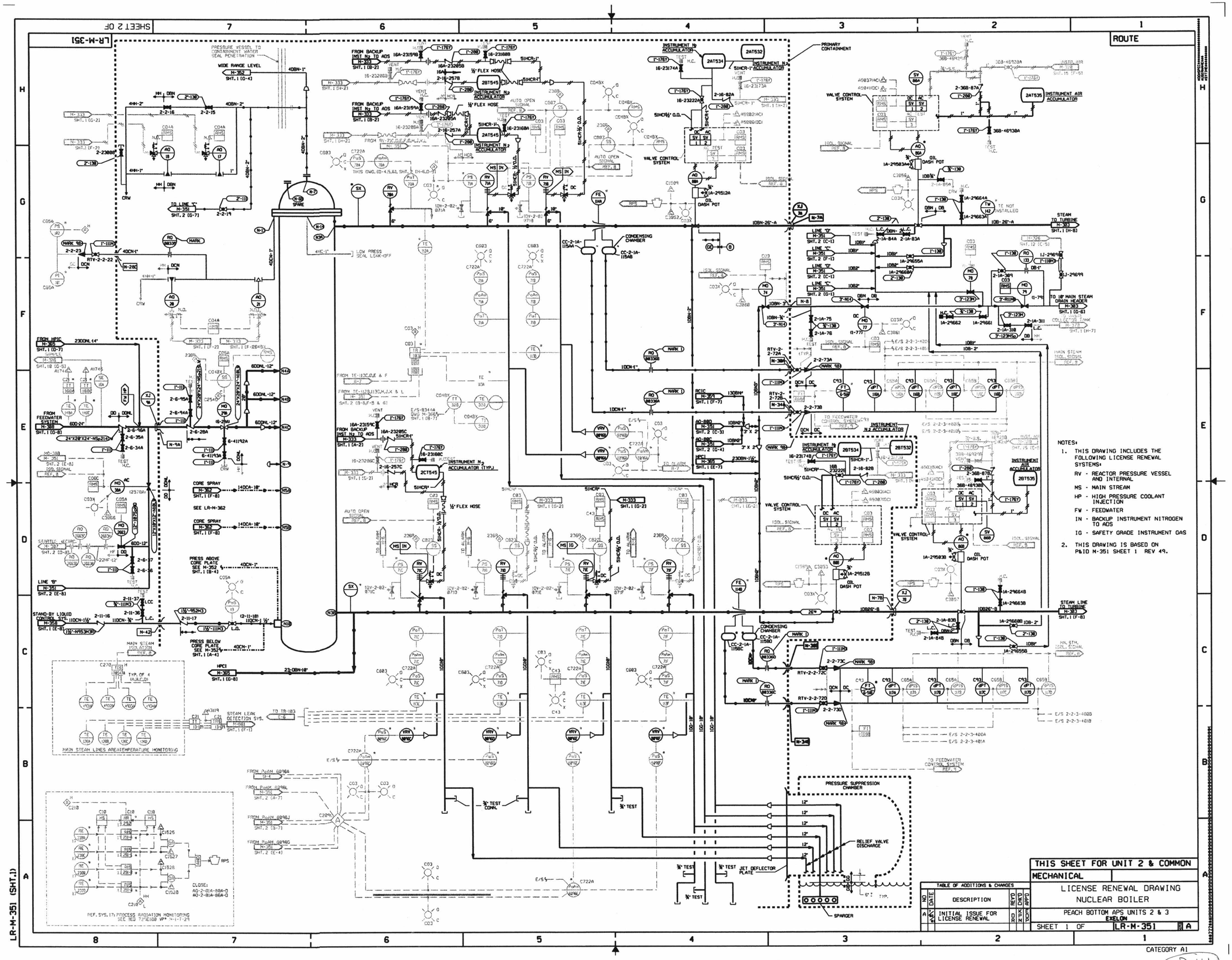

NOTES:

1. THIS DRAWING INCLUDES THE FOLLOWING LICENSE RENEWAL SYSTEMS:
   - RV - REACTOR PRESSURE VESSEL AND INTERNAL
   - MS - MAIN STREAM
   - HP - HIGH PRESSURE COOLANT INJECTION
   - FW - FEEDWATER
   - IN - BACKUP INSTRUMENT NITROGEN TO ADS
   - IG - SAFETY GRADE INSTRUMENT GAS
2. THIS DRAWING IS BASED ON P&ID M-351 SHEET 1 REV 49.

TABLE OF ADDITIONS & CHANGES

NO	DATE	DESCRIPTION	REV'D	CHK'D	APP'D
A	7/16/81	INITIAL ISSUE FOR LICENSE RENEWAL	DR	KPM	EDP

THIS SHEET FOR UNIT 2 & COMMON

MECHANICAL

LICENSE RENEWAL DRAWING
NUCLEAR BOILER

PEACH BOTTOM APS UNITS 2 & 3
EXELON

SHEET 1 OF LR-M-351 A

CATEGORY A1

D-41