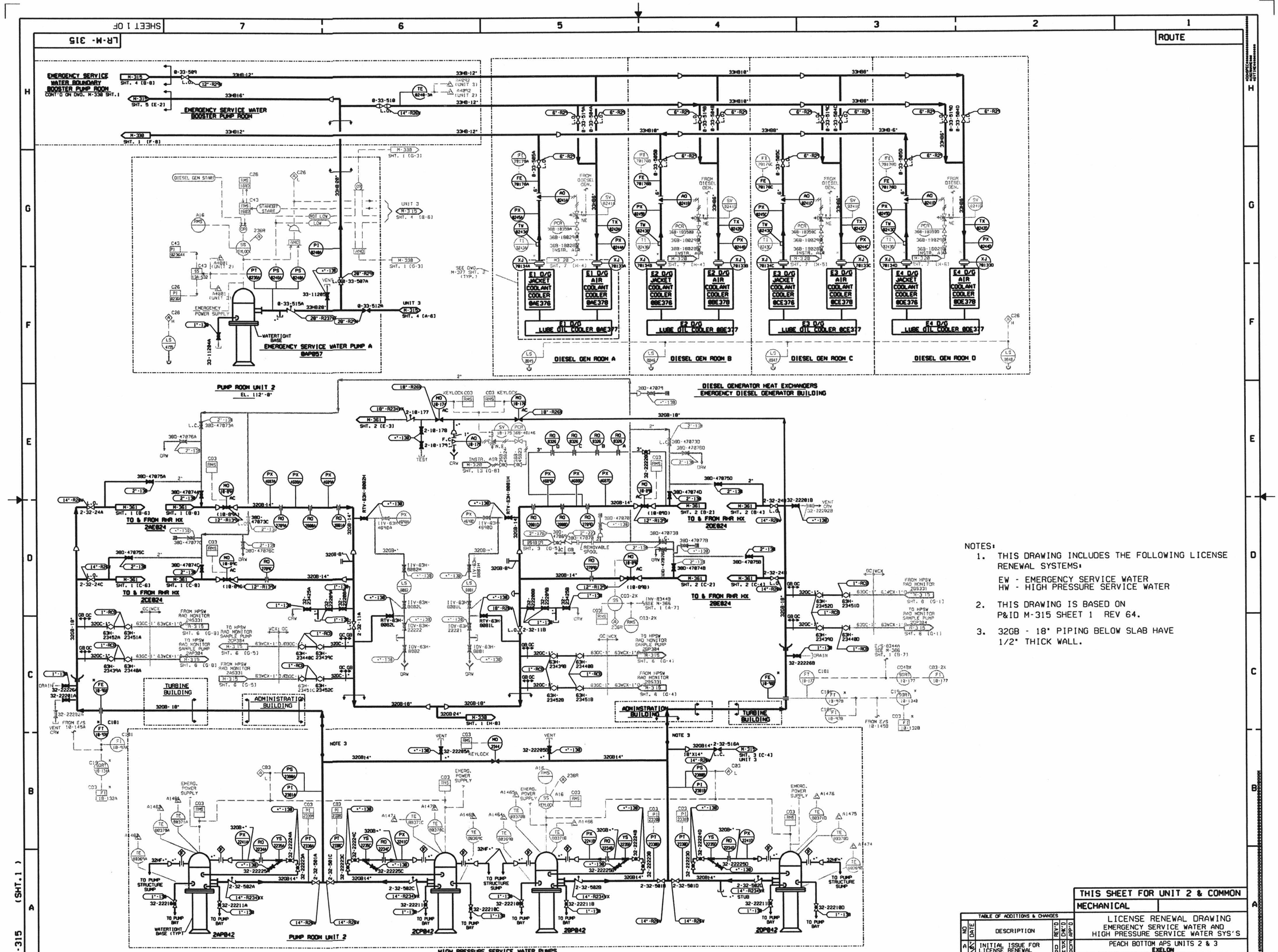
LR-M-315
SHEET 1 OF
ROUTE
EMERGENCY SERVICE WATER BOUNDARY BOOSTER PUMP ROOM
EMERGENCY SERVICE WATER BOOSTER PUMP ROOM
EMERGENCY SERVICE WATER PUMP A
DIESEL GEN ROOM A
DIESEL GEN ROOM B
DIESEL GEN ROOM C
DIESEL GEN ROOM D
DIESEL GENERATOR HEAT EXCHANGERS
EMERGENCY DIESEL GENERATOR BUILDING
PUMP ROOM UNIT 2
TO & FROM RHR HX
TURBINE BUILDING
ADMINISTRATION BUILDING
HIGH PRESSURE SERVICE WATER PUMPS
EL. 112'-0"
NOTES:
1. THIS DRAWING INCLUDES THE FOLLOWING LICENSE RENEWAL SYSTEMS:
EW - EMERGENCY SERVICE WATER
HW - HIGH PRESSURE SERVICE WATER
2. THIS DRAWING IS BASED ON P&ID M-315 SHEET 1 REV 64.
3. 32GB - 18" PIPING BELOW SLAB HAVE 1/2" THICK WALL.
THIS SHEET FOR UNIT 2 & COMMON
MECHANICAL
LICENSE RENEWAL DRAWING
EMERGENCY SERVICE WATER AND
HIGH PRESSURE SERVICE WATER SYS'S
PEACH BOTTOM APS UNITS 2 & 3
EXELON
SHEET 1 OF LR-M-315
TABLE OF ADDITIONS & CHANGES
NO DATE DESCRIPTION REV'D
A INITIAL ISSUE FOR LICENSE RENEWAL
CATEGORY A1
D-17