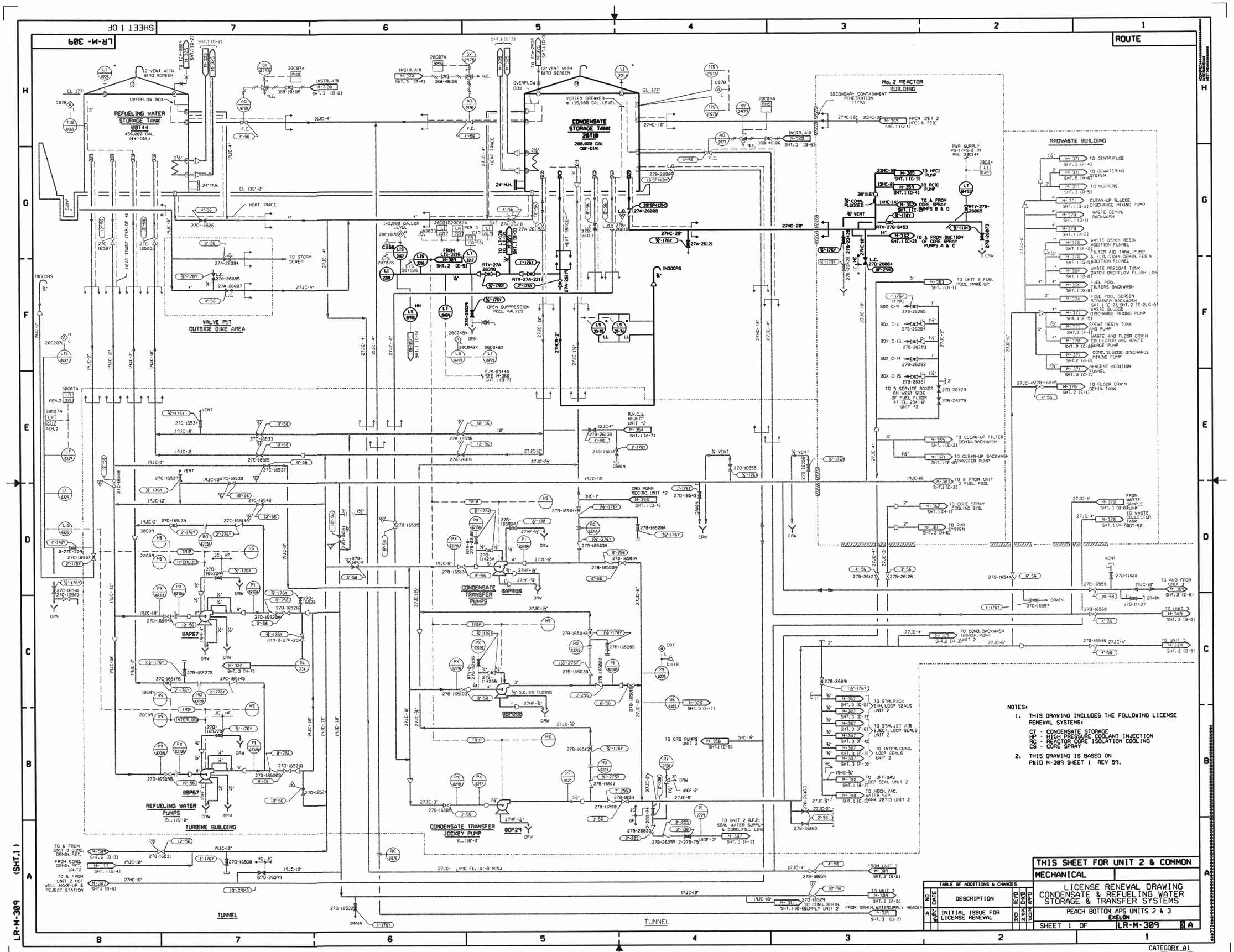
LR-M-309
SHEET 1 OF
ROUTE
REFUELING WATER STORAGE TANK
CONDENSATE STORAGE TANK
No. 2 REACTOR BUILDING
RADWASTE BUILDING
VALVE PIT OUTSIDE DIKE AREA
TURBINE BUILDING
TUNNEL
CONDENSATE TRANSFER PUMPS
CONDENSATE TRANSFER JOCKEY PUMP
REFUELING WATER PUMPS
NOTES:
1. THIS DRAWING INCLUDES THE FOLLOWING LICENSE RENEWAL SYSTEMS:
CT - CONDENSATE STORAGE
HP - HIGH PRESSURE COOLANT INJECTION
RC - REACTOR CORE ISOLATION COOLING
CS - CORE SPRAY
2. THIS DRAWING IS BASED ON P&ID M-309 SHEET 1 REV 59.
TABLE OF ADDITIONS & CHANGES
NO. DATE DESCRIPTION REV'D CHK'D APP'D
A INITIAL ISSUE FOR LICENSE RENEWAL
THIS SHEET FOR UNIT 2 & COMMON
MECHANICAL
LICENSE RENEWAL DRAWING
CONDENSATE & REFUELING WATER STORAGE & TRANSFER SYSTEMS
PEACH BOTTOM APS UNITS 2 & 3
EXELON
SHEET 1 OF LR-M-309 A
CATEGORY A1
D-15