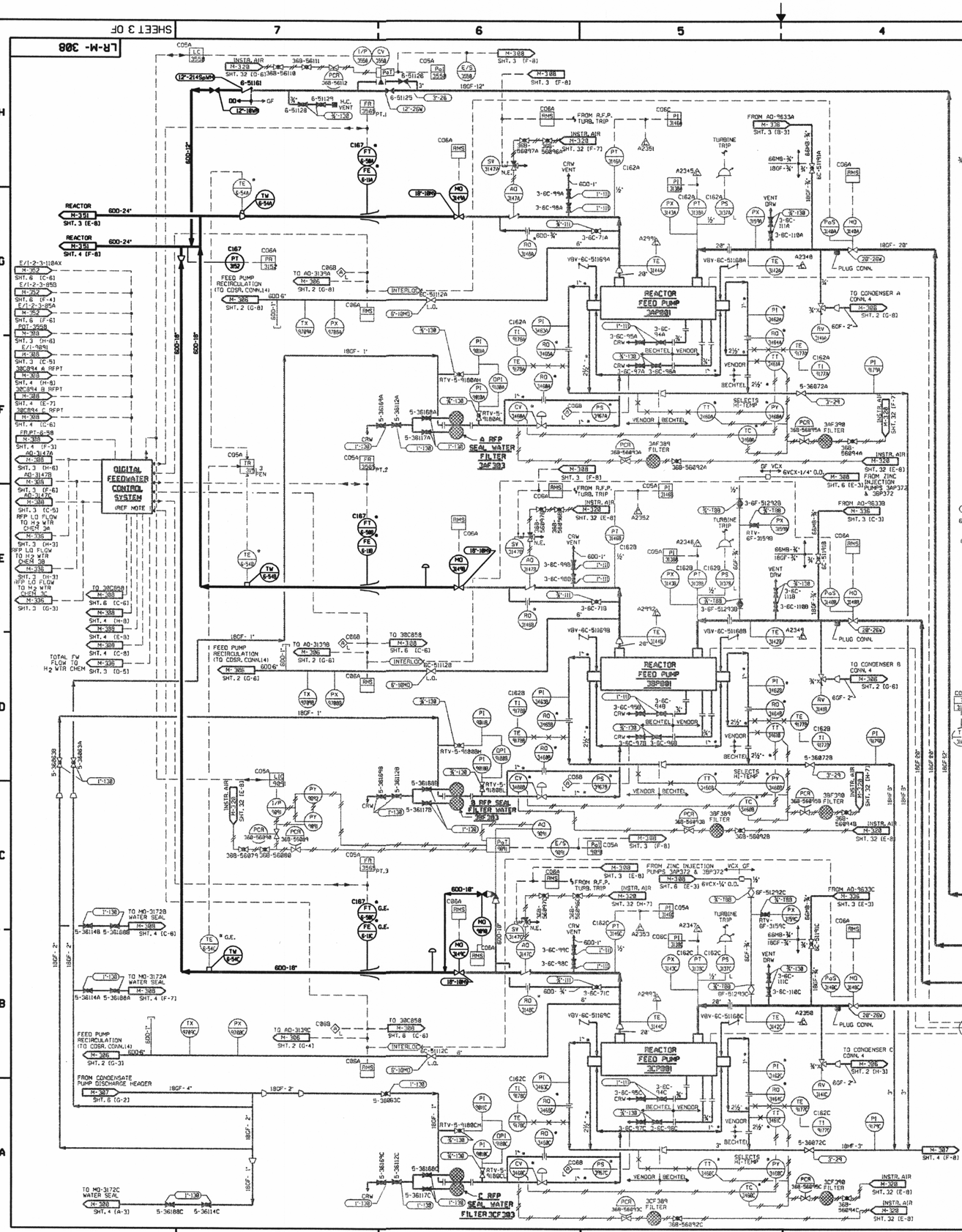

NOTES:

1. THIS DRAWING INCLUDES THE FOLLOWING LICENSE RENEWAL SYSTEMS:
   FW - FEEDWATER
2. THIS DRAWING IS BASED ON P&ID M-308 SHEET 3 REV 53.

TABLE OF ADDITIONS & CHANGES						
NO	DATE	DESCRIPTION	REVD	TECH	ENGR	APPD
A	4/4/5	INITIAL ISSUE FOR LICENSE RENEWAL	JRD			

THIS SHEET FOR UNIT 3 ONLY

MECHANICAL

LICENSE RENEWAL DRAWING
FEEDWATER & FEED PUMPS

PEACH BOTTOM APS UNITS 2 & 3
EXELON

SHEET 3 OF LR-M-308 A

CATEGORY A1

D-13