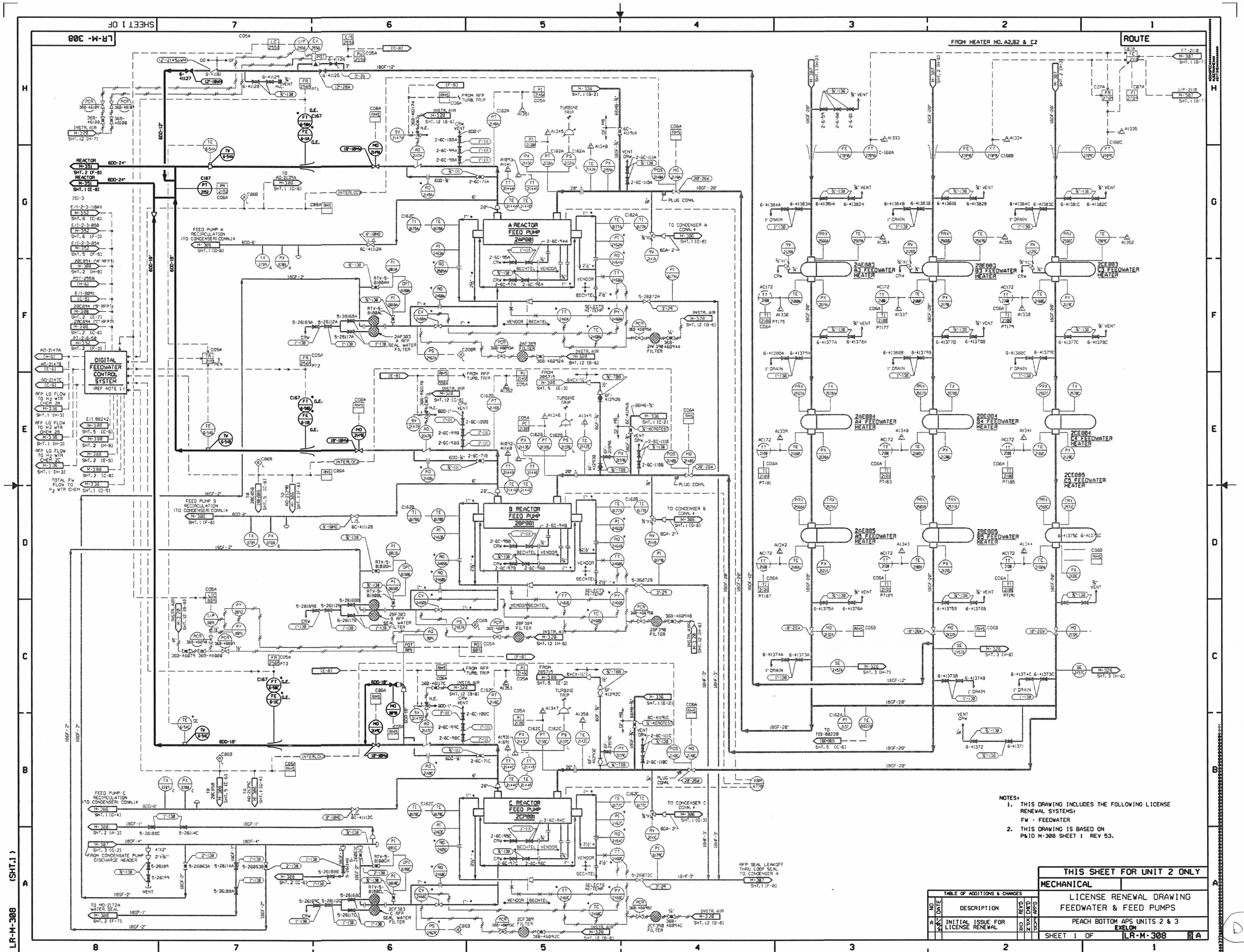

NOTES:
1. THIS DRAWING INCLUDES THE FOLLOWING LICENSE RENEWAL SYSTEMS:
   FW - FEEDWATER
2. THIS DRAWING IS BASED ON P&ID M-308 SHEET 1 REV 53.

TABLE OF ADDITIONS & CHANGES					
NO	DATE	DESCRIPTION	REV'D	CHK'D	APP'D
A	7/16/84	INITIAL ISSUE FOR LICENSE RENEWAL	DR	PM	EDP

THIS SHEET FOR UNIT 2 ONLY

MECHANICAL

LICENSE RENEWAL DRAWING
FEEDWATER & FEED PUMPS

PEACH BOTTOM APS UNITS 2 & 3
EXELON

SHEET 1 OF LR-M-308 A

D-11

CATEGORY A1