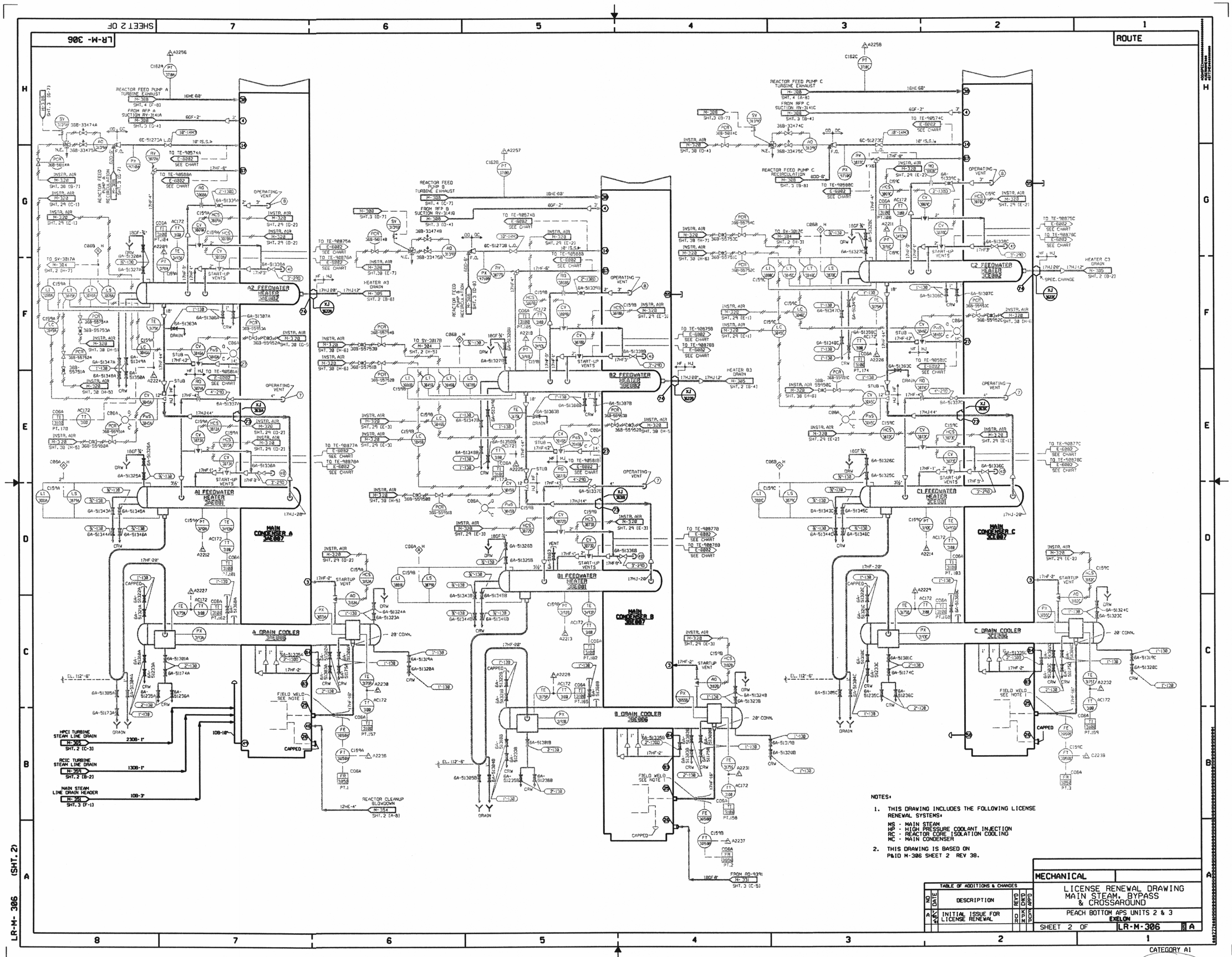

NOTES:

1. THIS DRAWING INCLUDES THE FOLLOWING LICENSE RENEWAL SYSTEMS:
   MS - MAIN STEAM
   HP - HIGH PRESSURE COOLANT INJECTION
   RC - REACTOR CORE ISOLATION COOLING
   MC - MAIN CONDENSER
2. THIS DRAWING IS BASED ON P&ID M-306 SHEET 2 REV 38.

TABLE OF ADDITIONS & CHANGES						
NO	DATE	DESCRIPTION	REV'D	CHK'D	APP'D	
A	7/6/	INITIAL ISSUE FOR LICENSE RENEWAL	DR	KPM	EDP	

MECHANICAL

LICENSE RENEWAL DRAWING
MAIN STEAM, BYPASS & CROSSAROUND

PEACH BOTTOM APS UNITS 2 & 3
EXELON

SHEET 2 OF LR-M-306 A

LR-M- 306 (SHT. 2)

CATEGORY A1

D-10