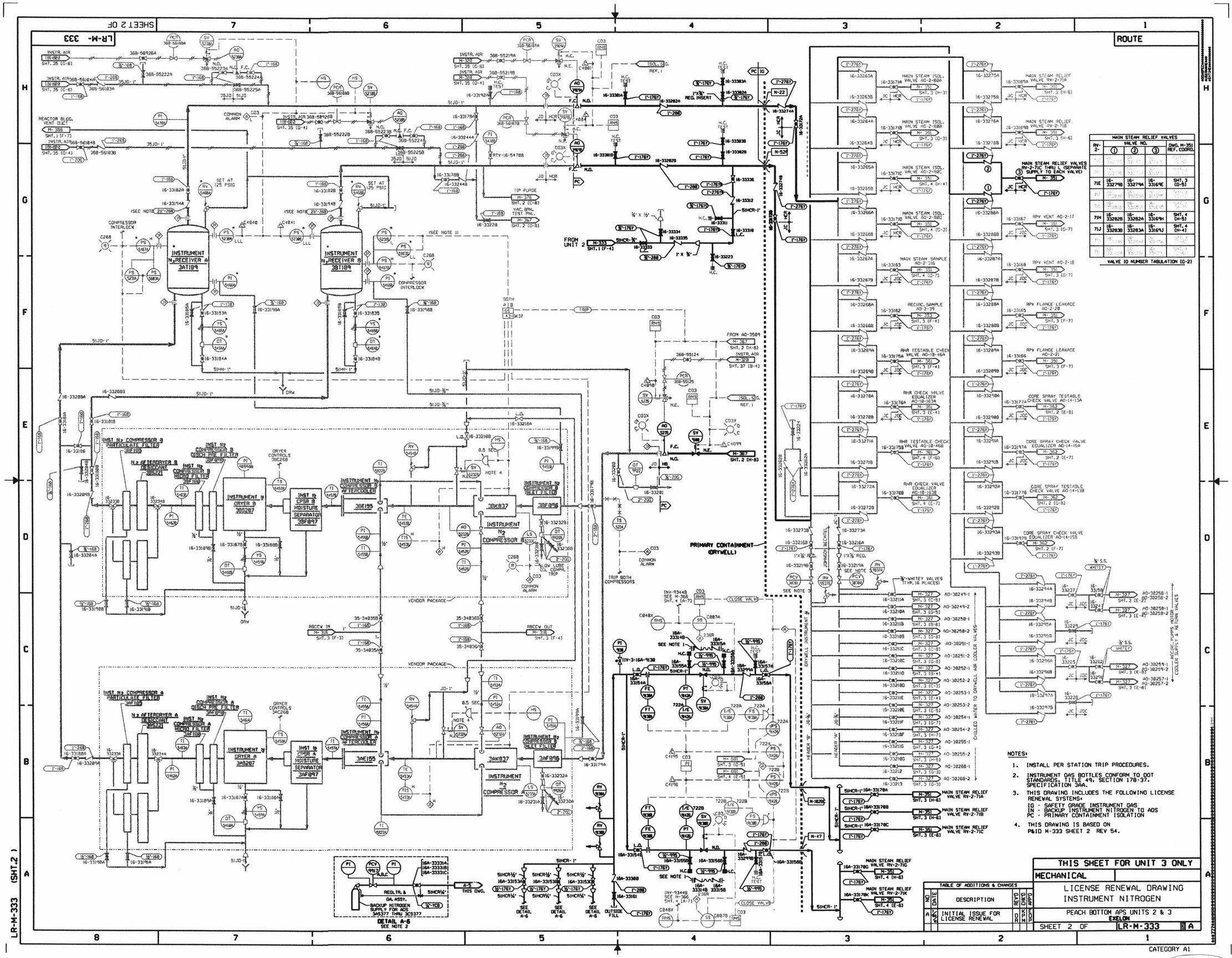
SHEET 2 OF
LR-M- 333
ROUTE
INSTRUMENT N2 RECEIVER A 3AT189
INSTRUMENT N2 RECEIVER B 3BT189
INST N2 COMPRESSOR B PARTICULATE FILTER
INST N2 COMPRESSOR B OIL MIST FILTER
INST N2 COMPRESSOR B HIGH FILTER
N2 AFTERDRYER B DESICCANT
INSTRUMENT N2 DRYER B
INST N2 COMPRESSOR B AFTERCOOLER
INSTRUMENT N2 COMPRESSOR
INST N2 COMPRESSOR A PARTICULATE FILTER
INST N2 COMPRESSOR A OIL MIST FILTER
INST N2 COMPRESSOR A HIGH FILTER
N2 AFTERDRYER A DESICCANT
INSTRUMENT N2 DRYER A
INST N2 COMPRESSOR A AFTERCOOLER
VENDOR PACKAGE
PRIMARY CONTAINMENT (DRYWELL)
DRYWELL INSTRUMENT N2
CHILLED WATER TO DRYWELL AIR COOLER VALVES
RECIRC. PUMPS MOTOR COOLER SUPPLY & RETURN VALVES
MAIN STEAM RELIEF VALVES
VALVE ID NUMBER TABULATION (G-2)
MAIN STEAM RELIEF VALVES RV-2-71C THRU L (SEPARATE SUPPLY TO EACH VALVE)
DETAIL A-6
SEE NOTE 2
REGLTR. & GA. ASSY.
BACKUP NITROGEN SUPPLY FOR ADS 3A9377 THRU 3C9377
NOTES:
1. INSTALL PER STATION TRIP PROCEDURES.
2. INSTRUMENT GAS BOTTLES CONFORM TO DOT STANDARDS, TITLE 49, SECTION 178-37, SPECIFICATION 3AA.
3. THIS DRAWING INCLUDES THE FOLLOWING LICENSE RENEWAL SYSTEMS:
IG - SAFETY GRADE INSTRUMENT GAS
IN - BACKUP INSTRUMENT NITROGEN TO ADS
PC - PRIMARY CONTAINMENT ISOLATION
4. THIS DRAWING IS BASED ON P&ID M-333 SHEET 2 REV 54.
THIS SHEET FOR UNIT 3 ONLY
MECHANICAL
LICENSE RENEWAL DRAWING
INSTRUMENT NITROGEN
PEACH BOTTOM APS UNITS 2 & 3
EXELON
SHEET 2 OF LR-M-333
TABLE OF ADDITIONS & CHANGES
INITIAL ISSUE FOR LICENSE RENEWAL
LR-M-333 (SHT.2)
CATEGORY A1
D-40