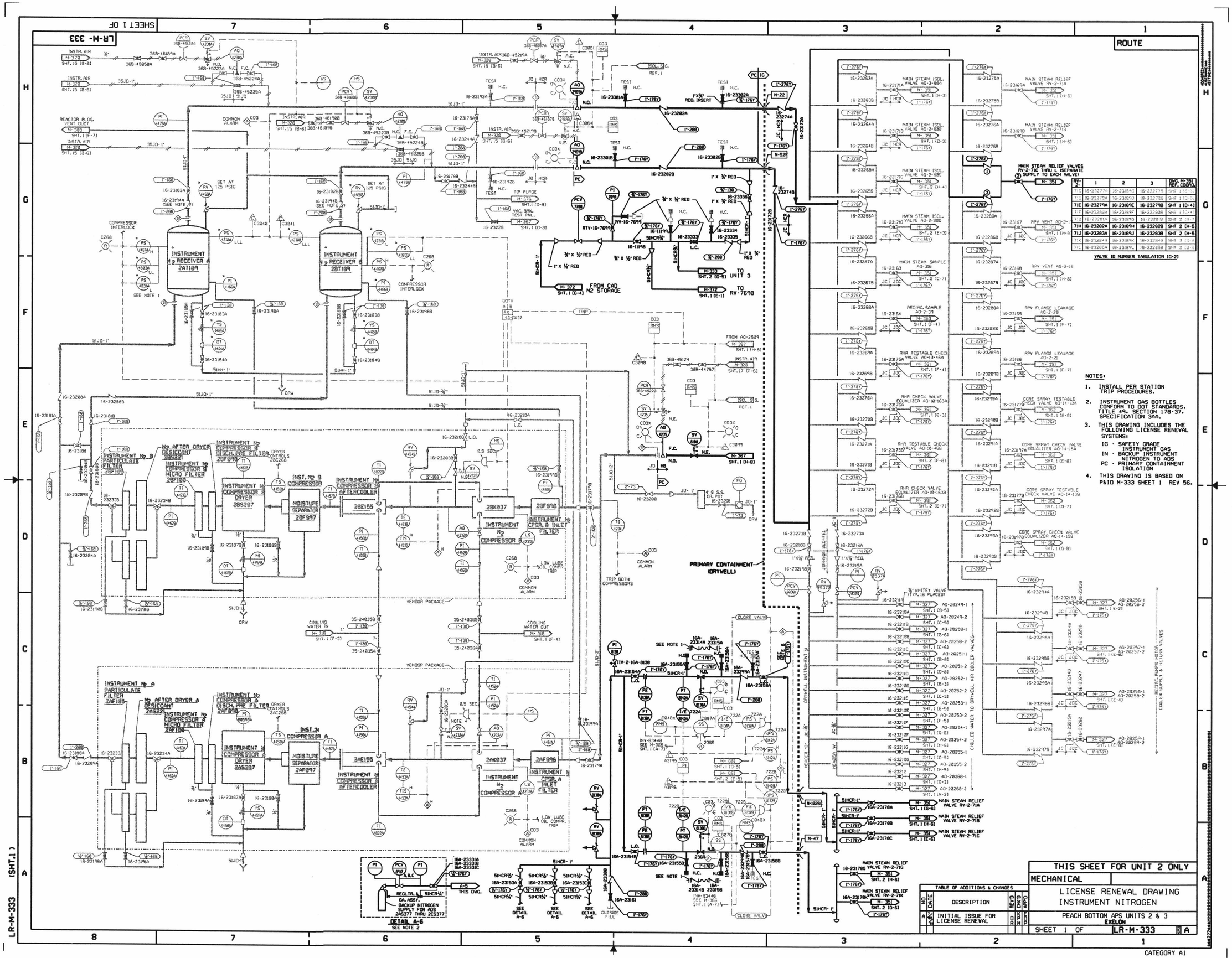

NOTES:

1. INSTALL PER STATION TRIP PROCEDURES.
2. INSTRUMENT GAS BOTTLES CONFORM TO DOT STANDARDS, TITLE 49, SECTION 178-37, SPECIFICATION 3AA.
3. THIS DRAWING INCLUDES THE FOLLOWING LICENSE RENEWAL SYSTEMS:
   - IG - SAFETY GRADE INSTRUMENT GAS
   - IN - BACKUP INSTRUMENT NITROGEN TO ADS
   - PC - PRIMARY CONTAINMENT ISOLATION
4. THIS DRAWING IS BASED ON P&ID M-333 SHEET 1 REV 56.

TABLE OF ADDITIONS & CHANGES					
NO	DATE	DESCRIPTION	REV'D	CHK'D	APP'D
A		INITIAL ISSUE FOR LICENSE RENEWAL	DR	KPM	PCP

THIS SHEET FOR UNIT 2 ONLY

MECHANICAL

LICENSE RENEWAL DRAWING
INSTRUMENT NITROGEN

PEACH BOTTOM APS UNITS 2 & 3
EXELON

SHEET 1 OF LR-M-333 A

CATEGORY A1

D-39