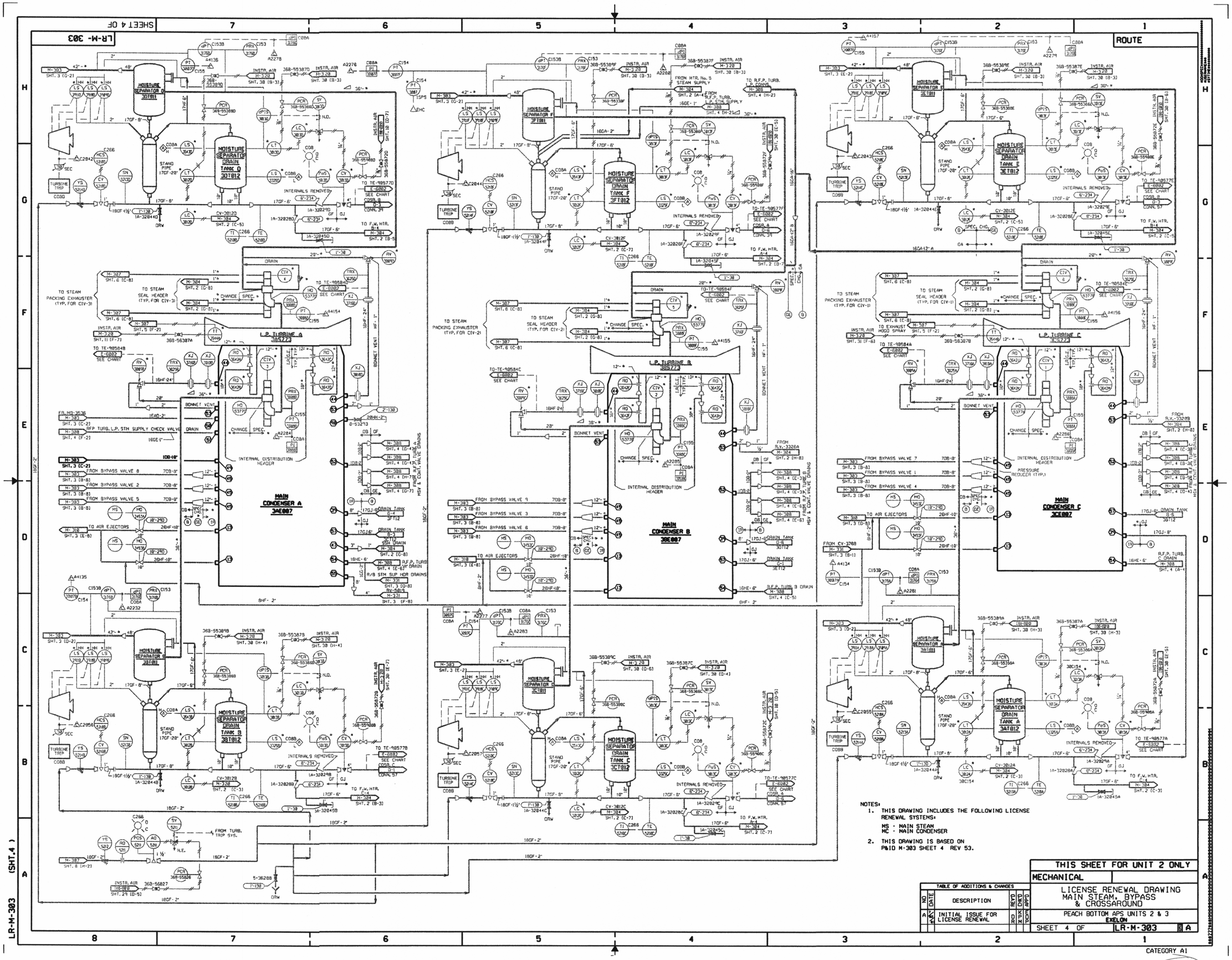

NOTES:

1. THIS DRAWING INCLUDES THE FOLLOWING LICENSE RENEWAL SYSTEMS:
   MS - MAIN STEAM
   MC - MAIN CONDENSER
2. THIS DRAWING IS BASED ON P&ID M-303 SHEET 4 REV 53.

TABLE OF ADDITIONS & CHANGES					
NO	DATE	DESCRIPTION	REV'D	CHK'D	APP'D
A	7/8/81	INITIAL ISSUE FOR LICENSE RENEWAL	DR	KPM	EDP

THIS SHEET FOR UNIT 2 ONLY

MECHANICAL

LICENSE RENEWAL DRAWING
MAIN STEAM, BYPASS & CROSSAROUND

PEACH BOTTOM APS UNITS 2 & 3
EXELON

SHEET 4 OF LR-M-303 A

LR-M-303 (SHT.4)

CATEGORY A1

D-8