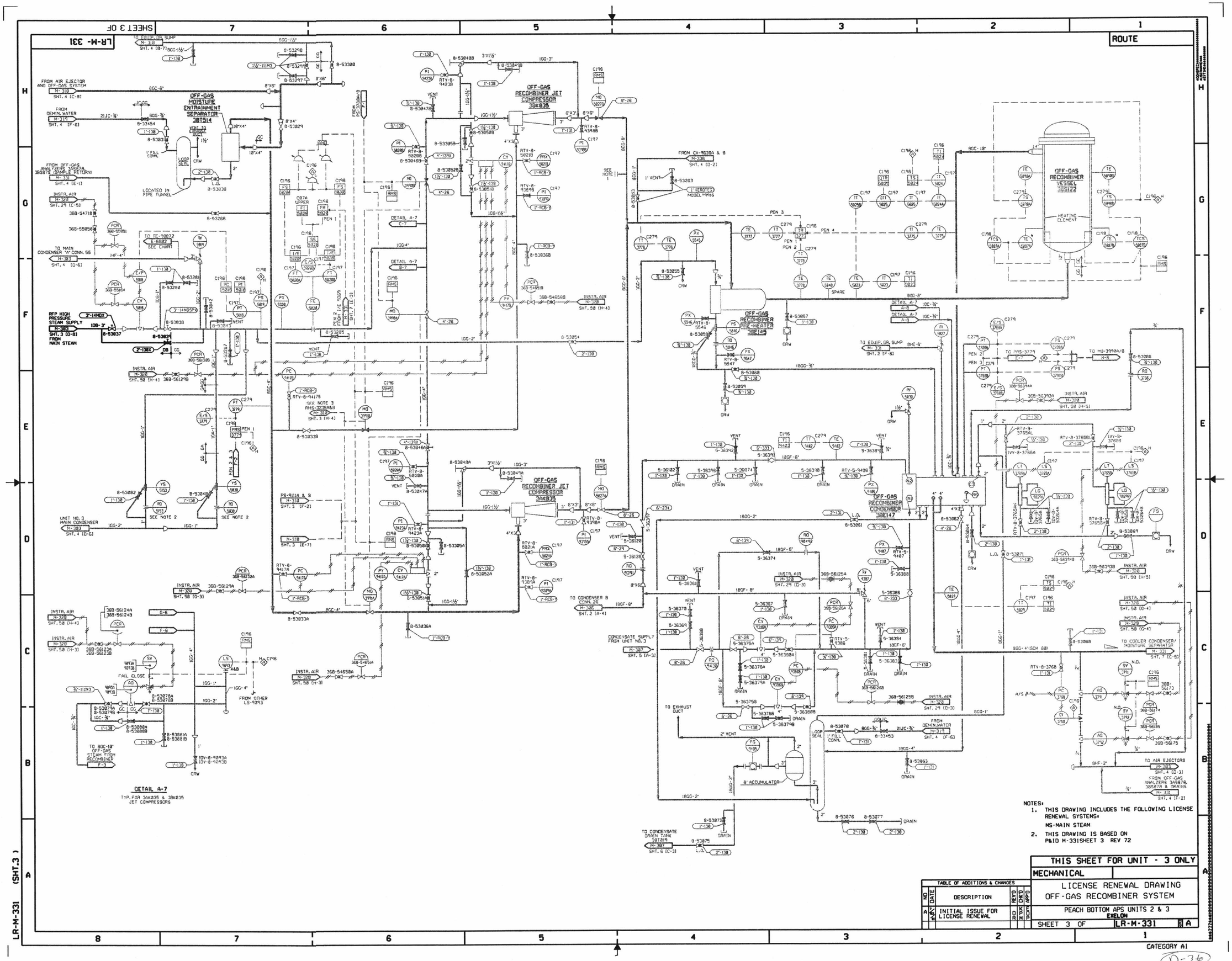

NOTES:

1. THIS DRAWING INCLUDES THE FOLLOWING LICENSE RENEWAL SYSTEMS:
   MS-MAIN STEAM
2. THIS DRAWING IS BASED ON P&ID M-331SHEET 3 REV 72

TABLE OF ADDITIONS & CHANGES					
NO	DATE	DESCRIPTION	REV'D	CHK'D	APP'D
A	7/9/92	INITIAL ISSUE FOR LICENSE RENEWAL	DR	KPM	FCP

THIS SHEET FOR UNIT - 3 ONLY

MECHANICAL

LICENSE RENEWAL DRAWING
OFF-GAS RECOMBINER SYSTEM

PEACH BOTTOM APS UNITS 2 & 3
EXELON

SHEET 3 OF LR-M-331 A

LR-M-331 (SHT.3)

CATEGORY A1

D-36