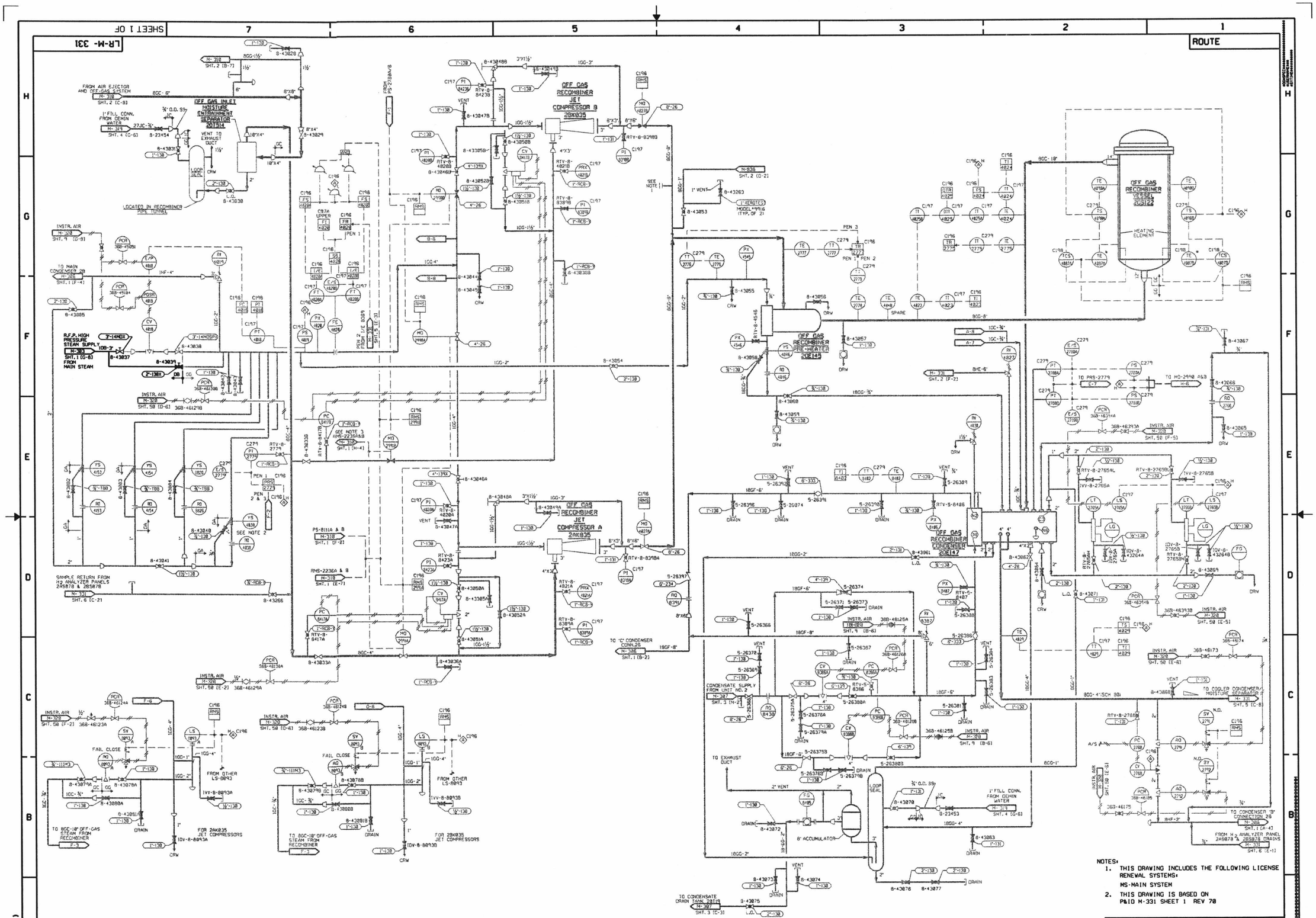

NOTES:

1. THIS DRAWING INCLUDES THE FOLLOWING LICENSE RENEWAL SYSTEMS:
   MS-MAIN SYSTEM
2. THIS DRAWING IS BASED ON P&ID M-331 SHEET 1 REV 70

THIS SHEET FOR UNIT 2 ONLY

MECHANICAL

LICENSE RENEWAL DRAWING
OFF-GAS RECOMBINER SYSTEM

PEACH BOTTOM APS UNITS 2 & 3
EXELON

SHEET 1 OF LR-M-331 A

TABLE OF ADDITIONS & CHANGES

NO	DATE	DESCRIPTION	REV'D	CHK'D	APP'D
A	7/8/96	INITIAL ISSUE FOR LICENSE RENEWAL	DR	KPM	EDP

LR-M-331 (SHT.1)

CATEGORY A1

D-35