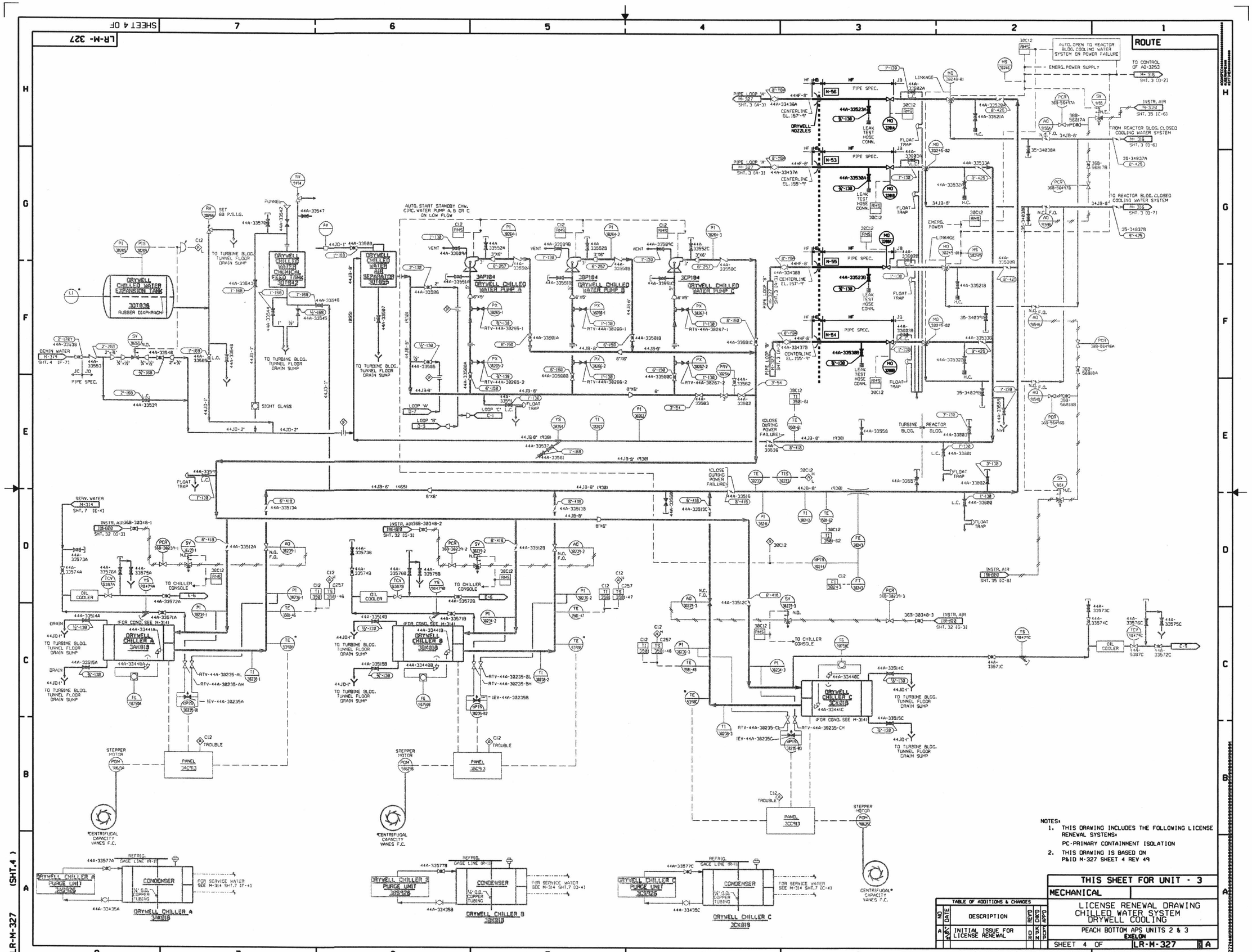

NOTES:
1. THIS DRAWING INCLUDES THE FOLLOWING LICENSE RENEWAL SYSTEMS:
   PC-PRIMARY CONTAINMENT ISOLATION
2. THIS DRAWING IS BASED ON P&ID M-327 SHEET 4 REV 49

TABLE OF ADDITIONS & CHANGES					
NO	DATE	DESCRIPTION	REV'D	CHK'D	APP'D
A	7/5/84	INITIAL ISSUE FOR LICENSE RENEWAL	DR	KPM	EDC

THIS SHEET FOR UNIT - 3

MECHANICAL

LICENSE RENEWAL DRAWING
CHILLED WATER SYSTEM
DRYWELL COOLING

PEACH BOTTOM APS UNITS 2 & 3
EXELON

SHEET 4 OF LR-M-327 A

LR-M-327 (SHT.4)

CATEGORY A1

D-33