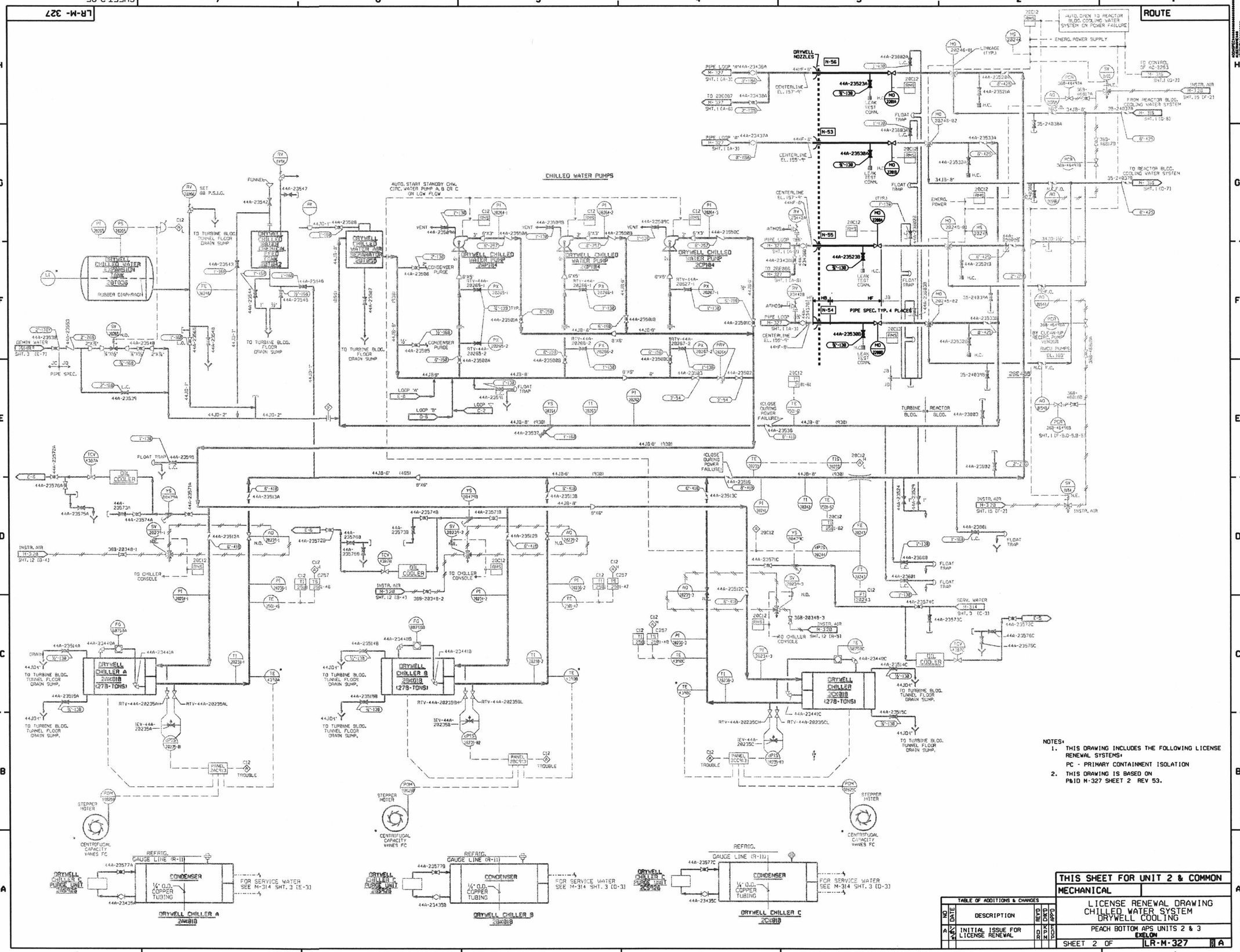

NOTES:
1. THIS DRAWING INCLUDES THE FOLLOWING LICENSE RENEWAL SYSTEMS:
   PC - PRIMARY CONTAINMENT ISOLATION
2. THIS DRAWING IS BASED ON P&ID M-327 SHEET 2 REV 53.

TABLE OF ADDITIONS & CHANGES					
NO	DATE	DESCRIPTION	REV'D	CHK'D	APP'D
A	2/8/	INITIAL ISSUE FOR LICENSE RENEWAL	DR	KPM	EDP

THIS SHEET FOR UNIT 2 & COMMON

MECHANICAL

LICENSE RENEWAL DRAWING
CHILLED WATER SYSTEM
DRYWELL COOLING

PEACH BOTTOM APS UNITS 2 & 3
EXELON

SHEET 2 OF LR-M-327 A

LR-M-327 (SHT.2)

CATEGORY A1

D-32