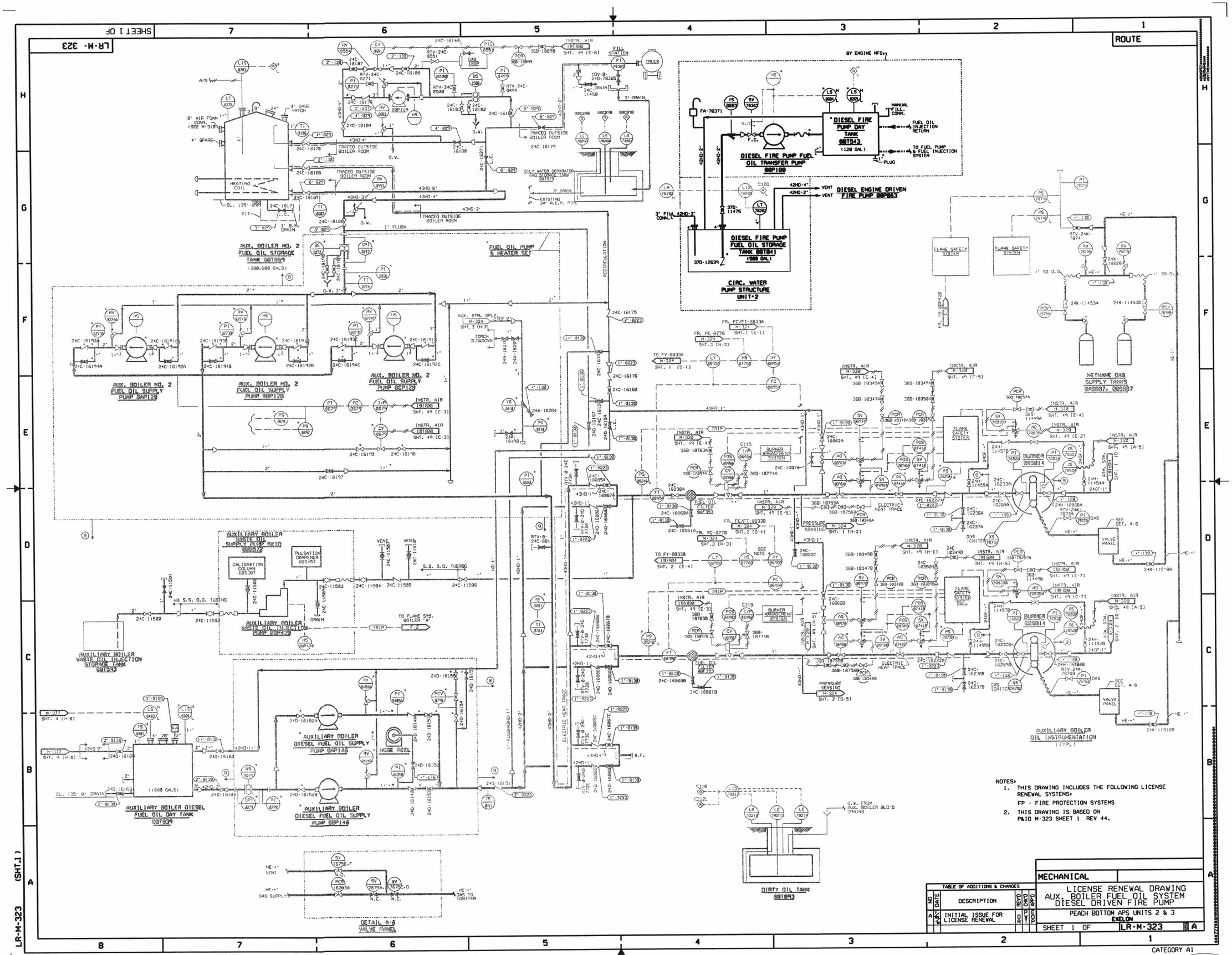

LR-M-323
SHEET 1 OF
ROUTE
AUX. BOILER NO. 2 FUEL OIL STORAGE TANK 00T089
(200,000 GALS)
FUEL OIL PUMP & HEATER SET
AUX. BOILER NO. 2 FUEL OIL SUPPLY PUMP 0AP120
AUX. BOILER NO. 2 FUEL OIL SUPPLY PUMP 0BP120
AUX. BOILER NO. 2 FUEL OIL SUPPLY PUMP 0CP120
AUXILIARY BOILER WASTE OIL INJECTION STORAGE TANK 00T593
AUXILIARY BOILER WASTE OIL INJECTION PUMP 00P420
AUXILIARY BOILER DIESEL FUEL OIL DAY TANK 00T039
AUXILIARY BOILER DIESEL FUEL OIL SUPPLY PUMP 0AP146
AUXILIARY BOILER DIESEL FUEL OIL SUPPLY PUMP 0BP146
DETAIL A-6 VALVE PANEL
DIESEL FIRE PUMP DAY TANK 00T543
(120 GAL)
DIESEL FIRE PUMP FUEL OIL TRANSFER PUMP 00P180
DIESEL FIRE PUMP FUEL OIL STORAGE TANK 00T041
(500 GAL)
CIRC. WATER PUMP STRUCTURE UNIT-2
DIESEL ENGINE DRIVEN FIRE PUMP 00P063
METHANE GAS SUPPLY TANKS 0AS007, 0BS007
BURNER 0AS014
BURNER 0BS014
AUXILIARY BOILER OIL INSTRUMENTATION (TYP.)
DIRTY OIL TANK 00T093
NOTES:
1. THIS DRAWING INCLUDES THE FOLLOWING LICENSE RENEWAL SYSTEMS:
FP - FIRE PROTECTION SYSTEMS
2. THIS DRAWING IS BASED ON P&ID M-323 SHEET 1 REV 44.
MECHANICAL
LICENSE RENEWAL DRAWING
AUX. BOILER FUEL OIL SYSTEM
DIESEL DRIVEN FIRE PUMP
PEACH BOTTOM APS UNITS 2 & 3
EXELON
SHEET 1 OF
LR-M-323
A
TABLE OF ADDITIONS & CHANGES
NO
DATE
DESCRIPTION
REV'D
CHK'D
APP'D
A
INITIAL ISSUE FOR LICENSE RENEWAL
DR
PWT
EDP
LR-M-323 (SHT.1)
CATEGORY A1
D-31