6.2 SPENT FUEL LOADING

~~The analyses presented in this section are taken directly from the HI-STAR applications (USNRC Docket Numbers 72-1008 and 71-9261). Because the MPC designs are identical, these analyses are applicable to the HI-TRAC transfer cask and the HI-STORM storage overpack.~~

Specifications for the BWR and PWR fuel assemblies that were analyzed are given in Tables 6.2.1 and 6.2.2, respectively. For the BWR fuel characteristics, the number and dimensions for the water rods are the actual number and dimensions. For the PWR fuel characteristics, the actual number and dimensions of the control rod guide tubes and thimbles are used. Table 6.2.1 lists *72*~~56~~ unique BWR assemblies while Table 6.2.2 lists *46*~~41~~ unique PWR assemblies, all of which were explicitly analyzed for this evaluation. Examination of Tables 6.2.1 and 6.2.2 reveals that there are a large number of minor variations in fuel assembly dimensions.

Due to the large number of minor variations in the fuel assembly dimensions, the use of explicit dimensions in the ~~Technical Specifications~~*Certificate of Compliance* could limit the applicability of the HI-STORM 100 System. To resolve this limitation, bounding criticality analyses are presented in this section for a number of defined fuel assembly classes for both fuel types (PWR and BWR). The results of the bounding criticality analyses justify using bounding ~~Technical Specifications for~~ fuel dimensions, as defined in ~~Chapter 12~~*the Certificate of Compliance*.

6.2.1 Definition of Assembly Classes

For each array size (e.g., 6x6, 7x7, 15x15, etc.), the fuel assemblies have been subdivided into a number of defined classes, where a class is defined in terms of (1) the number of fuel rods; (2) pitch; (3) number and locations of guide tubes (PWR) or water rods (BWR); and (4) cladding material. The assembly classes for BWR and PWR fuel are defined in Tables 6.2.1 and 6.2.2, respectively. It should be noted that these assembly classes are unique to this evaluation and are not known to be consistent with any class designations in the open literature.

For each assembly class, calculations have been performed for all of the dimensional variations for which data is available (i.e., all data in Tables 6.2.1 and 6.2.2). These calculations demonstrate that the maximum reactivity corresponds to:

- maximum active fuel length,
- maximum fuel pellet diameter,
- minimum cladding outside diameter (OD),
- maximum cladding inside diameter (ID),
- minimum guide tube/water rod thickness, and
- maximum channel thickness (for BWR assemblies only).

Therefore, for each assembly class, a bounding assembly was defined based on the above characteristics and a calculation for the bounding assembly was performed to demonstrate

compliance with the regulatory requirement of k_{eff} < 0.95. In some assembly classes this bounding assembly corresponds directly to one of the actual (real) assemblies; while in most assembly classes, the bounding assembly is artificial (i.e., based on bounding dimensions from more than one of the actual assemblies). In classes where the bounding assembly is artificial, the reactivity of the actual (real) assemblies is typically much less than that of the bounding assembly; thereby providing additional conservatism. As a result of these analyses, the ~~Technical Specifications~~*Certificate of Compliance* will define acceptability in terms of the bounding assembly parameters for each class.

To demonstrate that the aforementioned characteristics are bounding, a parametric study was performed for a reference BWR assembly, designated herein as 8x8C04 (identified generally as a GE8x8R). *Additionally, parametric studies were performed for a PWR assembly (the 15x15F assembly class) in the MPC-24 and MPC-32 with soluble boron in the water flooding the MPC.* The results of th~~ese~~ stud~~y~~*ies* are shown in Table 6.2.3 *through 6.2.5*, and verify the positive reactivity effect associated with (1) increasing the pellet diameter, (2) maximizing the cladding ID (while maintaining a constant cladding OD), (3) minimizing the cladding OD (while maintaining a constant cladding ID), (4) decreasing the water rod*/guide tube* thickness, (5) artificially replacing the Zircaloy water rod tubes*/guide tubes* with water, and (6) maximizing the channel thickness *(for BWR Assemblies)*. These results, and the many that follow, justify the approach for using bounding dimensions in the ~~Technical Specifications of Chapter 12~~*Certificate of Compliance*. Where margins permit, the Zircaloy water rod tubes (BWR assemblies) are artificially replaced by water in the bounding cases to remove the requirement for water rod thickness from the ~~Technical Specifications~~*Certificate of Compliance. As these studies were performed with and without soluble boron, they also demonstrate that the bounding dimensions are valid independent of the soluble boron concentration.*

As mentioned, the bounding approach used in these analyses often results in a maximum k_{eff} value for a given class of assemblies that is much greater than the reactivity of any of the actual (real) assemblies within the class, and yet, is still below the 0.95 regulatory limit.

6.2.2 *Intact* PWR Fuel Assemblies ~~in the MPC-24~~

6.2.2.1 *Intact PWR Fuel Assemblies in the MPC-24 without Soluble Boron*

For PWR fuel assemblies (specifications listed in Table 6.2.2) the 15x15F01 fuel assembly at 4.1% enrichment has the highest reactivity (maximum k_{eff} of 0.9478). The 17x17A01 assembly (otherwise known as a Westinghouse 17x17 OFA) has a similar reactivity (see Table 6.2.*20*~~16~~) and was used throughout this criticality evaluation as a reference PWR assembly. The 17x17A01 assembly is a representative PWR fuel assembly in terms of design and reactivity and is useful for the reactivity studies presented in Sections 6.3 and 6.4. Calculations for the various PWR fuel assemblies in the MPC-24 are summarized in Tables 6.2.*64* through 6.2.*22*~~18~~ for the fully flooded condition *without soluble boron in the water.*

Tables 6.2.*64* through 6.2.*22*~~18~~ show the maximum k_{eff} values for the assembly classes that are acceptable for storage in the MPC-24. All maximum k_{eff} values include the bias, uncertainties, and calculational statistics, evaluated for the worst combination of manufacturing tolerances. All calculations for the MPC-24 were performed for a ^{10}B loading of 0.020 g/cm^2, which is 75% of the minimum loading, 0.0267 g/cm^2, specified on BM-1478, Bill of Materials for 24-Assembly HI-STAR 100 PWR MPC, in Section 1.5. The maximum allowable enrichment in the MPC-24 varies from *3.8*~~4.0~~ to ~~4.6~~*5.0* wt% ^{235}U, depending on the assembly class, and is defined in Tables 6.2.*64* through 6.2.*22*~~18~~. It should be noted that the maximum allowable enrichment does not vary within an assembly class. Table 6.1.1 summarizes the maximum allowable enrichments for each of the assembly classes that are acceptable for storage in the MPC-24.

Tables 6.2.*64* through 6.2.*22*~~18~~ are formatted with the assembly class information in the top row, the unique assembly designations, dimensions, and k_{eff} values in the following rows above the bold double lines, and the bounding dimensions selected for the ~~Technical Specifications~~*Certificate of Compliance* and corresponding bounding k_{eff} values in the final rows. Where the bounding assembly corresponds directly to one of the actual assemblies, the fuel assembly designation is listed in the bottom row in parentheses (e.g., Table 6.2.*64*). Otherwise, the bounding assembly is given a unique designation. For an assembly class that contains only a single assembly (e.g., 14x14D, see Table 6.2.*9*~~7~~), the ~~Technical Specification~~ dimensions *listed in the Certificate of Compliance* are based on the assembly dimensions from that single assembly. All of the maximum k_{eff} values corresponding to the selected bounding dimensions are greater than or equal to those for the actual assembly dimensions and are below the 0.95 regulatory limit.

The results of the analyses for the MPC-24, which were performed for all assemblies in each class (see Tables 6.2.6 through 6.2.22), further confirm the validity of the bounding dimensions established in Section 6.2.1. Thus, for all following calculations, namely analyses of the MPC-24E, MPC-32, and MPC-24 with soluble boron present in the water, only the bounding assembly in each class is analyzed.

6.2.2.2 Intact PWR Fuel Assemblies in the MPC-24 with Soluble Boron

Additionally, the HI-STAR 100 system is designed to allow credit for the soluble boron typically present in the water of PWR spent fuel pools. For a minimum soluble boron concentration of 400ppm, the maximum allowable fuel enrichment is 5.0 wt% ^{235}U for all assembly classes identified in Tables 6.2.6 through 6.2.22. Table 6.1.2 shows the maximum k_{eff} for the bounding assembly in each assembly class. All maximum k_{eff} values are below the 0.95 regulatory limit. The 15x15H assembly class has the highest reactivity (maximum k_{eff} of 0.9447). The calculated k_{eff} and calculational uncertainty for each class is listed in Appendix 6.C.

6.2.2.3 Intact PWR Assemblies in the MPC-24E and MPC-24EF with and without Soluble Boron

The MPC-24E and MPC-24EF are variations of the MPC-24, which provide for storage of higher enriched fuel than the MPC-24 through optimization of the storage cell layout. The

MPC-24E and MPC-24EF also allow for the loading of up to 4 PWR Damaged Fuel Containers (DFC) with damaged PWR fuel (MPC-24E and MPC–24EF) and PWR fuel debris (MPC-24EF only). The requirements for damaged fuel and fuel debris in the MPC-24E and MPC-24EF are discussed in Section 6.2.4.3.

Without credit for soluble boron, the maximum allowable fuel enrichment varies between 4.2 and 5.0 wt% ^{235}U, depending on the assembly classes as identified in Tables 6.2.6 through 6.2.22. The maximum allowable enrichment for each assembly class is listed in Table 6.1.3, together with the maximum k_{eff} for the bounding assembly in the assembly class. All maximum k_{eff} values are below the 0.95 regulatory limit The 15x15F assembly class at 4.5% enrichment has the highest reactivity (maximum k_{eff} of 0.9468). The calculated k_{eff} and calculational uncertainty for each class is listed in Appendix 6.C.

For a minimum soluble boron concentration of 300ppm, the maximum allowable fuel enrichment is 5.0 wt% ^{235}U for all assembly classes identified in Tables 6.2.6 through 6.2.22. Table 6.1.4 shows the maximum k_{eff} for the bounding assembly in each assembly class. All maximum k_{eff} values are below the 0.95 regulatory limit. The 15x15H assembly class has the highest reactivity (maximum k_{eff} of 0.9399). The calculated k_{eff} and calculational uncertainty for each class is listed in Appendix 6.C.

6.2.2.4 Intact PWR Assemblies in the MPC-32

When loading any PWR fuel assembly in the MPC-32, a minimum soluble boron concentration is required.

For a minimum soluble boron concentration of 1900ppm, the maximum allowable fuel enrichment is 4.1 wt% ^{235}U for all assembly classes identified in Tables 6.2.6 through 6.2.22. Table 6.1.5 shows the maximum k_{eff} for the bounding assembly in each assembly class. All maximum k_{eff} values are below the 0.95 regulatory limit. The 15x15F assembly class has the highest reactivity (maximum k_{eff} of 0.9411). The calculated k_{eff} and calculational uncertainty for each class is listed in Appendix 6.C.

For a minimum soluble boron concentration of 2600ppm, the maximum allowable fuel enrichment is 5.0 wt% ^{235}U for all assembly classes identified in Tables 6.2.6 through 6.2.22. Table 6.1.6 shows the maximum k_{eff} for the bounding assembly in each assembly class. All maximum k_{eff} values are below the 0.95 regulatory limit. The 15x15F assembly class has the highest reactivity (maximum k_{eff} of 0.9483). The calculated k_{eff} and calculational uncertainty for each class is listed in Appendix 6.C.

6.2.3 *Intact* BWR Fuel Assemblies in the MPC-68 *and MPC-68FF*

For BWR fuel assemblies (specifications listed in Table 6.2.1) the artificial bounding assembly for the 10x10A assembly class at 4.2% enrichment has the highest reactivity (maximum k_{eff} of

0.9457). Calculations for the various BWR fuel assemblies in the MPC-68 *and MPC-68FF* are summarized in Tables 6.2.*23*~~19~~ through 6.2.*40*~~34~~ for the fully flooded condition. In all cases, the gadolinia (Gd_2O_3) normally incorporated in BWR fuel was conservatively neglected.

For calculations involving BWR assemblies, the use of a uniform (planar-average) enrichment, as opposed to the distributed enrichments normally used in BWR fuel, produces conservative results. Calculations confirming this statement are presented in Appendix 6.B[‡] for several representative BWR fuel assembly designs. These calculations justify the specification of planar-average enrichments to define acceptability of BWR fuel for loading into the MPC-68.

Tables 6.2.*23*~~19~~ through 6.2.*40*~~34~~ show the maximum k_{eff} values for assembly classes that are acceptable for storage in the MPC-68 *and MPC-68FF*. All maximum k_{eff} values include the bias, uncertainties, and calculational statistics, evaluated for the worst combination of manufacturing tolerances. With the exception of assembly classes 6x6A, 6x6B, 6x6C, 7x7A, and 8x8A, which will be discussed in Section 6.2.4, all calculations for the MPC-68 *and MPC-68FF* were performed with a ^{10}B loading of 0.0279 g/cm^2, which is 75% of the minimum loading, 0.0372 g/cm^2, specified on BM-1479, Bill of Materials for 68-Assembly HI-STAR 100 BWR MPC, in Section 1.5. Calculations for assembly classes 6x6A, 6x6B, 6x6C, 7x7A, and 8x8A were conservatively performed with a ^{10}B loading of 0.0067 g/cm^2. The maximum allowable enrichment in the MPC-68 *and MPC-68FF* varies from 2.7 to 4.2 wt% ^{235}U, depending on the assembly class. It should be noted that the maximum allowable enrichment does not vary within an assembly class. Table 6.1.*7*~~2~~ summarizes the maximum allowable enrichments for all assembly classes that are acceptable for storage in the MPC-68 *and MPC-68FF*.

Tables 6.2.*23*~~19~~ through 6.2.~~3~~*440* are formatted with the assembly class information in the top row, the unique assembly designations, dimensions, and k_{eff} values in the following rows above the bold double lines, and the bounding dimensions selected for the ~~Technical Specifications~~*Certificate of Compliance* and corresponding bounding k_{eff} values in the final rows. Where an assembly class contains only a single assembly (e.g., 8x8E, see Table 6.2.27~~3~~), the ~~Technical Specification~~ dimensions *listed in the Certificate of Compliance* are based on the assembly dimensions from that single assembly. For assembly classes that are suspected to contain assemblies with thicker channels (e.g., 120 mils), bounding calculations are also performed to qualify the thicker channels (e.g. 7x7B, see Table 6.2.*23*~~19~~). All of the maximum k_{eff} values corresponding to the selected bounding dimensions are shown to be greater than or equal to those for the actual assembly dimensions and are below the 0.95 regulatory limit.

For assembly classes that contain partial length rods (i.e., 9x9A, 10x10A, and 10x10B), calculations were performed for the actual (real) assembly configuration and for the axial segments (assumed to be full length) with and without the partial length rods. In all cases, the axial segment with only the full length rods present (where the partial length rods are absent) is bounding. Therefore, the bounding maximum k_{eff} values reported for assembly classes that contain partial length rods bound the reactivity regardless of the active fuel length of the partial

---

† ~~Taken directly from the HI-STAR applications (Docket Numbers 72-1008 and 71-9261).~~

length rods. As a result, the ~~Technical Specifications~~*Certificate of Compliance* ha~~ve~~*s* no minimum requirement for the active fuel length of the partial length rods.

For BWR fuel assembly classes where margins permit, the Zircaloy water rod tubes are artificially replaced by water in the bounding cases to remove the requirement for water rod thickness from the ~~Technical Specifications~~*Certificate of Compliance*. For these cases, the bounding water rod thickness is listed as zero.

As mentioned, the highest observed maximum k_{eff} value is 0.9457, corresponding to the artificial bounding assembly in the 10x10A assembly class. This assembly has the following bounding characteristics: (1) the partial length rods are assumed to be zero length (most reactive configuration); (2) the channel is assumed to be 120 mils thick; and (3) the active fuel length of the full length rods is 155 inches. Therefore, the maximum reactivity value is bounding compared to any of the real BWR assemblies listed.

6.2.4 ~~Damaged~~ BWR *and PWR Damaged* Fuel Assemblies and ~~BWR~~ Fuel Debris

In addition to storing intact PWR and BWR fuel assemblies, the HI-STORM 100 System is designed to store ~~damaged~~ BWR *and PWR damaged* fuel assemblies and ~~BWR~~ fuel debris. Damaged fuel assemblies and fuel debris are defined in Section 2.1.3 and ~~the Technical Specifications in Chapter 12~~ *Appendix B to the Certificate of Compliance*. Both damaged ~~BWR~~ fuel assemblies and ~~BWR~~ fuel debris are required to be loaded into Damaged Fuel Containers (DFCs) prior to being loaded into the MPC. *Four different DFC types with different cross sections are considered; three types for BWR fuel and one for PWR fuel.* DFCs containing fuel debris must be stored in the MPC-68F, *MPC-68FF or MPC-24EF*. DFCs containing *BWR* damaged fuel assemblies may be stored in ~~either~~ the MPC-68, ~~or~~ MPC-68F *or MPC-68FF. DFCs containing PWR damaged fuel may be stored in the MPC-24E and MPC-24EF.* The criticality evaluation of various possible damaged conditions of the fuel is presented in Subsection 6.4.4.

6.2.4.1 Damaged BWR Fuel Assemblies and BWR Fuel Debris in Assembly Classes 6x6A, 6x6B, 6x6C, 7x7A and 8x8A

Tables 6.2.*41*~~35~~ through 6.2.*45*~~39~~ show the maximum k_{eff} values for the *five*~~six~~ assembly classes *6x6A, 6x6B, 6x6C, 7x7A and 8x8A*~~that may be stored as damaged fuel or fuel debris~~. All maximum k_{eff} values include the bias, uncertainties, and calculational statistics, evaluated for the worst combination of manufacturing tolerances. All calculations were performed for a ^{10}B loading of 0.0067 g/cm^2, which is 75% of a minimum loading, 0.0089 g/cm^2. However, because the practical manufacturing lower limit for minimum ^{10}B loading is 0.01 g/cm^2, the minimum ^{10}B loading of 0.01 g/cm^2 is specified on BM-1479, Bill of Materials for 68-Assembly HI-STAR 100 BWR MPC, in Section 1.5, for the MPC-68F. As an additional level of conservatism in the analyses, the calculations were performed for an enrichment of 3.0 wt% ^{235}U, while the maximum allowable enrichment for these assembly classes is limited to 2.7 wt% ^{235}U in the ~~Technical Specifications~~*Certificate of Compliance*. Therefore, the maximum k_{eff} values for

damaged BWR fuel assemblies and fuel debris are conservative. Calculations for the various BWR fuel assemblies in the MPC-68F are summarized in Tables 6.2.*41*~~35~~ through 6.2.*45*~~39~~ for the fully flooded condition.

For the assemblies that may be stored as damaged fuel or fuel debris, the 6x6C01 assembly at 3.0 wt% ^{235}U enrichment has the highest reactivity (maximum k_{eff} of 0.8021). Considering all of the conservatism built into this analysis (e.g., higher than allowed enrichment and lower than actual ^{10}B loading), the actual reactivity will be lower.

Because the analysis for the damaged BWR fuel assemblies and fuel debris was performed for a ^{10}B loading of 0.0089 g/cm^2, which conservatively bounds the analysis of damaged BWR fuel assemblies in a*n* ~~standard~~ MPC-68 *or MPC-68FF* with a minimum ^{10}B loading of 0.0372 g/cm^2, damaged BWR fuel assemblies may also be stored in the ~~standard~~ MPC-68 *or MPC-68FF*. However, fuel debris is limited to the MPC-68F *and MPC-68FF* by ~~the Technical Specifications in Chapter 12~~ *Appendix B to the Certificate of Compliance.*

Tables 6.2.*41*~~35~~ through 6.2.*45*~~39~~ are formatted with the assembly class information in the top row, the unique assembly designations, dimensions, and k_{eff} values in the following rows above the bold double lines, and the bounding dimensions selected for the ~~Technical Specifications~~*Certificate of Compliance* and corresponding bounding k_{eff} values in the final rows. Where an assembly class contains only a single assembly (e.g., 6x6C, see Table 6.2.*43*~~37~~), the ~~Technical Specification~~ dimensions *listed in the Certificate of Compliance* are based on the assembly dimensions from that single assembly. All of the maximum k_{eff} values corresponding to the selected bounding dimensions are greater than or equal to those for the actual assembly dimensions and are well below the 0.95 regulatory limit.

6.2.4.2 Damaged BWR Fuel Assemblies and Fuel Debris in the MPC-68 and MPC-68FF

Damaged BWR fuel assemblies and fuel debris from all BWR classes may be loaded into the MPC-68 and MPC-68FF by restricting the locations of the DFCs to 16 specific cells on the periphery of the fuel basket. The MPC-68 may be loaded with up to 16 DFCs containing damaged fuel assemblies. The MPC-68FF may also be loaded with up to 16 DFCs, with up to 8 DFCs containing fuel debris.

For all assembly classes, the enrichment of the damaged fuel or fuel debris is limited to a maximum of 4.0 wt% ^{235}U, while the enrichment of the intact assemblies stored together with the damaged fuel is limited to a maximum of 3.7 wt% ^{235}U. The maximum k_{eff} is 0.9328. The criticality evaluation of the damaged fuel assemblies and fuel debris in the MPC-68 and MPC-68FF is presented in Section 6.4.4.2.

6.2.4.3 Damaged PWR Fuel Assemblies and Fuel Debris in the MPC-24E and MPC-24EF

In addition to storing intact PWR fuel assemblies, the HI-STORM 100 System is designed to store damaged PWR fuel assemblies (MPC-24E and MPC-24EF) and fuel debris (MPC-24EF only). Damaged fuel assemblies and fuel debris are defined in Section 2.1.3 and Appendix B of the Certificate of Compliance. Damaged PWR fuel assemblies and fuel debris are required to be loaded into PWR Damaged Fuel Containers (DFCs) prior to being loaded into the MPC. Up to four DFCs may be stored in the MPC-24E or MPC-24EF. When loaded with damaged fuel and/or fuel debris, the maximum enrichment for intact and damaged fuel is 4.0 wt% ^{235}U for all assembly classes listed in Table 6.2.6 through 6.2.22. The maximum k_{eff} for these classes is 0.9486. The criticality evaluation of the damaged fuel is presented in Subsection 6.4.4.2.

6.2.5 Thoria Rod Canister

Additionally, the HI-STORM 100 System is designed to store a Thoria Rod Canister in the MPC-68, MPC-68F or MPC-68FF. The canister is similar to a DFC and contains 18 intact Thoria Rods placed in a separator assembly. The reactivity of the canister in the MPC is very low compared to the approved fuel assemblies (The ^{235}U content of these rods correspond to UO_2 rods with an initial enrichment of approximately 1.7 wt% ^{235}U). It is therefore permissible to the Thoria Rod Canister together with any approved content in a MPC-68 or MPC-68F. Specifications of the canister and the Thoria Rods that are used in the criticality evaluation are given in Table 6.2.46. The criticality evaluation are presented in Subsection 6.4.6.

Table 6.2.1 (page 1 of 74)
BWR FUEL CHARACTERISTICS AND ASSEMBLY CLASS DEFINITIONS
(all dimensions are in inches)

Fuel Assembly Designation	Clad Material	Pitch	Number of Fuel Rods	Cladding OD	Cladding Thickness	Pellet Diameter	Active Fuel Length	Number of Water Rods	Water Rod OD	Water Rod ID	Channel Thickness	Channel ID
6x6A Assembly Class												
6x6A01	Zr	0.694	36	0.5645	0.0350	0.4940	110.0	0	n/a	n/a	0.060	4.290
6x6A02	Zr	0.694	36	0.5645	0.0360	0.4820	110.0	0	n/a	n/a	0.060	4.290
6x6A03	Zr	0.694	36	0.5645	0.0350	0.4820	110.0	0	n/a	n/a	0.060	4.290
6x6A04	Zr	0.694	36	0.5550	0.0350	0.4820	110.0	0	n/a	n/a	0.060	4.290
6x6A05	*Zr*	*0.696*	*36*	*0.5625*	*0.0350*	*0.4820*	*110.0*	*0*	*n/a*	*n/a*	*0.060*	*4.290*
6x6A06	*Zr*	*0.696*	*35*	*0.5625*	*0.0350*	*0.4820*	*110.0*	*1*	*0.0*	*0.0*	*0.060*	*4.290*
6x6A07	*Zr*	*0.700*	*36*	*0.5555*	*0.03525*	*0.4780*	*110.0*	*0*	*n/a*	*n/a*	*0.060*	*4.290*
6x6A08	*Zr*	*0.710*	*36*	*0.5625*	*0.0260*	*0.4980*	*110.0*	*0*	*n/a*	*n/a*	*0.060*	*4.290*
6x6B (MOX) Assembly Class												
6x6B01	Zr	0.694	36	0.5645	0.0350	0.4820	110.0	0	n/a	n/a	0.060	4.290
6x6B02	Zr	0.694	36	0.5625	0.0350	0.4820	110.0	0	n/a	n/a	0.060	4.290
6x6B03	*Zr*	*0.696*	*36*	*0.5625*	*0.0350*	*0.4820*	*110.0*	*0*	*n/a*	*n/a*	*0.060*	*4.290*
6x6B04	*Zr*	*0.696*	*35*	*0.5625*	*0.0350*	*0.4820*	*110.0*	*1*	*0.0*	*0.0*	*0.060*	*4.290*
6x6B05	*Zr*	*0.710*	*35*	*0.5625*	*0.0350*	*0.4820*	*110.0*	*1*	*0.0*	*0.0*	*0.060*	*4.290*
6x6C Assembly Class												
6x6C01	Zr	0.740	36	0.5630	0.0320	0.4880	77.5	0	n/a	n/a	0.060	4.542
7x7A Assembly Class												
7x7A01	Zr	0.631	49	0.4860	0.032~~830~~	0.4110	~~79~~80	0	n/a	n/a	0.060	4.542

Table 6.2.1 (page 2 of 7)
BWR FUEL CHARACTERISTICS AND ASSEMBLY CLASS DEFINITIONS
(all dimensions are in inches)

Fuel Assembly Designation	Clad Material	Pitch	Number of Fuel Rods	Cladding OD	Cladding Thickness	Pellet Diameter	Active Fuel Length	Number of Water Rods	Water Rod OD	Water Rod ID	Channel Thickness	Channel ID
7x7B Assembly Class												
7x7B01	Zr	0.738	49	0.5630	0.0320	0.4870	150	0	n/a	n/a	0.080	5.278
7x7B02	Zr	0.738	49	0.5630	0.0370	0.4770	150	0	n/a	n/a	0.102	5.291
7x7B03	Zr	0.738	49	0.5630	0.0370	0.4770	150	0	n/a	n/a	0.080	5.278
7x7B04	Zr	0.738	49	0.5700	0.0355	0.4880	150	0	n/a	n/a	0.080	5.278
7x7B05	Zr	0.738	49	0.5630	0.0340	0.4775	150	0	n/a	n/a	0.080	5.278
7x7B06	*Zr*	*0.738*	*49*	*0.5700*	*0.0355*	*0.4910*	*150*	*0*	*n/a*	*n/a*	*0.080*	*5.278*
8x8A Assembly Class												
8x8A01	Zr	0.523	64	0.4120	0.0250	0.3580	110	0	n/a	n/a	0.100	4.290
8x8A02	*Zr*	*0.523*	*63*	*0.4120*	*0.0250*	*0.3580*	*120*	*0*	*n/a*	*n/a*	*0.100*	*4.290*

Table 6.2.1 (page ~~2~~3 of 74)
BWR FUEL CHARACTERISTICS AND ASSEMBLY CLASS DEFINITIONS
(all dimensions are in inches)

Fuel Assembly Designation	Clad Material	Pitch	Number of Fuel Rods	Cladding OD	Cladding Thickness	Pellet Diameter	Active Fuel Length	Number of Water Rods	Water Rod OD	Water Rod ID	Channel Thickness	Channel ID
8x8B Assembly Class												
8x8B01	Zr	0.641	63	0.4840	0.0350	0.4050	150	1	0.484	0.414	0.100	5.278
8x8B02	Zr	0.636	63	0.4840	0.0350	0.4050	150	1	0.484	0.414	0.100	5.278
8x8B03	Zr	0.640	63	0.4930	0.0340	0.4160	150	1	0.493	0.425	0.100	5.278
8x8B04	*Zr*	*0.642*	*64*	*0.5015*	*0.0360*	*0.4195*	*150*	*0*	*n/a*	*n/a*	*0.100*	*5.278*
8x8C Assembly Class												
8x8C01	Zr	0.641	62	0.4840	0.0350	0.4050	150	2	0.484	0.414	0.100	5.278
8x8C02	Zr	0.640	62	0.4830	0.0320	0.4100	150	2	0.591	0.531	0.000	no channel
8x8C03	Zr	0.640	62	0.4830	0.0320	0.4100	150	2	0.591	0.531	0.080	5.278
8x8C04	Zr	0.640	62	0.4830	0.0320	0.4100	150	2	0.591	0.531	0.100	5.278
8x8C05	Zr	0.640	62	0.4830	0.0320	0.4100	150	2	0.591	0.531	0.120	5.278
8x8C06	Zr	0.640	62	0.4830	0.0320	0.4110	150	2	0.591	0.531	0.100	5.278
8x8C07	Zr	0.640	62	0.4830	0.0340	0.4100	150	2	0.591	0.531	0.100	5.278
8x8C08	Zr	0.640	62	0.4830	0.0320	0.4100	150	2	0.493	0.425	0.100	5.278
8x8C09	Zr	0.640	62	0.4930	0.0340	0.4160	150	2	0.493	0.425	0.100	5.278
8x8C10	Zr	0.640	62	0.4830	0.0340	0.4100	150	2	0.591	0.531	0.120	5.278
8x8C11	Zr	0.640	62	0.4830	0.0340	0.4100	150	2	0.591	0.531	0.120	5.215
8x8C12	Zr	0.636	62	0.4830	0.0320	0.4110	150	2	0.591	0.531	0.120	5.215

Table 6.2.1 (page ~~34~~ of 74)
BWR FUEL CHARACTERISTICS AND ASSEMBLY CLASS DEFINITIONS
(all dimensions are in inches)

Fuel Assembly Designation	Clad Material	Pitch	Number of Fuel Rods	Cladding OD	Cladding Thickness	Pellet Diameter	Active Fuel Length	Number of Water Rods	Water Rod OD	Water Rod ID	Channel Thickness	Channel ID
8x8D Assembly Class												
8x8D01	Zr	0.640	60	0.4830	0.0320	0.4110	150	2 large/ 2 small	0.591/ 0.483	0.531/ 0.433	0.100	5.278
8x8D02	Zr	0.640	60	0.4830	0.0320	0.4110	150	4	0.591	0.531	0.100	5.278
8x8D03	Zr	0.640	60	0.4830	0.0320	0.4110	150	4	0.483	0.433	0.100	5.278
8x8D04	Zr	0.640	60	0.4830	0.0320	0.4110	150	1	1.34	1.26	0.100	5.278
8x8D05	Zr	0.640	60	0.4830	0.0320	0.4100	150	1	1.34	1.26	0.100	5.278
8x8D06	Zr	0.640	60	0.4830	0.0320	0.4110	150	1	1.34	1.26	0.120	5.278
8x8D07	Zr	0.640	60	0.4830	0.0320	0.4110	150	1	1.34	1.26	0.080	5.278
8x8D08	*Zr*	*0.640*	*61*	*0.4830*	*0.0300*	*0.4140*	*150*	*3*	*0.591*	*0.531*	*0.080*	*5.278*
8x8E Assembly Class												
8x8E01	Zr	0.640	59	0.4930	0.0340	0.4160	150	5	0.493	0.425	0.100	5.278
8x8F Assembly Class												
8x8F01	*Zr*	*0.609*	*64*	*0.4576*	*0.0290*	*0.3913*	*150*	*4*†	*0.291*†	*0.228*†	*0.055*	*5.390*
9x9A Assembly Class												
9x9A01	Zr	0.566	74	0.4400	0.0280	0.3760	150	2	0.98	0.92	0.100	5.278
9x9A02	Zr	0.566	66	0.4400	0.0280	0.3760	150	2	0.98	0.92	0.100	5.278
9x9A03	Zr	0.566	74/66	0.4400	0.0280	0.3760	150/90	2	0.98	0.92	0.100	5.278
9x9A04	Zr	0.566	~~74~~/66	0.4400	0.0280	0.3760	150/~~90~~	2	0.98	0.92	0.120	5.278

† *Four rectangular water cross segments dividing the assembly into four quadrants*

Table 6.2.1 (page 45 of 74)
BWR FUEL CHARACTERISTICS AND ASSEMBLY CLASS DEFINITIONS
(all dimensions are in inches)

Fuel Assembly Designation	Clad Material	Pitch	Number of Fuel Rods	Cladding OD	Cladding Thickness	Pellet Diameter	Active Fuel Length	Number of Water Rods	Water Rod OD	Water Rod ID	Channel Thickness	Channel ID
9x9B Assembly Class												
9x9B01	Zr	0.569	72	0.4330	0.0262	0.3737	150	1	1.516	1.459	0.100	5.278
9x9B02	Zr	0.569	72	0.4330	0.0260	0.3737	150	1	1.516	1.459	0.100	5.278
9x9B03	*Zr*	*0.572*	*72*	*0.4330*	*0.0260*	*0.3737*	*150*	*1*	*1.516*	*1.459*	*0.100*	*5.278*
9x9C Assembly Class												
9x9C01	Zr	0.572	80	0.4230	0.0295	0.3565	150	1	0.512	0.472	0.100	5.278
9x9D Assembly Class												
9x9D01	Zr	0.572	79	0.4240	0.0300	0.3565	150	2	0.42~~5~~*4*	0.364	0.100	5.278
9x9E Assembly Class†												
9x9E01	Zr	0.572	76	0.4170	0.02~~9~~*065*	0.35~~25~~*30*	150	5	0.4~~25~~*546*	0.3~~64~~*522*	0.~~100~~*120*	5.2~~78~~*15*
9x9E02	*Zr*	*0.572*	*48* *28*	*0.4170* *0.4430*	*0.0265* *0.0285*	*0.3530* *0.3745*	*150*	*5*	*0.546*	*0.522*	*0.120*	*5.215*

† *The 9x9E and 9x9F fuel assembly classes represent a single fuel type containing fuel rods with different dimensions (SPC 9x9-5). In addition to the actual configuration (9x9E02 and 9x9F02), the 9x9E class contains a hypothetical assembly with only small fuel rods (9x9E01), and the 9x9F class contains a hypothetical assembly with only large rods (9x9F01). This was done in order to simplify the specification of this assembly in the CoC.*

Table 6.2.1 (page 6 of ~~6~~7)
BWR FUEL CHARACTERISTICS AND ASSEMBLY CLASS DEFINITIONS
(all dimensions are in inches)

Fuel Assembly Designation	Clad Material	Pitch	Number of Fuel Rods	Cladding OD	Cladding Thickness	Pellet Diameter	Active Fuel Length	Number of Water Rods	Water Rod OD	Water Rod ID	Channel Thickness	Channel ID
9x9F Assembly Class*												
9x9F01	Zr	0.572	76	0.4430	0.0~~310~~*285*	0.3745	150	5	0.4~~25~~*546*	0.~~364~~*522*	0.~~100~~*120*	5.2~~78~~*15*
9x9F02	*Zr*	*0.572*	*48* *28*	*0.4170* *0.4430*	*0.0265* *0.0285*	*0.3530* *0.3745*	*150*	*5*	*0.546*	*0.522*	*0.120*	*5.215*
9x9G Assembly Class												
9x9G01	*Zr*	*0.572*	*72*	*0.4240*	*0.0300*	*0.3565*	*150*	*1*	*1.668*	*1.604*	*0.120*	*5.278*
10x10A Assembly Class												
10x10A01	Zr	0.510	92	0.4040	0.0260	0.3450	155	2	0.980	0.920	0.100	5.278
10x10A02	Zr	0.510	78	0.4040	0.0260	0.3450	155	2	0.980	0.920	0.100	5.278
10x10A03	Zr	0.510	92/78	0.4040	0.0260	0.3450	155/90	2	0.980	0.920	0.100	5.278
10x10B Assembly Class												
10x10B01	Zr	0.510	91	0.3957	0.0239	0.3413	155	1	1.378	1.321	0.100	5.278
10x10B02	Zr	0.510	83	0.3957	0.0239	0.3413	155	1	1.378	1.321	0.100	5.278
10x10B03	Zr	0.510	91/83	0.3957	0.0239	0.3413	155/90	1	1.378	1.321	0.100	5.278

* *The 9x9E and 9x9F fuel assembly classes represent a single fuel type containing fuel rods with different dimensions (SPC 9x9-5). In addition to the actual configuration (9x9E02 and 9x9F02), the 9x9E class contains a hypothetical assembly with only small fuel rods (9x9E01), and the 9x9F class contains a hypothetical assembly with only large rods (9x9F01). This was done in order to simplify the specification of this assembly in the CoC.*

Table 6.2.1 (page 7 of 7)
BWR FUEL CHARACTERISTICS AND ASSEMBLY CLASS DEFINITIONS
(all dimensions are in inches)

Fuel Assembly Designation	Clad Material	Pitch	Number of Fuel Rods	Cladding OD	Cladding Thickness	Pellet Diameter	Active Fuel Length	Number of Water Rods	Water Rod OD	Water Rod ID	Channel Thickness	Channel ID
10x10C Assembly Class												
10x10C01	Zr	0.488	96	0.37~~90~~*80*	0.024~~8~~*3*	0.3224	150	5	~~0.4930~~ *1.227*	~~0.4250~~ *1.165*	0.055	~~5.457~~*5.347*
10x10D Assembly Class												
10x10D01	SS	0.565	100	0.3960	0.0200	0.3500	83	0	n/a	n/a	0.08	5.663
10x10E Assembly Class												
10x10E01	SS	0.557	96	0.3940	0.0220	0.3430	83	4	0.3940	0.3500	0.08	5.663

Table 6.2.2 (page 1 of 43)
PWR FUEL CHARACTERISTICS AND ASSEMBLY CLASS DEFINITIONS
(all dimensions are in inches)

Fuel Assembly Designation	Clad Material	Pitch	Number of Fuel Rods	Cladding OD	Cladding Thickness	Pellet Diameter	Active Fuel Length	Number of Guide Tubes	Guide Tube OD	Guide Tube ID	Guide Tube Thickness
14x14A Assembly Class											
14x14A01	Zr	0.556	179	0.400	0.0243	0.3444	150	17	0.527	0.493	0.0170
14x14A02	Zr	0.556	179	0.400	0.0243	0.3444	150	17	0.528	0.490	0.0190
14x14A03	Zr	0.556	179	0.400	0.0243	0.3444	150	17	0.526	0.492	0.0170
14x14B Assembly Class											
14x14B01	Zr	0.556	179	0.422	0.0243	0.3659	150	17	0.539	0.505	0.0170
14x14B02	Zr	0.556	179	0.417	0.0295	0.3505	150	17	0.541	0.507	0.0170
14x14B03	Zr	0.556	179	0.424	0.0300	0.3565	150	17	0.541	0.507	0.0170
14x14B04	Zr	0.556	179	0.426	0.0310	0.3565	150	17	0.541	0.507	0.0170
14x14C Assembly Class											
14x14C01	Zr	0.580	176	0.440	0.0280	0.3765	150	5	1.115	1.035	0.0400
14x14C02	Zr	0.580	176	0.440	0.0280	0.3770	150	5	1.115	1.035	0.0400
14x14C03	*Zr*	*0.580*	*176*	*0.440*	*0.0260*	*0.3805*	*150*	*5*	*1.111*	*1.035*	*0.0380*
14x14D Assembly Class											
14x14D01	SS	0.556	180	0.422	0.0165	0.3835	144	16	0.543	0.514	0.0145

Table 6.2.2 (page 2 of 4)
PWR FUEL CHARACTERISTICS AND ASSEMBLY CLASS DEFINITIONS
(all dimensions are in inches)

Fuel Assembly Designation	*Clad Material*	*Pitch*	*Number of Fuel Rods*	*Cladding OD*	*Cladding Thickness*	*Pellet Diameter*	*Active Fuel Length*	*Number of Guide Tubes*	*Guide Tube OD*	*Guide Tube ID*	*Guide Tube Thickness*
14x14E Assembly Class											
14x14E01†	*SS*	*0.453 and 0.411*	*162 3 8*	*0.3415 0.3415 0.3415*	*0.0120 0.0285 0.0200*	*0.313 0.280 0.297*	*102*	*0*	*n/a*	*n/a*	*n/a*
14x14E02†	*SS*	*0.453 and 0.411*	*173*	*0.3415*	*0.0120*	*0.313*	*102*	*0*	*n/a*	*n/a*	*n/a*
14x14E03†	*SS*	*0.453 and 0.411*	*173*	*0.3415*	*0.0285*	*0.0280*	*102*	*0*	*n/a*	*n/a*	*n/a*
15x15A Assembly Class											
15x15A01	Zr	0.550	204	0.418	0.0260	0.3580	150	21	0.533	0.500	0.0165

† *This is the fuel assembly used at Indian Point 1 (IP-1). This assembly is a 14x14 assembly with 23 fuel rods omitted to allow passage of control rods between assemblies. It has a different pitch in different sections of the assembly, and different fuel rod dimensions in some rods.*

Table 6.2.2 (page 32 of 43)
PWR FUEL CHARACTERISTICS AND ASSEMBLY CLASS DEFINITIONS
(all dimensions are in inches)

Fuel Assembly Designation	Clad Material	Pitch	Number of Fuel Rods	Cladding OD	Cladding Thickness	Pellet Diameter	Active Fuel Length	Number of Guide Tubes	Guide Tube OD	Guide Tube ID	Guide Tube Thickness
15x15B Assembly Class											
15x15B01	Zr	0.563	204	0.422	0.0245	0.3660	150	21	0.533	0.499	0.0170
15x15B02	Zr	0.563	204	0.422	0.0245	0.3660	150	21	0.546	0.512	0.0170
15x15B03	Zr	0.563	204	0.422	0.0243	0.3660	150	21	0.533	0.499	0.0170
15x15B04	Zr	0.563	204	0.422	0.0243	0.3659	150	21	0.545	0.515	0.0150
15x15B05	Zr	0.563	204	0.422	0.0242	0.3659	150	21	0.545	0.515	0.0150
15x15B06	Zr	0.563	204	0.420	0.0240	0.3671	150	21	0.544	0.514	0.0150
15x15C Assembly Class											
15x15C01	Zr	0.563	204	0.424	0.0300	0.3570	150	21	0.544	0.493	0.0255
15x15C02	Zr	0.563	204	0.424	0.0300	0.3570	150	21	0.544	0.511	0.0165
15x15C03	Zr	0.563	204	0.424	0.0300	0.3565	150	21	0.544	0.511	0.0165
15x15C04	Zr	0.563	204	0.417	0.0300	0.3565	150	21	0.544	0.511	0.0165
15x15D Assembly Class											
15x15D01	Zr	0.568	208	0.430	0.0265	0.3690	150	17	0.530	0.498	0.0160
15x15D02	Zr	0.568	208	0.430	0.0265	0.3686	150	17	0.530	0.498	0.0160
15x15D03	Zr	0.568	208	0.430	0.0265	0.3700	150	17	0.530	0.499	0.0155
15x15D04	Zr	0.568	208	0.430	0.0250	0.3735	150	17	0.530	0.500	0.0150
15x15E Assembly Class											
15x15E01	Zr	0.568	208	0.428	0.0245	0.3707	150	17	0.528	0.500	0.0140
15x15F Assembly Class											
15x15F01	Zr	0.568	208	0.428	0.0230	0.3742	150	17	0.528	0.500	0.0140

Table 6.2.2 (page 43 of 43)
PWR FUEL CHARACTERISTICS AND ASSEMBLY CLASS DEFINITIONS
(all dimensions are in inches)

Fuel Assembly Designation	Clad Material	Pitch	Number of Fuel Rods	Cladding OD	Cladding Thickness	Pellet Diameter	Active Fuel Length	Number of Guide Tubes	Guide Tube OD	Guide Tube ID	Guide Tube Thickness
15x15G Assembly Class											
15x15G01	SS	0.563	204	0.422	0.0165	0.3825	144	21	0.543	0.514	0.0145
15x15H Assembly Class											
15x15H01	*Zr*	*0.568*	*208*	*0.414*	*0.0220*	*0.3622*	*150*	*17*	*0.528*	*0.500*	*0.0140*
16x16A Assembly Class											
16x16A01	Zr	0.506	236	0.382	0.0250	0.3255	150	5	0.980	0.900	0.0400
16x16A02	Zr	0.506	236	0.382	0.0250	0.3250	150	5	0.980	0.900	0.0400
17x17A Assembly Class											
17x17A01	Zr	0.496	264	0.360	0.0225	0.3088	144	25	0.474	0.442	0.0160
17x17A02	Zr	0.496	264	0.360	0.0225	0.3088	150	25	0.474	0.442	0.0160
17x17A03	Zr	0.496	264	0.360	0.0250	0.3030	150	25	0.480	0.448	0.0160
17x17B Assembly Class											
17x17B01	Zr	0.496	264	0.374	0.0225	0.3225	150	25	0.482	0.450	0.0160
17x17B02	Zr	0.496	264	0.374	0.0225	0.3225	150	25	0.474	0.442	0.0160
17x17B03	Zr	0.496	264	0.376	0.0240	0.3215	150	25	0.480	0.448	0.0160
17x17B04	Zr	0.496	264	0.372	0.0205	0.3232	150	25	0.427	0.399	0.0140
17x17B05	Zr	0.496	264	0.374	0.0240	0.3195	150	25	0.482	0.450	0.0160
17x17B06	Zr	0.496	264	0.372	0.0205	0.3232	150	25	0.480	0.452	0.0140
17x17C Assembly Class											
17x17C01	Zr	0.502	264	0.379	0.0240	0.3232	150	25	0.472	0.432	0.0200
17x17C02	Zr	0.502	264	0.377	0.0220	0.3252	150	25	0.472	0.432	0.0200

Table 6.2.3
REACTIVITY EFFECT OF ASSEMBLY PARAMETER VARIATIONS *for BWR Fuel in the MPC-68*
(all dimensions are in inches)

Fuel Assembly/ Parameter Variation	reactivity effect	calculated k_{eff}	standard deviation	cladding OD	cladding ID	cladding thickness	pellet OD	water rod thickness	channel thickness
8x8C04 (GE8x8R)	reference	0.9307	0.0007	0.483	0.419	0.032	0.410	0.030	0.100
increase pellet OD (+0.001)	+0.0005	0.9312	0.0007	0.483	0.419	0.032	0.411	0.030	0.100
decrease pellet OD (-0.001)	-0.0008	0.9299	0.0009	0.483	0.419	0.032	0.409	0.030	0.100
increase clad ID (+0.004)	+0.0027	0.9334	0.0007	0.483	0.423	0.030	0.410	0.030	0.100
decrease clad ID (-0.004)	-0.0034	0.9273	0.0007	0.483	0.415	0.034	0.410	0.030	0.100
increase clad OD (+0.004)	-0.0041	0.9266	0.0008	0.487	0.419	0.034	0.410	0.030	0.100
decrease clad OD (-0.004)	+0.0023	0.9330	0.0007	0.479	0.419	0.030	0.410	0.030	0.100
increase water rod thickness (+0.015)	-0.0019	0.9288	0.0008	0.483	0.419	0.032	0.410	0.045	0.100
decrease water rod thickness (-0.015)	+0.0001	0.9308	0.0008	0.483	0.419	0.032	0.410	0.015	0.100
remove water rods (i.e., replace the water rod tubes with water)	+0.0021	0.9328	0.0008	0.483	0.419	0.032	0.410	0.000	0.100
remove channel	-0.0039	0.9268	0.0009	0.483	0.419	0.032	0.410	0.030	0.000
increase channel thickness (+0.020)	+0.0005	0.9312	0.0007	0.483	0.419	0.032	0.410	0.030	0.120

Table 6.2.4
REACTIVITY EFFECT OF ASSEMBLY PARAMETER VARIATIONS in PWR Fuel in the MPC 24 with 400ppm soluble boron concentration (all dimensions are in inches)

Fuel Assembly/ Parameter Variation	reactivity effect	calculated k_{eff}	standard deviation	cladding OD	Cladding ID	cladding thickness	pellet OD	guide tube thickness
15x15F (15x15 B&W, 4.94% E)	reference	0.9340	0.0005	0.4280	0.3820	0.0230	0.3742	0.0140
increase pellet OD (+0.001)	+0.0002	0.9342	0.0005	0.4280	0.3820	0.0230	0.3752	0.0140
decrease pellet OD (-0.001)	-0.0003	0.9337	0.0004	0.4280	0.3820	0.0230	0.3732	0.0140
increase clad ID (+0.004)	+0.0035	0.9374	0.0004	0.4280	0.3860	0.0210	0.3742	0.0140
decrease clad ID (-0.004)	-0.0026	0.9313	0.0005	0.4280	0.3780	0.0250	0.3742	0.0140
increase clad OD (+0.004)	-0.0032	0.9308	0.0004	0.4320	0.3820	0.0250	0.3742	0.0140
decrease clad OD (-0.004)	+0.0032	0.9372	0.0005	0.4240	0.3820	0.0210	0.3742	0.0140
increase guide tube thickness (+0.004)	-0.0010	0.9329	0.0005	0.4280	0.3820	0.0230	0.3742	0.0180
decrease guide tube thickness (-0.004)	+0.0014	0.9354	0.0004	0.4280	0.3820	0.0230	0.3742	0.0100
remove guide tubes (i.e., replace the guide tubes with water)	+0.0040	0.9379	0.0005	0.4280	0.3820	0.0230	0.3742	0.000
voided guide tubes	-0.0312	0.9028	0.0004	0.4280	0.3820	0.0230	0.3742	0.0140

Table 6.2.5

REACTIVITY EFFECT OF ASSEMBLY PARAMETER VARIATIONS in PWR Fuel in the MPC-32 with 2600ppm soluble boron concentration (all dimensions are in inches)

Fuel Assembly/ Parameter Variation	reactivity effect	calculated k_{eff}	standard deviation	cladding OD	cladding ID	cladding thickness	pellet OD	guide tube thickness
15x15F (15x15 B&W, 5.0% E)	reference	0.9389	0.0004	0.4280	0.3820	0.0230	0.3742	0.0140
increase pellet OD (+0.001)	+0.0019	0.9408	0.0004	0.4280	0.3820	0.0230	0.3752	0.0140
decrease pellet OD (-0.001)	0.0000	0.9389	0.0004	0.4280	0.3820	0.0230	0.3732	0.0140
increase clad ID (+0.004)	+0.0015	0.9404	0.0004	0.4280	0.3860	0.0210	0.3742	0.0140
decrease clad ID (-0.004)	-0.0015	0.9374	0.0004	0.4280	0.3780	0.0250	0.3742	0.0140
increase clad OD (+0.004)	-0.0002	0.9387	0.0004	0.4320	0.3820	0.0250	0.3742	0.0140
decrease clad OD (-0.004)	+0.0007	0.9397	0.0004	0.4240	0.3820	0.0210	0.3742	0.0140
increase guide tube thickness (+0.004)	-0.0003	0.9387	0.0004	0.4280	0.3820	0.0230	0.3742	0.0180
decrease guide tube thickness (-0.004)	-0.0005	0.9384	0.0004	0.4280	0.3820	0.0230	0.3742	0.0100
remove guide tubes (i.e., replace the guide tubes with water)	-0.0005	0.9385	0.0004	0.4280	0.3820	0.0230	0.3742	0.000
voided guide tubes	+0.0039	0.9428	0.0004	0.4280	0.3820	0.0230	0.3742	0.0140

Table 6.2. 64
MAXIMUM K_{EFF} VALUES FOR THE 14X14A ASSEMBLY CLASS IN THE MPC-24
(all dimensions are in inches)

14x14A (4.6% Enrichment, Boral ^{10}B minimum loading of 0.02 g/cm^2) 179 fuel rods, 17 guide tubes, pitch=0.556, Zr clad									
Fuel Assembly Designation	maximum k_{eff}	calculated k_{eff}	standard deviation	cladding OD	cladding ID	cladding thickness	pellet OD	fuel length	guide tube thickness
14x14A01	0.9378	0.9332	0.0010	0.400	0.3514	0.0243	0.3444	150	0.017
14x14A02	0.9374	0.9328	0.0009	0.400	0.3514	0.0243	0.3444	150	0.019
14x14A03	0.9383	0.9340	0.0008	0.400	0.3514	0.0243	0.3444	150	0.017
Dimensions Listed in Certificate of Compliance				0.400 (min.)	0.3514 (max.)		0.3444 (max.)	150 (max.)	0.017 (min.)
bounding dimensions (14x14A03)	0.9383	0.9340	0.0008	0.400	0.3514	0.0243	0.3444	150	0.017

Table 6.2.75
MAXIMUM K_{EFF} VALUES FOR THE 14X14B ASSEMBLY CLASS IN THE MPC-24
(all dimensions are in inches)

14x14B (4.6% Enrichment, Boral ^{10}B minimum loading of 0.02 g/cm^2) 179 fuel rods, 17 guide tubes, pitch=0.556, Zr clad									
Fuel Assembly Designation	maximum k_{eff}	calculated k_{eff}	standard deviation	cladding OD	cladding ID	cladding thickness	pellet OD	fuel length	guide tube thickness
14x14B01	0.9268	0.9225	0.0008	0.422	0.3734	0.0243	0.3659	150	0.017
14x14B02	0.9243	0.9200	0.0008	0.417	0.3580	0.0295	0.3505	150	0.017
14x14B03	0.9196	0.9152	0.0009	0.424	0.3640	0.0300	0.3565	150	0.017
14x14B04	0.9163	0.9118	0.0009	0.426	0.3640	0.0310	0.3565	150	0.017
Dimensions Listed in Certificate of Compliance				0.417 (min.)	0.3734 (max.)		0.3659 (max.)	150 (max.)	0.017 (min.)
bounding dimensions (B14x14B01)	0.9323	0.9280	0.0008	0.417	0.3734	0.0218	0.3659	150	0.017

Table 6.2.8~~6~~
MAXIMUM K_{EFF} VALUES FOR THE 14X14C ASSEMBLY CLASS IN THE MPC-24
(all dimensions are in inches)

14x14C (4.6% Enrichment, Boral ^{10}B minimum loading of 0.02 g/cm^2) 176 fuel rods, 5 guide tubes, pitch=0.580, Zr clad									
Fuel Assembly Designation	maximum k_{eff}	calculated k_{eff}	standard deviation	cladding OD	Cladding ID	cladding thickness	pellet OD	fuel length	guide tube thickness
14x14C01	0.9361	0.9317	0.0009	0.440	0.3840	0.0280	0.3765	150	0.040
14x14C02	0.9355	0.9312	0.0008	0.440	0.3840	0.0280	0.3770	150	0.040
14x14C03	*0.9400*	*0.9357*	*0.0008*	*0.440*	*0.3880*	*0.0260*	*0.3805*	*150*	*0.038*
Dimensions Listed in Certificate of Compliance				0.440 (min.)	0.384~~0~~*80* (max.)		0.37~~70~~*805*‡ (max.)	150 (max.)	0.04~~0~~*38* (min.)
bounding dimensions (14x14C0~~1~~*3*)	0.93~~61~~*400*	0.93~~17~~*757*	0.0009*8*	0.440	0.384~~0~~*80*	0.02~~8~~*060*	0.37~~65~~*805*	150	0.04~~0~~*38*

‡ ~~Because the k_{eff} values are statistically equivalent (within 1σ) for the small variation in pellet diameter, the pellet diameter listed in the Certificate of Compliance is the larger of the two values.~~

Table 6.2.97
MAXIMUM K_{EFF} VALUES FOR THE 14X14D ASSEMBLY CLASS IN THE MPC-24
(all dimensions are in inches)

14x14D (4.0% Enrichment, Boral ^{10}B minimum loading of 0.02 g/cm^2) 180 fuel rods, 16 guide tubes, pitch=0.556, SS clad									
Fuel Assembly Designation	maximum k_{eff}	calculated k_{eff}	standard deviation	cladding OD	Cladding ID	cladding thickness	pellet OD	fuel length	guide tube thickness
14x14D01	0.8576	0.8536	0.0007	0.422	0.3890	0.0165	0.3835	144	0.0145
Dimensions Listed in Certificate of Compliance				0.422 (min.)	0.3890 (max.)		0.3835 (max.)	144 (max.)	0.0145 (min.)

Table 6.2.10
MAXIMUM K_{EFF} VALUES FOR THE 14X14E ASSEMBLY CLASS IN THE MPC-24
(all dimensions are in inches)

14x14E (5.0% Enrichment, Boral ^{10}B minimum loading of 0.02 g/cm^2) *173 fuel rods, 0 guide tubes, pitch=0.453 and 0.441, SS clad†*									
Fuel Assembly Designation	*maximum k_{eff}*	*calculated k_{eff}*	*standard deviation*	*cladding OD*	*cladding ID*	*cladding thickness*	*pellet OD*	*fuel length††*	*guide tube thickness*
14x14E01	*0.7663*	*0.7618*	*0.0009*	*0.3415*	*0.3175* *0.2845* *0.3015*	*0.0120* *0.0285* *0.0200*	*0.3130* *0.2800* *0.2970*	*102*	*0.0000*
14x14E02	*0.7715*	*0.7671*	*0.0008*	*0.3415*	*0.3175*	*0.0120*	*0.3130*	*102*	*0.0000*
14x14E03	*0.7016*	*0.6977*	*0.0006*	*0.3415*	*0.2845*	*0.0285*	*0.2800*	*102*	*0.0000*
Dimensions Listed in Certificate of Compliance				*0.3415 (min.)*	*0.3175 (max.)*		*0.3130 (max.)*	*102 (max.)*	*0.0000 (min.)*
Bounding dimensions (14x14E02)	*0.7715*	*0.7671*	*0.0008*	*0.3415*	*0.3175*	*0.0120*	*0.3130*	*102*	*0.0000*

† This is the IP-1 fuel assembly at Indian Point. This assembly is a 14x14 assembly with 23 fuel rods omitted to allow passage of control rods between assemblies. See Figure 6.2.1 for details of the pitch and location of the fuel rods. Fuel rod dimensions are bounding for each of the three types of rods found in the IP-1 fuel assembly.
†† Calculations were conservatively performed for a fuel length of 150 inches.

Table 6.2.*11*~~8~~
MAXIMUM K_{EFF} VALUES FOR THE 15X15A ASSEMBLY CLASS IN THE MPC-24
(all dimensions are in inches)

15x15A (4.1% Enrichment, Boral ^{10}B minimum loading of 0.02 g/cm^2) 204 fuel rods, 21 guide tubes, pitch=0.550, Zr clad									
Fuel Assembly Designation	maximum k_{eff}	calculated k_{eff}	standard deviation	cladding OD	cladding ID	cladding thickness	pellet OD	fuel length	guide tube thickness
15x15A01	0.9301	0.9259	0.0008	0.418	0.3660	0.0260	0.3580	150	0.0165
Dimensions Listed in Certificate of Compliance				0.418 (min.)	0.3660 (max.)		0.3580 (max.)	150 (max.)	0.0165 (min.)

Table 6.2.129
MAXIMUM K_{EFF} VALUES FOR THE 15X15B ASSEMBLY CLASS IN THE MPC-24
(all dimensions are in inches)

15x15B (4.1% Enrichment, Boral ^{10}B minimum loading of 0.02 g/cm^2) 204 fuel rods, 21 guide tubes, pitch=0.563, Zr clad									
Fuel Assembly Designation	maximum k_{eff}	calculated k_{eff}	standard deviation	cladding OD	cladding ID	cladding thickness	pellet OD	fuel length	guide tube thickness
15x15B01	0.9427	0.9384	0.0008	0.422	0.3730	0.0245	0.3660	150	0.017
15x15B02	0.9441	0.9396	0.0009	0.422	0.3730	0.0245	0.3660	150	0.017
15x15B03	0.9462	0.9420	0.0008	0.422	0.3734	0.0243	0.3660	150	0.017
15x15B04	0.9452	0.9407	0.0009	0.422	0.3734	0.0243	0.3659	150	0.015
15x15B05	0.9473	0.9431	0.0008	0.422	0.3736	0.0242	0.3659	150	0.015
15x15B06	0.9448	0.9404	0.0008	0.420	0.3720	0.0240	0.3671	150	0.015
Dimensions Listed in Certificate of Compliance				0.420 (min.)	0.3736 (max.)		0.3671 (max.)	150 (max.)	0.015 (min.)
bounding dimensions (B15x15B01)	0.9471†	0.9428	0.0008	0.420	0.3736	0.0232	0.3671	150	0.015

† The k_{eff} value listed for the 15x15B05 case is slightly higher than that for the case with the bounding dimensions. However, the difference (0.0002) is well within the statistical uncertainties, and thus, the two values are statistically equivalent (within 1σ). Therefore, the 0.9473 value is listed in Table 6.1.1 as the maximum.

Table 6.2.*13*~~10~~
MAXIMUM K_{EFF} VALUES FOR THE 15X15C ASSEMBLY CLASS IN THE MPC-24
(all dimensions are in inches)

15x15C (4.1% Enrichment, Boral ^{10}B minimum loading of 0.02 g/cm^2) 204 fuel rods, 21 guide tubes, pitch=0.563, Zr clad									
Fuel Assembly Designation	maximum k_{eff}	calculated k_{eff}	standard deviation	cladding OD	cladding ID	cladding thickness	pellet OD	fuel length	guide tube thickness
15x15C01	0.9332	0.9290	0.0007	0.424	0.3640	0.0300	0.3570	150	0.0255
15x15C02	0.9373	0.9330	0.0008	0.424	0.3640	0.0300	0.3570	150	0.0165
15x15C03	0.9377	0.9335	0.0007	0.424	0.3640	0.0300	0.3565	150	0.0165
15x15C04	0.9378	0.9338	0.0007	0.417	0.3570	0.0300	0.3565	150	0.0165
Dimensions Listed in Certificate of Compliance				0.417 (min.)	0.3640 (max.)		0.3570 (max.)	150 (max.)	0.0165 (min.)
bounding dimensions (B15x15C01)	0.9444	0.9401	0.0008	0.417	0.3640	0.0265	0.3570	150	0.0165

Table 6.2.*14*~~11~~
MAXIMUM K_{EFF} VALUES FOR THE 15X15D ASSEMBLY CLASS IN THE MPC-24
(all dimensions are in inches)

15x15D (4.1% Enrichment, Boral ^{10}B minimum loading of 0.02 g/cm^2) 208 fuel rods, 17 guide tubes, pitch=0.568, Zr clad									
Fuel Assembly Designation	maximum k_{eff}	calculated k_{eff}	standard deviation	cladding OD	cladding ID	cladding thickness	pellet OD	fuel length	guide tube thickness
15x15D01	0.9423	0.9380	0.0008	0.430	0.3770	0.0265	0.3690	150	0.0160
15x15D02	0.9430	0.9386	0.0009	0.430	0.3770	0.0265	0.3686	150	0.0160
15x15D03	0.9419	0.9375	0.0009	0.430	0.3770	0.0265	0.3700	150	0.0155
15x15D04	0.9440	0.9398	0.0007	0.430	0.3800	0.0250	0.3735	150	0.0150
Dimensions Listed in Certificate of Compliance				0.430 (min.)	0.3800 (max.)		0.3735 (max.)	150 (max.)	0.0150 (min.)
bounding dimensions (15x15D04)	0.9440	0.9398	0.0007	0.430	0.3800	0.0250	0.3735	150	0.0150

Table 6.2.15~~2~~
MAXIMUM K_{EFF} VALUES FOR THE 15X15E ASSEMBLY CLASS IN THE MPC-24
(all dimensions are in inches)

15x15E (4.1% Enrichment, Boral ^{10}B minimum loading of 0.02 g/cm^2) 208 fuel rods, 17 guide tubes, pitch=0.568, Zr clad									
Fuel Assembly Designation	maximum k_{eff}	calculated k_{eff}	standard deviation	cladding OD	cladding ID	cladding thickness	pellet OD	fuel length	guide tube thickness
15x15E01	0.9475	0.9433	0.0007	0.428	0.3790	0.0245	0.3707	150	0.0140
Dimensions Listed in Certificate of Compliance				0.428 (min.)	0.3790 (max.)		0.3707 (max.)	150 (max.)	0.0140 (min.)

Table 6.2.16~~3~~
MAXIMUM K_{EFF} VALUES FOR THE 15X15F ASSEMBLY CLASS IN THE MPC-24
(all dimensions are in inches)

15x15F (4.1% Enrichment, Boral ^{10}B minimum loading of 0.02 g/cm^2) 208 fuel rods, 17 guide tubes, pitch=0.568, Zr clad									
Fuel Assembly Designation	maximum k_{eff}	calculated k_{eff}	standard deviation	cladding OD	cladding ID	cladding thickness	pellet OD	fuel length	guide tube thickness
15x15F01	0.9478†	0.9436	0.0008	0.428	0.3820	0.0230	0.3742	150	0.0140
Dimensions Listed in Certificate of Compliance				0.428 (min.)	0.3820 (max.)		0.3742 (max.)	150 (max.)	0.0140 (min.)

† KENO5a verification calculation resulted in a maximum k_{eff} of 0.9466.

Table 6.2.174
MAXIMUM K_{EFF} VALUES FOR THE 15X15G ASSEMBLY CLASS IN THE MPC-24
(all dimensions are in inches)

15x15G (4.0% Enrichment, Boral ^{10}B minimum loading of 0.02 g/cm^2) 204 fuel rods, 21 guide tubes, pitch=0.563, SS clad									
Fuel Assembly Designation	maximum k_{eff}	calculated k_{eff}	standard deviation	cladding OD	cladding ID	cladding thickness	pellet OD	fuel length	guide tube thickness
15x15G01	0.8986	0.8943	0.0008	0.422	0.3890	0.0165	0.3825	144	0.0145
Dimensions Listed in Certificate of Compliance				0.422 (min.)	0.3890 (max.)		0.3825 (max.)	144 (max.)	0.0145 (min.)

Table 6.2.18
MAXIMUM K_{EFF} VALUES FOR THE 15X15H ASSEMBLY CLASS IN THE MPC-24
(all dimensions are in inches)

15x15H (3.8% Enrichment, Boral ^{10}B minimum loading of 0.02 g/cm^2) *208 fuel rods, 17 guide tubes, pitch=0.568, Zr clad*									
Fuel Assembly Designation	*maximum k_{eff}*	*calculated k_{eff}*	*standard deviation*	*cladding OD*	*cladding ID*	*cladding thickness*	*pellet OD*	*fuel length*	*guide tube thickness*
15x15H01	*0.9411*	*0.9368*	*0.0008*	*0.414*	*0.3700*	*0.0220*	*0.3622*	*150*	*0.0140*
Dimensions Listed in Certificate of Compliance				*0.414 (min.)*	*0.3700 (max.)*		*0.3622 (max.)*	*150 (max.)*	*0.0140 (min.)*

Table 6.2.19~~5~~

MAXIMUM K_{EFF} VALUES FOR THE 16X16A ASSEMBLY CLASS IN THE MPC-24

(all dimensions are in inches)

16x16A (4.6% Enrichment, Boral ^{10}B minimum loading of 0.02 g/cm^2) 236 fuel rods, 5 guide tubes, pitch=0.506, Zr clad									
Fuel Assembly Designation	maximum k_{eff}	calculated k_{eff}	standard deviation	cladding OD	cladding ID	cladding thickness	pellet OD	fuel length	guide tube thickness
16x16A01	0.9383	0.9339	0.0009	0.382	0.3320	0.0250	0.3255	150	0.0400
16x16A02	0.9371	0.9328	0.0008	0.382	0.3320	0.0250	0.3250	150	0.0400
Dimensions Listed in Certificate of Compliance				0.382 (min.)	0.3320 (max.)		0.3255 (max.)	150 (max.)	0.0400 (min.)
bounding dimensions (16x16A01)	0.9383	0.9339	0.0009	0.382	0.3320	0.0250	0.3255	150	0.0400

Table 6.2.20~~16~~
MAXIMUM K_{EFF} VALUES FOR THE 17X17A ASSEMBLY CLASS IN THE MPC-24
(all dimensions are in inches)

17x17A (4.0% Enrichment, Boral ^{10}B minimum loading of 0.02 g/cm^2) 264 fuel rods, 25 guide tubes, pitch=0.496, Zr clad									
Fuel Assembly Designation	maximum k_{eff}	calculated k_{eff}	standard deviation	cladding OD	cladding ID	cladding thickness	pellet OD	fuel length	guide tube thickness
17x17A01	0.9449	0.9400	0.0011	0.360	0.3150	0.0225	0.3088	144	0.016
17x17A02	0.9452†	0.9408	0.0008	0.360	0.3150	0.0225	0.3088	150	0.016
17x17A03	0.9406	0.9364	0.0008	0.360	0.3100	0.0250	0.3030	150	0.016
Dimensions Listed in Certificate of Compliance				0.360 (min.)	0.3150 (max.)		0.3088 (max.)	150 (max.)	0.016 (min.)
bounding dimensions (17x17A02)	0.9452	0.9408	0.0008	0.360	0.3150	0.0225	0.3088	150	0.016

† KENO5a verification calculation resulted in a maximum k_{eff} of 0.9434.

Table 6.2.2~~17~~
MAXIMUM K_{EFF} VALUES FOR THE 17X17B ASSEMBLY CLASS IN THE MPC-24
(all dimensions are in inches)

17x17B (4.0% Enrichment, Boral ^{10}B minimum loading of 0.02 g/cm^2) 264 fuel rods, 25 guide tubes, pitch=0.496, Zr clad									
Fuel Assembly Designation	maximum k_{eff}	calculated k_{eff}	standard deviation	Cladding OD	cladding ID	cladding thickness	pellet OD	fuel length	guide tube thickness
17x17B01	0.9377	0.9335	0.0008	0.374	0.3290	0.0225	0.3225	150	0.016
17x17B02	0.9379	0.9337	0.0008	0.374	0.3290	0.0225	0.3225	150	0.016
17x17B03	0.9330	0.9288	0.0008	0.376	0.3280	0.0240	0.3215	150	0.016
17x17B04	0.9407	0.9365	0.0007	0.372	0.3310	0.0205	0.3232	150	0.014
17x17B05	0.9349	0.9305	0.0009	0.374	0.3260	0.0240	0.3195	150	0.016
17x17B06	0.9436	0.9393	0.0008	0.372	0.3310	0.0205	0.3232	150	0.014
Dimensions Listed in Certificate of Compliance				0.372 (min.)	0.3310 (max.)		0.3232 (max.)	150 (max.)	0.014 (min.)
bounding dimensions (17x17B06)	0.9436	0.9393	0.0008	0.372	0.3310	0.0205	0.3232	150	0.014

Table 6.2.22~~18~~
MAXIMUM K_{EFF} VALUES FOR THE 17X17C ASSEMBLY CLASS IN THE MPC-24
(all dimensions are in inches)

17x17C (4.0% Enrichment, Boral ^{10}B minimum loading of 0.02 g/cm^2) 264 fuel rods, 25 guide tubes, pitch=0.502, Zr clad									
Fuel Assembly Designation	maximum k_{eff}	calculated k_{eff}	standard deviation	cladding OD	cladding ID	cladding thickness	pellet OD	fuel length	guide tube thickness
17x17C01	0.9383	0.9339	0.0008	0.379	0.3310	0.0240	0.3232	150	0.020
17x17C02	0.9427	0.9384	0.0008	0.377	0.3330	0.0220	0.3252	150	0.020
Dimensions Listed in Certificate of Compliance				0.377 (min.)	0.3330 (max.)		0.3252 (max.)	150 (max.)	0.020 (min.)
bounding dimensions (17x17C02)	0.9427	0.9384	0.0008	0.377	0.3330	0.0220	0.3252	150	0.020

Table 6.2.*23*~~19~~
MAXIMUM K_{EFF} VALUES FOR THE 7X7B ASSEMBLY CLASS IN THE MPC-68 *and MPC-68FF*
(all dimensions are in inches)

7x7B (4.2% Enrichment, Boral ^{10}B minimum loading of 0.0279 g/cm^2) 49 fuel rods, 0 water rods, pitch=0.738, Zr clad										
Fuel Assembly Designation	maximum k_{eff}	calculated k_{eff}	standard deviation	cladding OD	cladding ID	cladding thickness	pellet OD	fuel length	water rod thickness	channel thickness
7x7B01	0.9372	0.9330	0.0007	0.5630	0.4990	0.0320	0.4870	150	n/a	0.080
7x7B02	0.9301	0.9260	0.0007	0.5630	0.4890	0.0370	0.4770	150	n/a	0.102
7x7B03	0.9313	0.9271	0.0008	0.5630	0.4890	0.0370	0.4770	150	n/a	0.080
7x7B04	0.9311	0.9270	0.0007	0.5700	0.4990	0.0355	0.4880	150	n/a	0.080
7x7B05	0.9350	0.9306	0.0008	0.5630	0.4950	0.0340	0.4775	150	n/a	0.080
7x7B06	*0.9298*	*0.9260*	*0.0006*	*0.5700*	*0.4990*	*0.0355*	*0.4910*	*150*	*n/a*	*0.080*
Dimensions Listed in Certificate of Compliance				0.5630 (min.)	0.4990 (max.)		0.4~~880~~*910* (max.)	150 (max.)	n/a	0.120 (max.)
bounding dimensions (B7x7B01)	0.937~~8~~*5*	0.933~~5~~*2*	0.0008	0.5630	0.4990	0.0320	0.4~~880~~*910*	150	n/a	0.102
bounding dimensions with 120 mil channel (B7x7B02)	0.93~~75~~*86*	0.93~~32~~*44*	0.000~~8~~*7*	0.5630	0.4990	0.0320	0.4~~880~~*910*	150	n/a	0.120

Table 6.2.*24*~~20~~
MAXIMUM K_{EFF} VALUES FOR THE 8X8B ASSEMBLY CLASS IN THE MPC-68 *and MPC-68FF*
(all dimensions are in inches)

8x8B (4.2% Enrichment, Boral ^{10}B minimum loading of 0.0279 g/cm^2) 63 *or 64* fuel rods†, 1 *or 0* water rods†, pitch† = 0.636-0.64~~1~~*2*, Zr clad												
Fuel Assembly Designation	maximum k_{eff}	calculated k_{eff}	standard deviation	*Fuel rods*	Pitch	cladding OD	cladding ID	cladding thickness	pellet OD	fuel length	water rod thickness	channel thickness
8x8B01	0.9310	0.9265	0.0009	*63*	0.641	0.4840	0.4140	0.0350	0.4050	150	0.035	0.100
8x8B02	0.9227	0.9185	0.0007	*63*	0.636	0.4840	0.4140	0.0350	0.4050	150	0.035	0.100
8x8B03	0.9299	0.9257	0.0008	*63*	0.640	0.4930	0.4250	0.0340	0.4160	150	0.034	0.100
8x8B04	*0.9236*	*0.9194*	*0.0008*	*64*	*0.642*	*0.5015*	*0.4295*	*0.0360*	*0.4195*	*150*	*n/a*	*0.100*
Dimensions Listed in Certificate of Compliance				*63 or 64*	0.636-0.64~~1~~*2*	0.4840 (min.)	0.42~~5~~*095* (max.)		0.41~~6~~*095* (max.)	150 (max.)	0.034	0.120 (max.)
bounding (pitch=0.636) (B8x8B01)	0.93~~1~~*746*	0.92~~74~~*301*	0.000~~8~~*9*	*63*	0.636	0.4840	0.42~~5~~*095*	0.02~~95~~*725*	0.41~~6~~*095*	150	0.034	0.120
bounding (pitch=0.640) (B8x8B02)	0.93~~5~~*785*	0.93~~1~~*543*	0.0008	*63*	0.640	0.4840	0.42~~5~~*095*	0.02~~95~~*725*	0.41~~6~~*095*	150	0.034	0.120
bounding (pitch=0.64~~1~~*2*) (B8x8B03)	0.9~~368~~*416*	0.93~~2~~*775*	0.0007	*63*	0.64~~1~~*2*	0.4840	0.42~~5~~*095*	0.02~~95~~*725*	0.41~~6~~*095*	150	0.034	0.120

† This assembly class was analyzed and qualified for a small variation in the pitch *and a variation in the number of fuel and water rods.*

Table 6.2.25~~21~~
MAXIMUM K_{EFF} VALUES FOR THE 8X8C ASSEMBLY CLASS IN THE MPC-68 *and MPC-68FF*
(all dimensions are in inches)

8x8C (4.2% Enrichment, Boral ^{10}B minimum loading of 0.0279 g/cm^2) 62 fuel rods, 2 water rods, pitch† = 0.636-0.641, Zr clad											
Fuel Assembly Designation	maximum k_{eff}	calculated k_{eff}	standard deviation	pitch	cladding OD	cladding ID	cladding thickness	pellet OD	fuel length	water rod thickness	channel thickness
8x8C01	0.9315	0.9273	0.0007	0.641	0.4840	0.4140	0.0350	0.4050	150	0.035	0.100
8x8C02	0.9313	0.9268	0.0009	0.640	0.4830	0.4190	0.0320	0.4100	150	0.030	0.000
8x8C03	0.9329	0.9286	0.0008	0.640	0.4830	0.4190	0.0320	0.4100	150	0.030	0.800
8x8C04	0.9348††	0.9307	0.0007	0.640	0.4830	0.4190	0.0320	0.4100	150	0.030	0.100
8x8C05	0.9353	0.9312	0.0007	0.640	0.4830	0.4190	0.0320	0.4100	150	0.030	0.120
8x8C06	0.9353	0.9312	0.0007	0.640	0.4830	0.4190	0.0320	0.4110	150	0.030	0.100
8x8C07	0.9314	0.9273	0.0007	0.640	0.4830	0.4150	0.0340	0.4100	150	0.030	0.100
8x8C08	0.9339	0.9298	0.0007	0.640	0.4830	0.4190	0.0320	0.4100	150	0.034	0.100
8x8C09	0.9301	0.9260	0.0007	0.640	0.4930	0.4250	0.0340	0.4160	150	0.034	0.100
8x8C10	0.9317	0.9275	0.0008	0.640	0.4830	0.4150	0.0340	0.4100	150	0.030	0.120
8x8C11	0.9328	0.9287	0.0007	0.640	0.4830	0.4150	0.0340	0.4100	150	0.030	0.120
8x8C12	0.9285	0.9242	0.0008	0.636	0.4830	0.4190	0.0320	0.4110	150	0.030	0.120
Dimensions Listed in Certificate of Compliance				0.636-0.641	0.4830 (min.)	0.4250 (max.)		0.4160 (max.)	150 (max.)	0.000 (min.)	0.120 (max.)
bounding (pitch=0.636) (B8x8C01)	0.9357	0.9313	0.0009	0.636	0.4830	0.4250	0.0290	0.4160	150	0.000	0.120
bounding (pitch=0.640) (B8x8C02)	0.9425	0.9384	0.0007	0.640	0.4830	0.4250	0.0290	0.4160	150	0.000	0.120
Bounding (pitch=0.641) (B8x8C03)	0.9418	0.9375	0.0008	0.641	0.4830	0.4250	0.0290	0.4160	150	0.000	0.120

† This assembly class was analyzed and qualified for a small variation in the pitch.
†† KENO5a verification calculation resulted in a maximum k_{eff} of 0.9343.

Table 6.2.*26*~~22~~
MAXIMUM K_{EFF} VALUES FOR THE 8X8D ASSEMBLY CLASS IN THE MPC-68 *and MPC-68FF*
(all dimensions are in inches)

8x8D (4.2% Enrichment, Boral ^{10}B minimum loading of 0.0279 g/cm^2) 60-*61* fuel rods, 1-4 water rods†, pitch=0.640, Zr clad										
Fuel Assembly Designation	maximum k_{eff}	calculated k_{eff}	standard deviation	Cladding OD	cladding ID	cladding thickness	pellet OD	fuel length	water rod thickness	channel thickness
8x8D01	0.9342	0.9302	0.0006	0.4830	0.4190	0.0320	0.4110	150	0.03/0.025	0.100
8x8D02	0.9325	0.9284	0.0007	0.4830	0.4190	0.0320	0.4110	150	0.030	0.100
8x8D03	0.9351	0.9309	0.0008	0.4830	0.4190	0.0320	0.4110	150	0.025	0.100
8x8D04	0.9338	0.9296	0.0007	0.4830	0.4190	0.0320	0.4110	150	0.040	0.100
8x8D05	0.9339	0.9294	0.0009	0.4830	0.4190	0.0320	0.4100	150	0.040	0.100
8x8D06	0.9365	0.9324	0.0007	0.4830	0.4190	0.0320	0.4110	150	0.040	0.120
8x8D07	0.9341	0.9297	0.0009	0.4830	0.4190	0.0320	0.4110	150	0.040	0.080
8x8D08	*0.9376*	*0.9332*	*0.0009*	*0.4830*	*0.4230*	*0.0300*	*0.4140*	*150*	*0.030*	*0.080*
Dimensions Listed in Certificate of Compliance				0.4830 (min.)	0.4~~190~~*230* (max.)		0.41~~10~~*40* (max.)	150 (max.)	0.000 (min.)	0.120 (max.)
bounding dimensions (B8x8D01)	0.9~~366~~*403*	0.93~~23~~*63*	0.0007~~8~~	0.4830	0.4~~190~~*230*	0.03~~20~~*00*	0.41~~10~~*40*	150	0.000	0.120

† Fuel assemblies 8x8D01 through 8x8D03 have 4 water rods that are similar in size to the fuel rods, while assemblies 8x8D04 through 8x8D07 have 1 large water rod that takes the place of the 4 water rods. *Fuel assembly 8x8D08 contains 3 water rods that are similar in size to the fuel rods.*

Table 6.2.273
MAXIMUM K_{EFF} VALUES FOR THE 8X8E ASSEMBLY CLASS IN THE MPC-68 *and MPC-68FF*
(all dimensions are in inches)

8x8E (4.2% Enrichment, Boral ^{10}B minimum loading of 0.0279 g/cm^2) 59 fuel rods, 5 water rods, pitch=0.640, Zr clad										
Fuel Assembly Designation	maximum k_{eff}	calculated k_{eff}	standard deviation	cladding OD	cladding ID	cladding thickness	pellet OD	fuel length	water rod thickness	channel thickness
8x8E01	0.9312	0.9270	0.0008	0.4930	0.4250	0.0340	0.4160	150	0.034	0.100
Dimensions Listed in Certificate of Compliance				0.4930 (min.)	0.4250 (max.)		0.4160 (max.)	150 (max.)	0.034 (min.)	0.100 (max.)

Table 6.2.28
MAXIMUM K_{EFF} VALUES FOR THE 8X8F ASSEMBLY CLASS IN THE MPC-68 and MPC-68FF
(all dimensions are in inches)

8x8F (4.0% Enrichment, Boral ^{10}B minimum loading of 0.0279 g/cm^2) *64 fuel rods, 4 rectangular water cross segments dividing the assembly into four quadrants, pitch=0.609, Zr clad*										
Fuel Assembly Designation	*maximum k_{eff}*	*calculated k_{eff}*	*standard deviation*	*cladding OD*	*cladding ID*	*cladding thickness*	*pellet OD*	*fuel length*	*water rod thickness*	*channel thickness*
8x8F01	*0.9411*	*0.9366*	*0.0009*	*0.4576*	*0.3996*	*0.0290*	*0.3913*	*150*	*0.0315*	*0.055*
Dimensions Listed in Certificate of Compliance				*0.4576 (min.)*	*0.3996 (max.)*		*0.3913 (max.)*	*150 (max.)*	*0.0315 (min.)*	*0.055 (max.)*

Table 6.2.294
MAXIMUM K_{EFF} VALUES FOR THE 9X9A ASSEMBLY CLASS IN THE MPC-68 *and MPC-68FF*
(all dimensions are in inches)

9x9A (4.2% Enrichment, Boral ^{10}B minimum loading of 0.0279 g/cm^2) 74/66 fuel rods†, 2 water rods, pitch=0.566, Zr clad										
Fuel Assembly Designation	maximum k_{eff}	calculated k_{eff}	standard deviation	cladding OD	cladding ID	cladding thickness	pellet OD	fuel length	water rod thickness	channel thickness
9x9A01 (axial segment with all rods)	0.9353	0.9310	0.0008	0.4400	0.3840	0.0280	0.3760	150	0.030	0.100
9x9A02 (axial segment with only the full length rods)	0.9388	0.9345	0.0008	0.4400	0.3840	0.0280	0.3760	150	0.030	0.100
9x9A03 (actual three-dimensional representation of all rods)	0.9351	0.9310	0.0007	0.4400	0.3840	0.0280	0.3760	150/90	0.030	0.100
9x9A04 (axial segment with only the full length rods)	0.9396	0.9355	0.0007	0.4400	0.3840	0.0280	0.3760	150	0.030	0.120
Dimensions Listed in Certificate of Compliance				0.4400 (min.)	0.3840 (max.)		0.3760 (max.)	150 (max.)	0.000 (min.)	0.120 (max.)
bounding dimensions (axial segment with only the full length rods) (B9x9A01)	0.9417	0.9374	0.0008	0.4400	0.3840	0.0280	0.3760	150	0.000	0.120

† This assembly class contains 66 full length rods and 8 partial length rods. In order to eliminate a requirement on the length of the partial length rods, separate calculations were performed for the axial segments with and without the partial length rods.

Table 6.2.*30*~~25~~
MAXIMUM K_{EFF} VALUES FOR THE 9X9B ASSEMBLY CLASS IN THE MPC-68 *and MPC-68FF*
(all dimensions are in inches)

9x9B (4.2% Enrichment, Boral ^{10}B minimum loading of 0.0279 g/cm^2) 72 fuel rods, 1 water rod (square, replacing 9 fuel rods), pitch=0.569 *to 0.572*†, Zr clad											
Fuel Assembly Designation	maximum k_{eff}	calculated k_{eff}	standard deviation	*pitch*	cladding OD	cladding ID	cladding thickness	pellet OD	fuel length	water rod thickness	channel thickness
9x9B01	0.93~~6~~*880*	0.93~~2~~*636*	0.0007~~8~~*8*	*0.569*	0.4330	0.3807	0.0262	0.3737	150	0.0285	0.100
9x9B02	0.9377~~3~~*3*	0.93~~3~~*429*	0.0008~~9~~*9*	*0.569*	0.4330	0.3810	0.0260	0.3737	150	0.0285	0.100
9x9B03	*0.9417*	*0.9374*	*0.0008*	*0.572*	*0.4330*	*0.3810*	*0.0260*	*0.3737*	*150*	*0.0285*	*0.100*
Dimensions Listed in Certificate of Compliance				*0.572*	0.4330 (min.)	0.3810 (max.)		0.3740 (max.)	150 (max.)	0.000 (min.)	0.120 (max.)
bounding dimensions (B9x9B01)	0.9~~388~~*436*	0.934~~6~~*94*	0.0007~~8~~*8*	*0.572*	0.4330	0.3810	0.0260	0.3740††	150	0.000	0.120

† *This assembly class was analyzed and qualified for a small variation in the pitch.*
†† This value was conservatively defined to be larger than any of the actual pellet diameters.

Table 6.2.*31*~~26~~
MAXIMUM K_{EFF} VALUES FOR THE 9X9C ASSEMBLY CLASS IN THE MPC-68 *and MPC-68FF*
(all dimensions are in inches)

9x9C (4.2% Enrichment, Boral ^{10}B minimum loading of 0.0279 g/cm^2) 80 fuel rods, 1 water rods, pitch=0.572, Zr clad										
Fuel Assembly Designation	maximum k_{eff}	calculated k_{eff}	standard deviation	cladding OD	cladding ID	cladding thickness	pellet OD	fuel length	water rod thickness	channel thickness
9x9C01	0.9395	0.9352	0.0008	0.4230	0.3640	0.0295	0.3565	150	0.020	0.100
Dimensions Listed in Certificate of Compliance				0.4230 (min.)	0.3640 (max.)		0.3565 (max.)	150 (max.)	0.020 (min.)	0.100 (max.)

Table 6.2.*32*~~27~~
MAXIMUM K_{EFF} VALUES FOR THE 9X9D ASSEMBLY CLASS IN THE MPC-68 *and MPC-68FF*
(all dimensions are in inches)

9x9D (4.2% Enrichment, Boral ^{10}B minimum loading of 0.0279 g/cm^2) 79 fuel rods, 2 water rods, pitch=0.572, Zr clad										
Fuel Assembly Designation	maximum k_{eff}	calculated k_{eff}	standard deviation	cladding OD	cladding ID	cladding thickness	pellet OD	fuel length	water rod thickness	channel thickness
9x9D01	0.9394~~2~~	0.935~~049~~	0.0008~~9~~	0.4240	0.3640	0.0300	0.3565	150	0.0305~~0~~	0.100
Dimensions Listed in Certificate of Compliance				0.4240 (min.)	0.3640 (max.)		0.3565 (max.)	150 (max.)	0.0305~~0~~ (min.)	0.100 (max.)

Table 6.2.*33*~~28~~
MAXIMUM K_{EFF} VALUES FOR THE 9X9E ASSEMBLY CLASS IN THE MPC-68 *and MPC-68FF*

(all dimensions are in inches)

9x9E (4.~~2~~*0*% Enrichment, Boral ^{10}B minimum loading of 0.0279 g/cm^2) 76 fuel rods, 5 water rods, pitch=0.572, Zr clad										
Fuel Assembly Designation	maximum k_{eff}	calculated k_{eff}	standard deviation	cladding OD	cladding ID	cladding thickness	pellet OD	fuel length	water rod thickness	channel thickness
9x9E01	0.9334~~406~~	0.9293~~362~~	0.0008~~7~~	0.4170	0.3640~~590~~	0.0265~~90~~	0.3530~~25~~	150	0.0120~~305~~	0.1200~~0~~
9x9E02	*0.9401*	*0.9359*	*0.0008*	*0.4170* *0.4430*	*0.3640* *0.3860*	*0.0265* *0.0285*	*0.3530* *0.3745*	*150*	*0.0120*	*0.120*
Dimensions Listed in Certificate of Compliance†				0.4170 (min.)	0.3~~590~~*640* (max.)		0.3530~~25~~ (max.)	150 (max.)	0.0120~~305~~ (min.)	0.1200~~0~~ (max.)
bounding dimensions (9x9E02)	*0.9401*	*0.9359*	*0.0008*	*0.4170* *0.4430*	*0.3640* *0.3860*	*0.0265* *0.0285*	*0.3530* *0.3745*	*150*	*0.0120*	*0.120*

† *This fuel assembly, also known as SPC 9x9-5, contains fuel rods with different cladding and pellet diameters which do not bound each other. To be consistent in the way fuel assemblies are listed in the Certificate of Compliance, two assembly classes (9x9E and 9x9F) are required to specify this assembly. Each class contains the actual geometry (9x9E02 and 9x9F02), as well as a hypothetical geometry with either all small rods (9x9E01) or all large rods (9x9F01). The Certificate of Compliance lists the small rod dimensions for class 9x9E and the large rod dimensions for class 9x9F, and a note that both classes are used to qualify the assembly. The analyses demonstrate that all configurations, including the actual geometry, are acceptable.*

Table 6.2.*34*~~29~~

MAXIMUM K_{EFF} VALUES FOR THE 9X9F ASSEMBLY CLASS IN THE MPC-68 *and MPC-68FF*

(all dimensions are in inches)

9x9F (4.*2*~~0~~% Enrichment, Boral ^{10}B minimum loading of 0.0279 g/cm^2) 76 fuel rods, 5 water rods, pitch=0.572, Zr clad										
Fuel Assembly Designation	maximum k_{eff}	calculated k_{eff}	standard deviation	cladding OD	cladding ID	cladding thickness	pellet OD	fuel length	water rod thickness	channel thickness
9x9F01	0.930*77*~~77~~	0.926*5*~~335~~	0.0007	0.4430	0.386*0*~~10~~	0.0285~~310~~	0.3745	150	0.0*120*~~305~~	0.12*0*~~00~~
9x9F02	*0.9401*	*0.9359*	*0.0008*	*0.4170* *0.4430*	*0.3640* *0.3860*	*0.0265* *0.0285*	*0.3530* *0.3745*	*150*	*0.0120*	*0.120*
Dimensions Listed in Certificate of Compliance†				0.4430 (min.)	0.38~~10~~*60* (max.)		0.3745 (max.)	150 (max.)	0.0~~305~~*120* (min.)	0.1~~00~~*20* (max.)
bounding dimensions (9x9F02)	*0.9401*	*0.9359*	*0.0008*	*0.4170* *0.4430*	*0.3640* *0.3860*	*0.0265* *0.0285*	*0.3530* *0.3745*	*150*	*0.0120*	*0.120*

† *This fuel assembly, also known as SPC 9x9-5, contains fuel rods with different cladding and pellet diameters which do not bound each other. To be consistent in the way fuel assemblies are listed in the Certificate of Compliance, two assembly classes (9x9E and 9x9F) are required to specify this assembly. Each class contains the actual geometry (9x9E02 and 9x9F02), as well as a hypothetical geometry with either all small rods (9x9E01) or all large rods (9x9F01). The Certificate of Compliance lists the small rod dimensions for class 9x9E and the large rod dimensions for class 9x9F, and a note that both classes are used to qualify the assembly. The analyses demonstrate that all configurations, including the actual geometry, are acceptable.*

Table 6.2.35
MAXIMUM K_{EFF} VALUES FOR THE 9X9G ASSEMBLY CLASS IN THE MPC-68 and MPC-68FF
(all dimensions are in inches)

9x9G (4.2% Enrichment, Boral ^{10}B minimum loading of 0.0279 g/cm^2) 72 fuel rods, 1 water rod (square, replacing 9 fuel rods), pitch=0.572, Zr clad										
Fuel Assembly Designation	maximum k_{eff}	calculated k_{eff}	standard deviation	cladding OD	cladding ID	cladding thickness	pellet OD	fuel length	water rod thickness	channel thickness
9x9G01	0.9309	0.9265	0.0008	0.4240	0.3640	0.0300	0.3565	150	0.0320	0.120
Dimensions Listed in Certificate of Compliance				0.4240 (min.)	0.3640 (max.)		0.3565 (max.)	150 (max.)	0.0320 (min.)	0.120 (max.)

Table 6.2.3~~630~~

MAXIMUM K_{EFF} VALUES FOR THE 10X10A ASSEMBLY CLASS IN THE MPC-68 *and MPC-68FF*

(all dimensions are in inches)

10x10A (4.2% Enrichment, Boral ^{10}B minimum loading of 0.0279 g/cm^2) 92/78 fuel rods†, 2 water rods, pitch=0.510, Zr clad										
Fuel Assembly Designation	maximum k_{eff}	calculated k_{eff}	standard deviation	cladding OD	cladding ID	cladding thickness	pellet OD	fuel length	water rod thickness	channel thickness
10x10A01 (axial segment with all rods)	0.9377	0.9335	0.0008	0.4040	0.3520	0.0260	0.3450	155	0.030	0.100
10x10A02 (axial segment with only the full length rods)	0.9426	0.9386	0.0007	0.4040	0.3520	0.0260	0.3450	155	0.030	0.100
10x10A03 (actual three-dimensional representation of all rods)	0.9396	0.9356	0.0007	0.4040	0.3520	0.0260	0.3450	155/90	0.030	0.100
Dimensions Listed in Certificate of Compliance				0.4040 (min.)	0.3520 (max.)		0.3455 (max.)	150†† (max.)	0.030 (min.)	0.120 (max.)
bounding dimensions (axial segment with only the full length rods) (B10x10A01)	0.9457†††	0.9414	0.0008	0.4040	0.3520	0.0260	0.3455‡	155	0.030	0.120

† This assembly class contains 78 full-length rods and 14 partial-length rods. In order to eliminate the requirement on the length of the partial length rods, separate calculations were performed for axial segments with and without the partial length rods.

†† Although the analysis qualifies this assembly for a maximum active fuel length of 155 inches, the Certificate of Compliance limits the active fuel length to 150 inches. This is due to the fact that the Boral panels are 156 inches in length.

††† KENO5a verification calculation resulted in a maximum k_{eff} of 0.9453.

‡ This value was conservatively defined to be larger than any of the actual pellet diameters.

Table 6.2.3~~731~~
MAXIMUM K_{EFF} VALUES FOR THE 10X10B ASSEMBLY CLASS IN THE MPC-68 *and MPC-68FF*
(all dimensions are in inches)

10x10B (4.2% Enrichment, Boral ^{10}B minimum loading of 0.0279 g/cm^2) 91/83 fuel rods†, 1 water rods (square, replacing 9 fuel rods), pitch=0.510, Zr clad										
Fuel Assembly Designation	maximum k_{eff}	calculated k_{eff}	standard deviation	cladding OD	cladding ID	cladding thickness	pellet OD	fuel length	water rod thickness	channel thickness
10x10B01 (axial segment with all rods)	0.9384	0.9341	0.0008	0.3957	0.3480	0.0239	0.3413	155	0.0285	0.100
10x10B02 (axial segment with only the full length rods)	0.9416	0.9373	0.0008	0.3957	0.3480	0.0239	0.3413	155	0.0285	0.100
10x10B03 (actual three-dimensional representation of all rods)	0.9375	0.9334	0.0007	0.3957	0.3480	0.0239	0.3413	155/90	0.0285	0.100
Dimensions Listed in Certificate of Compliance				0.3957 (min.)	0.3480 (max.)		0.3420 (max.)	150†† (max.)	0.000 (min.)	0.120 (max.)
bounding dimensions (axial segment with only the full length rods) (B10x10B01)	0.9436	0.9395	0.0007	0.3957	0.3480	0.0239	0.3420†††	155	0.000	0.120

† This assembly class contains 83 full length rods and 8 partial length rods. In order to eliminate a requirement on the length of the partial length rods, separate calculations were performed for the axial segments with and without the partial length rods.

†† Although the analysis qualifies this assembly for a maximum active fuel length of 155 inches, the Certificate of Compliance limits the active fuel length to 150 inches. This is due to the fact that the Boral panels are 156 inches in length.

††† This value was conservatively defined to be larger than any of the actual pellet diameters.

Table 6.2.3~~82~~

MAXIMUM K_{EFF} VALUES FOR THE 10X10C ASSEMBLY CLASS IN THE MPC-68 *and MPC-68FF*

(all dimensions are in inches)

10x10C (4.2% Enrichment, Boral ^{10}B minimum loading of 0.0279 g/cm^2) 96 fuel rods, 5 water rods (1 center diamond and 4 rectangular), pitch=0.488, Zr clad										
Fuel Assembly Designation	maximum k_{eff}	calculated k_{eff}	standard deviation	cladding OD	cladding ID	cladding thickness	pellet OD	fuel length	water rod thickness	channel thickness
10x10C01	0.~~89~~~~90~~*9433*	0.~~89~~~~49~~*9392*	0.0007	0.37~~90~~*80*	0.3294	0.0243~~8~~	0.3224	150	0.034*1*	0.055
Dimensions Listed in Certificate of Compliance				0.37*8*~~090~~ (min.)	0.3294 (max.)		0.3224 (max.)	150 (max.)	0.03*1*4 (min.)	0.055 (max.)

Table 6.2.39~~3~~

MAXIMUM K_{EFF} VALUES FOR THE 10X10D ASSEMBLY CLASS IN THE MPC-68 *and MPC-68FF*

(all dimensions are in inches)

10x10D (4.0% Enrichment, Boral ^{10}B minimum loading of 0.0279 g/cm^2) 100 fuel rods, 0 water rods, pitch=0.565, SS clad										
Fuel Assembly Designation	maximum k_{eff}	calculated k_{eff}	standard deviation	cladding OD	cladding ID	cladding thickness	pellet OD	fuel length	water rod thickness	channel thickness
10x10D01	0.9376	0.9333	0.0008	0.3960	0.3560	0.0200	0.350	83	n/a	0.080
Dimensions Listed in Certificate of Compliance				0.3960 (min.)	0.3560 (max.)		0.350 (max.)	83 (max.)	n/a	0.080 (max.)

Table 6.2.*40*~~34~~
MAXIMUM K_{EFF} VALUES FOR THE 10X10E ASSEMBLY CLASS IN THE MPC-68 *and MPC-68FF*

(all dimensions are in inches)

10x10E (4.0% Enrichment, Boral ^{10}B minimum loading of 0.0279 g/cm^2) 96 fuel rods, 4 water rods, pitch=0.557, SS clad										
Fuel Assembly Designation	maximum k_{eff}	calculated k_{eff}	standard deviation	cladding OD	cladding ID	cladding thickness	pellet OD	fuel length	water rod thickness	channel thickness
10x10E01	0.9185	0.9144	0.0007	0.3940	0.3500	0.0220	0.3430	83	0.022	0.080
Dimensions Listed in Certificate of Compliance				0.3940 (min.)	0.3500 (max.)		0.3430 (max.)	83 (max.)	0.022 (min.)	0.080 (max.)

Table 6.2.*41*~~35~~
MAXIMUM K_{EFF} VALUES FOR THE 6X6A ASSEMBLY CLASS IN THE MPC-68F *and MPC-68FF*
(all dimensions are in inches)

6x6A (3.0% Enrichment†, Boral ^{10}B minimum loading of 0.0067 g/cm^2) *35 or* 36 fuel rods††, *1 or* 0 water rods††, pitch††=0.694 *to 0.710*, Zr clad												
Fuel Assembly Designation	maximum k_{eff}	calculated k_{eff}	standard deviation	*pitch*	*fuel rods*	cladding OD	cladding ID	cladding thickness	pellet OD	fuel length	water rod thickness	channel thickness
6x6A01	0.7539	0.7498	0.0007	*0.694*	*36*	0.5645	0.4945	0.0350	0.4940	110	n/a	0.060
6x6A02	0.7517	0.7476	0.0007	*0.694*	*36*	0.5645	0.4925	0.0360	0.4820	110	n/a	0.060
6x6A03	0.7545	0.7501	0.0008	*0.694*	*36*	0.5645	0.4945	0.0350	0.4820	110	n/a	0.060
6x6A04	0.7537	0.7494	0.0008	*0.694*	*36*	0.5550	0.4850	0.0350	0.4820	110	n/a	0.060
6x6A05	*0.7555*	*0.7512*	*0.0008*	*0.696*	*36*	*0.5625*	*0.4925*	*0.0350*	*0.4820*	*110*	*n/a*	*0.060*
6x6A06	*0.7618*	*0.7576*	*0.0008*	*0.696*	*35*	*0.5625*	*0.4925*	*0.0350*	*0.4820*	*110*	*0.0*	*0.060*
6x6A07	*0.7588*	*0.7550*	*0.0007*	*0.700*	*36*	*0.5555*	*0.4850*	*0.03525*	*0.4780*	*110*	*n/a*	*0.060*
6x6A08	*0.7808*	*0.7766*	*0.0007*	*0.710*	*36*	*0.5625*	*0.5105*	*0.0260*	*0.4980*	*110*	*n/a*	*0.060*
Dimensions Listed in Certificate of Compliance				*0.710 (max.)*	*35 or 36*	0.5550 (min.)	~~0.4945~~ *0.5105* (max.)	*0.02225*	~~0.4940~~ *0.4980* (max.)	~~110~~ *120* (max.)	~~n/a~~*0.0*	0.060 (max.)
bounding dimensions (B6x6A01)	~~0.7602~~ *0.7727*	~~0.7562~~ *0.7685*	0.000~~6~~*7*	*0.694*	*35*	0.5550	~~0.4945~~ *0.5105*	~~0.3030~~ *0.02225*	~~0.4940~~ *0.4980*	~~110~~ *120*	~~n/a~~*0.0*	0.060
bounding dimensions (B6x6A02)	*0.7782*	*0.7738*	*0.0008*	*0.700*	*35*	*0.5550*	*0.5105*	*0.02225*	*0.4980*	*120*	*0.0*	*0.060*
bounding dimensions (B6x6A03)	*0.7888*	*0.7846*	*0.0007*	*0.710*	*35*	*0.5550*	*0.5105*	*0.02225*	*0.4980*	*120*	*0.0*	*0.060*

† Although the calculations were performed for 3.0%, the enrichment is limited in the Certificate of Compliance to 2.7%.
†† This assembly class was analyzed and qualified for a small variation in the pitch and a variation in the number of fuel and water rods.

Table 6.2.4~~236~~

MAXIMUM K_{EFF} VALUES FOR THE 6X6B ASSEMBLY CLASS IN THE MPC-68F *and MPC-68FF*

(all dimensions are in inches)

6x6B (3.0% Enrichment†, Boral ^{10}B minimum loading of 0.0067 g/cm^2) *35 or* 36 fuel rods†† (*up to* 9 MOX rods), *1 or* 0 water rods††, pitch††=0.694 *to 0.710*, Zr clad												
Fuel Assembly Designation	maximum k_{eff}	calculated k_{eff}	standard deviation	*pitch*	*fuel rods*	cladding OD	cladding ID	cladding thickness	pellet OD	fuel length	water rod thickness	channel thickness
6x6B01	~~0.7598~~ *0.7604*	~~0.7555~~ *0.7563*	~~0.0008~~ *0.0007*	*0.694*	*36*	0.5645	0.4945	0.0350	0.4820	110	n/a	0.060
6x6B02	~~0.7609~~ *0.7618*	~~0.7567~~ *0.7577*	~~0.0007~~ *0.0007*	*0.694*	*36*	0.5625	0.4925	0.0350	0.4820	110	n/a	0.060
6x6B03	*0.7619*	*0.7578*	*0.0007*	*0.696*	*36*	*0.5625*	*0.4925*	*0.0350*	*0.4820*	*110*	*n/a*	*0.060*
6x6B04	*0.7686*	*0.7644*	*0.0008*	*0.696*	*35*	*0.5625*	*0.4925*	*0.0350*	*0.4820*	*110*	*0.0*	*0.060*
6x6B05	*0.7824*	*0.7785*	*0.0006*	*0.710*	*35*	*0.5625*	*0.4925*	*0.0350*	*0.4820*	*110*	*0.0*	*0.060*
Dimensions Listed in Certificate of Compliance				*0.710 (max.)*	*35 or 36*	0.5625 (min.)	0.4945 (max.)		0.4820 (max.)	~~110~~ *120* (max.)	~~n/a~~*0.0*	0.060 (max.)
bounding dimensions (B6x6B01)	~~0.7611~~ *0.7822†††*	~~0.7570~~ *0.7783*	~~0.0007~~ *0.0006*	*0.710*	*35*	0.5625	0.4945	0.0340	0.4820	~~110~~ *120*	~~n/a~~*0.0*	0.060

Note:

1. These assemblies ~~consist of~~ *contain up to* 9 MOX pins~~ and 27 UO_2 pins~~. The composition of the MOX fuel pins is given in Table 6.3.4.

† The ^{235}U enrichment of the MOX and UO_2 pins is assumed to be 0.711% and 3.0%, respectively.

†† *This assembly class was analyzed and qualified for a small variation in the pitch and a variation in the number of fuel and water rods.*

††† *The k_{eff} value listed for the 6x6B05 case is slightly higher than that for the case with the bounding dimensions. However, the difference (0.0002) is well within the statistical uncertainties, and thus, the two values are statistically equivalent (within 1σ). Therefore, the 0.7824 value is listed in Tables 6.1.7 and 6.1.8 as the maximum.*

Table 6.2.*4*~~37~~
MAXIMUM K_{EFF} VALUES FOR THE 6X6C ASSEMBLY CLASS IN THE MPC-68F *and MPC-68FF*

(all dimensions are in inches)

6x6C (3.0% Enrichment†, Boral ^{10}B minimum loading of 0.0067 g/cm^2) 36 fuel rods, 0 water rods, pitch=0.740, Zr clad										
Fuel Assembly Designation	maximum k_{eff}	calculated k_{eff}	standard deviation	cladding OD	cladding ID	cladding thickness	pellet OD	fuel length	water rod thickness	channel thickness
6x6C01	0.8021	0.7980	0.0007	0.5630	0.4990	0.0320	0.4880	77.5	n/a	0.060
Dimensions Listed in Certificate of Compliance				0.5630 (min.)	0.4990 (max.)		0.4880 (max.)	77.5 (max.)	n/a	0.060 (max.)

† Although the calculations were performed for 3.0%, the enrichment is limited in the Certificate of Compliance to 2.7%.

Table 6.2.*44*~~38~~
MAXIMUM K_{EFF} VALUES FOR THE 7X7A ASSEMBLY CLASS IN THE MPC-68F *and MPC-68FF*

(all dimensions are in inches)

7x7A (3.0% Enrichment†, Boral ^{10}B minimum loading of 0.0067 g/cm^2) 49 fuel rods, 0 water rods, pitch=0.631, Zr clad										
Fuel Assembly Designation	maximum k_{eff}	calculated k_{eff}	standard deviation	cladding OD	cladding ID	cladding thickness	pellet OD	fuel length	water rod thickness	channel thickness
7x7A01	0.797*34*	0.793*02*	0.0008	0.4860	0.420*04*	0.03*3028*	0.4110	~~79~~*80*	n/a	0.060
Dimensions Listed in Certificate of Compliance				0.4860 (min.)	0.420*04* (max.)		0.4110 (max.)	~~79~~*80* (max.)	n/a	0.060 (max.)

† Although the calculations were performed for 3.0%, the enrichment is limited in the Certificate of Compliance to 2.7%.

Table 6.2.*4*~~39~~

MAXIMUM K_{EFF} VALUES FOR THE 8X8A ASSEMBLY CLASS IN THE MPC-68F *and MPC-68FF*

(all dimensions are in inches)

8x8A (3.0% Enrichment†, Boral ^{10}B minimum loading of 0.0067 g/cm^2) *63 or* 64 fuel rods††, 0 water rods, pitch=0.523, Zr clad											
Fuel Assembly Designation	maximum k_{eff}	calculated k_{eff}	standard deviation	*fuel rods*	cladding OD	cladding ID	cladding thickness	pellet OD	fuel length	water rod thickness	channel thickness
8x8A01	0.7685	0.7644	0.0007	*64*	0.4120	0.3620	0.0250	0.3580	110	n/a	0.100
8x8A02	*0.7697*	*0.7656*	*0.0007*	*63*	*0.4120*	*0.3620*	*0.0250*	*0.3580*	*120*	*n/a*	*0.100*
Dimensions Listed in Certificate of Compliance				*63*	0.4120 (min.)	0.3620 (max.)		0.3580 (max.)	~~110~~*120* (max.)	n/a	0.100 (max.)
bounding dimensions (8x8A02)	*0.7697*	*0.7656*	*0.0007*	*63*	*0.4120*	*0.3620*	*0.0250*	*0.3580*	*120*	*n/a*	*0.100*

† Although the calculations were performed for 3.0%, the enrichment is limited in the Certificate of Compliance to 2.7%.

†† *This assembly class was analyzed and qualified for a variation in the number of fuel rods.*

Table 6.2.46

SPECIFICATION OF THE THORIA ROD CANISTER AND THE THORIA RODS

Canister ID	*4.81"*
Canister Wall Thickness	*0.11"*
Separator Assembly Plates Thickness	*0.11"*
Cladding OD	*0.412"*
Cladding ID	*0.362"*
Pellet OD	*0.358"*
Active Length	*110.5"*
Fuel Composition	*1.8% UO_2 and 98.2% ThO_2*
Initial Enrichment	*93.5 wt% ^{235}U for 1.8% of the fuel*
Maximum k_{eff}	*0.1813*
Calculated k_{eff}	*0.1779*
Standard Deviation	*0.0004*

6.3 MODEL SPECIFICATION

6.3.1 Description of Calculational Model

Figures 6.3.1, *6.3.1.a, 6.3.2* and 6.3.3 show representative horizontal cross sections of the *four*~~two~~ types of cells used in the calculations, and Figures 6.3.4 ~~and~~ *through* 6.3.6 illustrate the basket configurations used. *Four* ~~Two~~ different MPC fuel basket designs were evaluated as follows:

- a 24 PWR assembly basket
- *an optimized 24 PWR assembly basket (24E / 24EF)*
- *a 32 PWR assembly basket*
- a 68 BWR assembly basket.

For all four basket designs, the same techniques and the same level of detail are used in the calculational models.

Full three-dimensional calculations were used, assuming the axial configuration shown in Figure 6.3.7. Although the Boral neutron absorber panels are 156 inches in length, which is much longer than the active fuel length (maximum of 150 inches), they are assumed equal to the active fuel length in the calculations. As shown on the Design Drawings in Section 1.5, 12 of the 24 periphery Boral panels on the MPC-24, *and 16 of the 24 periphery Boral panels on the MPC-24E/EF* have reduced width (i.e., 6.25 inches wide as opposed to 7.5 inches). However, as shown in Figure 6.3.4, the calculational models for the MPC-24 conservatively assume all of the periphery Boral panels are 5.0 inches in width. *For the MPC-24E/EF, the calculational models conservatively assume all of the periphery Boral panels to be 6.25 inches in width, as shown in Figure 6.3.4a.*

The off-normal and accident conditions defined in Chapter 2 and considered in Chapter 11 have no adverse effect on the design conditions important to criticality safety (see Subsection 6.4.2.5), and thus from a criticality standpoint, the normal, off-normal, and accident conditions are identical and do not require individual models.

The calculational model explicitly defines the fuel rods and cladding, the guide tubes (or water rods for BWR assemblies), the water-gaps and Boral absorber panels on the stainless steel walls of the storage cells. Under the conditions of storage, when the MPC is dry, the resultant reactivity with the design basis fuel is very low ($k_{eff} < 0.45$*2*). For the flooded condition (loading and unloading), *pure, unborated* water was assumed to be present in the fuel rod pellet-to-clad gaps.

Appendix 6.D provides sample input files for ~~each~~*two* of the ~~two~~ MPC basket designs *(MPC-68 and MPC-24)* in the HI-STORM 100 System.

The water thickness above and below the fuel is intentionally maintained less than or equal to the actual water thickness. This assures that any positive reactivity effect of the steel in the MPC is conservatively included. *Furthermore, the water above and below the fuel is modeled as unborated water, even when borated water is present in the fuel region.*

As indicated in Figures 6.3.1 *through*~~and~~ 6.3.3 and in Tables 6.3.1 and 6.3.2, calculations were made with dimensions assumed to be at their most conservative value with respect to criticality. ~~The determination of the worst case (most conservative) dimensions, presented in this section, is taken directly from the HI-STAR applications (Docket Numbers 72-1008 and 71-9261). Because the MPC designs are common to both systems, the HI-STAR analyses are also applicable to the HI-STORM 100 System.~~ CASMO-3 *and MCNP4a* were~~as~~ used to determine the direction of the manufacturing tolerances, which produced the most adverse effect on criticality. After the directional effect (positive effect with an increase in reactivity; or negative effect with a decrease in reactivity) of the manufacturing tolerances was determined, the criticality analyses were performed using the worst case tolerances in the direction which would increase reactivity.

CASMO-3 was used for one of each of the two principal basket designs, i.e. for the fluxtrap design MPC-24 and for the non-fluxtrap design MPC-68. These effects are shown in Table 6.3.1 which also identifies the approximate magnitude of the tolerances on reactivity. *Generally, the conclusions in Table 6.3.1 are directly applicable to the MPC-24E/EF and the MPC-32. Exceptions are the conclusions for the water temperature and void percentage, which are not directly applicable to the MPC-32 due to the presence of high soluble boron concentrations in this canister. This condition is addressed in Section 6.4.2.1 where the optimum moderation is determined for the MPC-32.*

Additionaly, MCNP4a calculations are performed to evaluate the tolerances of the various basket dimensions of the MPC-68, MPC-24 and MPC-32 in further detail. The various basket dimensions are inter-dependent, and therefore cannot be individually varied (i.e., reduction in one parameter requires a corresponding reduction or increase in another parameter). Thus, it is not possible to determine the reactivity effect of each individual dimensional tolerance separately. However, it is possible to determine the reactivity effect of the dimensional tolerances by evaluating the various possible dimensional combinations. To this end, an evaluation of the various possible dimensional combinations was performed using MCNP4a. Calculated k_{eff} results (which do not include the bias, uncertainties, or calculational statistics), along with the actual dimensions, for a number of dimensional combinations are shown in Table 6.3.2 for the reference PWR and BWR assemblies. ~~In Table 6.3.2, the box I.D. is the inner box dimension and the minimum, nominal, and maximum values correspond to those values permitted by the tolerances in the Design Drawings in Section 1.5. For each of the MPC designs, the reactivity~~

~~effects of the tolerances are very small, generally within one standard deviation. The effect of the box wall thickness tolerance is negligible, being either slightly negative or within one standard deviation of the reference.~~ *Each of the basket dimensions are evaluated for their minimum, nominal and maximum values from the Design Drawings of section 1.5. For PWR MPC designs, the reactivity effect of tolerances with soluble boron present in the water is additionally determined. Due to the close similarity between the MPC-24 and MPC-24E, the basket dimensions are only evaluated for the MPC-24, and the same dimensional assumptions are applied to both MPC designs.*

Based on the MCNP4a and CASMO-3 calculations, the conservative dimensional assumptions listed in Table 6.3.3 were determined. Because the reactivity effect (positive or negative) of the manufacturing tolerances are not assembly dependent, these dimensional assumptions were employed for the criticality analyses.

As demonstrated in this section, design parameters important to criticality safety are: fuel enrichment, the inherent geometry of the fuel basket structure, ~~and~~ the fixed neutron absorbing panels (Boral) *and the soluble boron concentration in the water during loading/unloading operations.* As shown in Chapter 11, none of these parameters are affected during any of the design basis off-normal or accident conditions involving handling, packaging, transfer or storage.

6.3.2 Cask Regional Densities

Composition of the various components of the principal designs of the HI-STORM 100 System are listed in Table 6.3.4.

The HI-STORM 100 System is designed such that the fixed neutron absorber (Boral) will remain effective for a storage period greater than 20 years, and there are no credible means to lose it. A detailed physical description, historical applications, unique characteristics, service experience, and manufacturing quality assurance of Boral are provided in Section 1.2.1.3.1.

The continued efficacy of the Boral is assured by acceptance testing, documented in Section 9.1.5.3, to validate the ^{10}B (poison) concentration in the Boral. To demonstrate that the neutron flux from the irradiated fuel results in a negligible depletion of the poison material over the storage period, an MCNP4a calculation of the number of neutrons absorbed in the ^{10}B was performed. The calculation conservatively assumed a constant neutron source for 50 years equal to the initial source for the design basis fuel, as determined in Section 5.2, and shows that the fraction of ^{10}B atoms destroyed is only 2.6E-09 in 50 years. Thus, the reduction in ^{10}B concentration in the Boral by neutron absorption is negligible. In addition, analysis in Appendix 3.M.1 demonstrates that the sheathing, which affixes the Boral panel, remains in place during all credible accident conditions, and thus, the Boral panel remains permanently fixed. Therefore, in

accordance with *10CFR72.124(b)*~~NUREG-1536~~, there is no need to provide a surveillance or monitoring program to verify the continued efficacy of the neutron absorber~~, as required by 10CFR72.124(b)~~.

Table 6.3.1

CASMO-3 CALCULATIONS FOR EFFECT OF TOLERANCES AND TEMPERATURE

Change in Nominal Parameter†	Δk for Maximum Tolerance		Action/Modeling Assumption
	MPC-24	MPC-68	
Reduce Boral Width to Minimum††	+0.0003 min.= 7.4375" nom.= 7.500"	N/A††† min. = nom. = 4.75"	Assume minimum Boral width
Increase UO_2 Density to Maximum	+0.0012 max. = 10.522 g/cc nom. = 10.412 g/cc	+0.0014 max. = 10.522 g/cc nom. = 10.412 g/cc	Assume maximum UO_2 density
Reduce Box Inside Dimension (I.D.) to Minimum	-0.0016 min.= 8.69" nom. = 8.75"	See Table 6.3.2	Assume maximum box I.D. for the MPC-24
Increase Box Inside Dimension (I.D.) to Maximum	+0.0014 max. = 8.81" nom. = 8.75"	-0.0030 max. = 6.113" nom. = 6.053"	Assume minimum box I.D. for the MPC-68
Decrease Water Gap to Minimum	+0.0058 min. = 1.09" nom. = 1.15"	N/A	Assume minimum water gap in the MPC-24

~~Note: From HI-STAR calculations in Docket Numbers 72-1008 and 71-9261 for identical MPC designs.~~

† Reduction (or increase) in a parameter indicates that the parameter is changed to its minimum (or maximum) value.

†† Although the most prevalent Boral width for the MPC-24 is 7.50" +0.125, -0", the analyses conservatively assumed the Boral width to be 7.4375". Further, the analyses conservatively assumed the periphery Boral width to be 5.0".

††† The Boral width for the MPC-68 is 4.75" +0.125", -0" (i.e., the nominal and minimum values are the same).

Table 6.3.1 (continued)

CASMO-3 CALCULATIONS FOR EFFECT OF TOLERANCES AND TEMPERATURE

Change in Nominal Parameter	Δk Maximum Tolerance		Action/Modeling Assumption
	MPC-24	MPC-68	
Increase in Temperature			Assume 20°C
20°C	Ref.	Ref.	
40°C	-0.0031	-0.0039	
70°C	-0.0093	-0.0136	
100°C	-0.0170	-0.0193	
10% Void in Moderator			Assume no void
20°C with no void	Ref.	Ref.	
20°C	-0.0271	-0.0241	
100°C	-0.0439	-0.0432	
Removal of Flow Channel (BWR)	N/A	-0.0073	Assume flow channel present for MPC-68

~~Note: From HI-STAR calculations in Docket Numbers 72-1008 and 71-9261 for identical MPC designs.~~

Table 6.3.2

MCNP4a EVALUATION OF BASKET MANUFACTURING TOLERANCES†

Pitch		Box I.D.		Box Wall Thickness		MCNP4a Calculated k_{eff}
MPC-24†† (17x17A01 @ 4.0% Enrichment)						
nominal	(10.777")	maximum	(8.81")	nominal	(5/16")	0.9400±0.0011†††
minimum	(10.717")	nominal	(8.75")	nominal	(5/16")	0.9365±0.0009
nominal	(10.777")	nom. - 0.05"	(8.70")	nom. + 0.05"	(0.3625")	0.9395±0.0008
MPC-68 (8x8C04 @ 4.2% Enrichment)						
minimum	(6.43")	minimum	(5.993")	nominal	(1/4")	0.9307±0.0007
nominal	(6.49")	nominal	(6.053")	nominal	(1/4")	0.9274±0.0007
maximum	(6.55")	maximum	(6.113")	nominal	(1/4")	0.9272±0.0008
nom. + 0.05"	(6.54")	nominal	(6.053")	nom. + 0.05"	(0.30")	0.9267±0.0007

Notes:

1. Values in parentheses are the actual value used.

~~2. From HI-STAR calculations in Docket Numbers 72-1008 and 71-9261 for identical MPC designs.~~

† Tolerance for pitch and box I.D. are ± 0.06".
Tolerance for box wall thickness is +0.05", -0.00".

†† All calculations for the MPC-24 assume minimum water gap thickness (1.09").

††† Numbers are 1σ statistical uncertainties.

Table 6.3.2 (cont.)

MCNP4a EVALUATION OF BASKET MANUFACTURING TOLERANCES†

Pitch		***Box I.D.***		***Box Wall Thickness***		***MCNP4a Calculated k_{eff}***
MPC-24 (17x17A @ 5.0% Enrichment) 400ppm soluble boron						
nominal	*(10.777")*	*maximum*	*(8.81")*	*nominal*	*(5/16")*	*0.9300±0.0006††*
maximum	*(10.837")*	*maximum*	*(8.81")*	*nominal*	*(5/16")*	*0.9236±0.0006*
minimum	*(10.717")*	*nominal*	*(8.75")*	*nominal*	*(5/16")*	*0.9294±0.0007*
minimum	*(10.717")*	*minimum*	*(8.69")*	*nominal*	*(5/16")*	*0.9223±0.0007*
nominal	*(10.777")*	*nominal-0.05"*	*(8.70")*	*nom.+0.05"*	*(0.3625")*	*0.9285±0.0006*
nominal	*(10.777")*	*nominal*	*(8.75")*	*nominal*	*(5/16")*	*0.9232±0.0006*
MPC-32 (17x17A @ 5.0% Enrichment) 2600 ppm soluble boron						
minimum	*(9.158")*	*minimum*	*(8.69")*	*nominal*	*(9/32")*	*0.9085±0.0007*
nominal	*(9.218")*	*nominal*	*(8.75")*	*nominal*	*(9/32")*	*0.9028±0.0007*
maximum	*(9.278")*	*maximum*	*(8.81")*	*nominal*	*(9/32")*	*0.8996±0.0008*
nominal+0.05"	*(9.268")*	*nominal*	*(8.75")*	*nominal+0.05"*	*(0.331")*	*0.9023±0.0008*
minimum+0.05"	*(9.208")*	*minimum*	*(8.69")*	*nominal+0.05"*	*(0.331")*	*0.9065±0.0007*
maximum	*(9.278")*	*Maximum-0.05"*	*(8.76")*	*nominal+0.05"*	*(0.331")*	*0.9030±0.0008*

Notes:

1. *Values in parentheses are the actual value used.*

† Tolerance for pitch and box I.D. are ± 0.06".
Tolerance for box wall thickness is +0.05", -0.00".

†† *Numbers are 1σ statistical uncertainties.*

Table 6.3.3

BASKET DIMENSIONAL ASSUMPTIONS

Basket Type	Pitch	Box I.D.	Box Wall Thickness	Water-Gap Flux Trap
MPC-24	nominal (10.777")	maximum (8.81")	nominal (5/16")	minimum (1.09")
MPC-24E	*nominal (10.847")*	*maximum (8.81", 9.11" for DFC Positions)*	*nominal (5/16")*	*minimum (1.076", 0.776" for DFC Positions)*
MPC-32	*Minimum (9.158")*	*Minimum (8.69")*	*Nominal (9/32")*	*N/A*
MPC-68	minimum (6.43")	Minimum (5.993")	nominal (1/4")	N/A

Table 6.3.4

COMPOSITION OF THE MAJOR COMPONENTS OF THE HI-STORM 100 SYSTEM

MPC-24, *MPC-24E and MPC-32*		
UO_2 5.0% ENRICHMENT, DENSITY (g/cc) = 10.522		
Nuclide	***Atom-Density***	***Wgt. Fraction***
8016	*4.696E-02*	*1.185E-01*
92235	*1.188E-03*	*4.408E-02*
92238	*2.229E-02*	*8.374E-01*
UO_2 4.0% ENRICHMENT, DENSITY (g/cc) = 10.522		
Nuclide	**Atom-Density**	**Wgt. Fraction**
8016	4.693E-02	1.185E-01
92235	9.505E-04	3.526E-02
92238	2.252E-02	8.462E-01
BORAL (0.02 g ^{10}B/cm sq), DENSITY (g/cc) = 2.660 *(MPC-24)*		
Nuclide	**Atom-Density**	**Wgt. Fraction**
5010	8.707E-03	5.443E-02
5011	3.512E-02	2.414E-01
6012	1.095E-02	8.210E-02
13027	3.694E-02	6.222E-01
BORAL (0.0279 g ^{10}B/cm sq), DENSITY (g/cc) = 2.660 (MPC-24E and MPC-32)		
Nuclide	***Atom-Density***	***Wgt. Fraction***
5010	*8.071E-03*	*5.089E-02*
5011	*3.255E-02*	*2.257E-01*
6012	*1.015E-02*	*7.675E-02*
13027	*3.805E-02*	*6.467E-01*

Table 6.3.4 (continued)

COMPOSITION OF THE MAJOR COMPONENTS OF THE HI-STORM 100 SYSTEM

BORATED WATER, 300 PPM, DENSITY (g/cc)=1.00		
Nuclide	***Atom-Density***	***Wt. Fraction***
5010	*3.248E-06*	*5.400E-05*
5011	*1.346E-05*	*2.460E-04*
1001	*6.684E-02*	*1.1186E-01*
8016	*3.342E-02*	*8.8784E-01*
BORATED WATER, 400PPM, DENSITY (g/cc)=1.00		
Nuclide	***Atom-Density***	***Wgt. Fraction***
5010	*4.330E-06*	*7.200E-05*
5011	*1.794E-05*	*3.280E-04*
1001	*6.683E-02*	*1.1185E-01*
8016	*3.341E-02*	*8.8775E-01*
BORATED WATER, 1900PPM, DENSITY (g/cc)=1.00		
Nuclide	*Atom-Density*	***Wgt. Fraction***
5010	*2.057E-05*	*3.420E-04*
5011	*8.522E-05*	*1.558E-03*
1001	*6.673E-02*	*1.1169E-01*
8016	*3.336E-02*	*8.8641E-01*
BORATED WATER, 2600PPM, DENSITY (g/cc)=0.93		
Nuclide	*Atom-Density*	***Wgt. Fraction***
5010	*2.618e-05*	*4.680E-04*
5011	*1.085e-04*	*2.132E-03*
1001	*6.201e-02*	*1.1161E-01*
8016	*3.101e-02*	*8.8579E-01*

Table 6.3.4 (continued)

COMPOSITION OF THE MAJOR COMPONENTS OF THE HI-STORM 100 SYSTEM

MPC-68		
UO_2 4.2% ENRICHMENT, DENSITY (g/cc) = 10.522		
Nuclide	**Atom-Density**	**Wgt. Fraction**
8016	4.697E-02	1.185E-01
92235	9.983E-04	3.702E-02
92238	2.248E-02	8.445E-01
UO_2 3.0% ENRICHMENT, DENSITY (g/cc) = 10.522		
Nuclide	**Atom-Density**	**Wgt. Fraction**
8016	4.695E-02	1.185E-01
92235	7.127E-04	2.644E-02
92238	2.276E-02	8.550E-01
MOX FUEL†, DENSITY (g/cc) = 10.522		
Nuclide	**Atom-Density**	**Wgt. Fraction**
8016	4.714E-02	1.190E-01
92235	1.*719*~~659~~E-04	6.*380*~~150~~E-03
92238	2.285E-02	8.58*46*E-01
94239	3.876E-04	1.461E-02
94240	9.177E-06	3.400E-04
94241	3.247E-05	1.240E-03
94242	2.118E-06	7.000E-05

† The Pu-238, which is an absorber, was conservatively neglected in the MOX description for analysis purposes.

Table 6.3.4 (continued)
COMPOSITION OF THE MAJOR COMPONENTS OF THE HI-STORM 100 SYSTEM

BORAL (0.0279 g ^{10}B/cm sq), DENSITY (g/cc) = 2.660		
Nuclide	**Atom-Density**	**Wgt. Fraction**
5010	8.071E-03	5.089E-02
5011	3.255E-02	2.257E-01
6012	1.015E-02	7.675E-02
13027	3.805E-02	6.467E-01
FUEL IN THORIA RODS, DENSITY (g/cc) = 10.522		
Nuclide	***Atom-Density***	***Wgt. Fraction***
5010	*4.798E-02*	*1.212E-01*
5011	*4.001E-04*	*1.484E-02*
6012	*2.742E-05*	*1.030E-03*
13027	*2.357E-02*	*8.630E-01*
COMMON MATERIALS		
ZR CLAD, DENSITY (g/cc) = 6.550		
Nuclide	**Atom-Density**	**Wgt. Fraction**
40000	4.323E-02	1.000E+00
MODERATOR (H_2O), DENSITY (g/cc) = 1.000		
Nuclide	**Atom-Density**	**Wgt. Fraction**
1001	6.688E-02	1.119E-01
8016	3.344E-02	8.881E-01

Table 6.3.4 (continued)
COMPOSITION OF THE MAJOR COMPONENTS OF THE HI-STORM 100 SYSTEM

STAINLESS STEEL, DENSITY (g/cc) = 7.840		
Nuclide	**Atom-Density**	**Wgt. Fraction**
24000	1.761E-02	1.894E-01
25055	1.761E-03	2.001E-02
26000	5.977E-02	6.905E-01
28000	8.239E-03	1.000E-01
ALUMINUM, DENSITY (g/cc) = 2.700		
Nuclide	**Atom-Density**	**Wgt. Fraction**
13027	6.026E-02	1.000E+00

Table 6.3.4 (continued)

COMPOSITION OF THE MAJOR COMPONENTS OF THE HI-STORM 100 SYSTEM

CONCRETE, DENSITY (g/cc) = 2.35		
Nuclide	**Atom-Density**	**Wgt. Fraction**
1001	8.806E-03	6.000E-03
8016	4.623E-02	5.000E-01
11000	1.094E-03	1.700E-02
13027	2.629E-04	4.800E-03
14000	1.659E-02	3.150E-01
19000	7.184E-04	1.900E-02
20000	3.063E-03	8.300E-02
26000	3.176E-04	1.200E-02
LEAD, DENSITY (g/cc) = 11.34		
Nuclide	**Atom-Density**	**Wgt. Fraction**
82000	3.296E-02	1.0
HOLTITE-A, DENSITY (g/cc) = 1.61		
1001	5.695E-02	5.920E-02
5010	1.365E-04	1.410E-03
5011	5.654E-04	6.420E-03
6012	2.233E-02	2.766E-01
7014	1.370E-03	1.980E-02
8016	2.568E-02	4.237E-01
13027	7.648E-03	2.129E-01

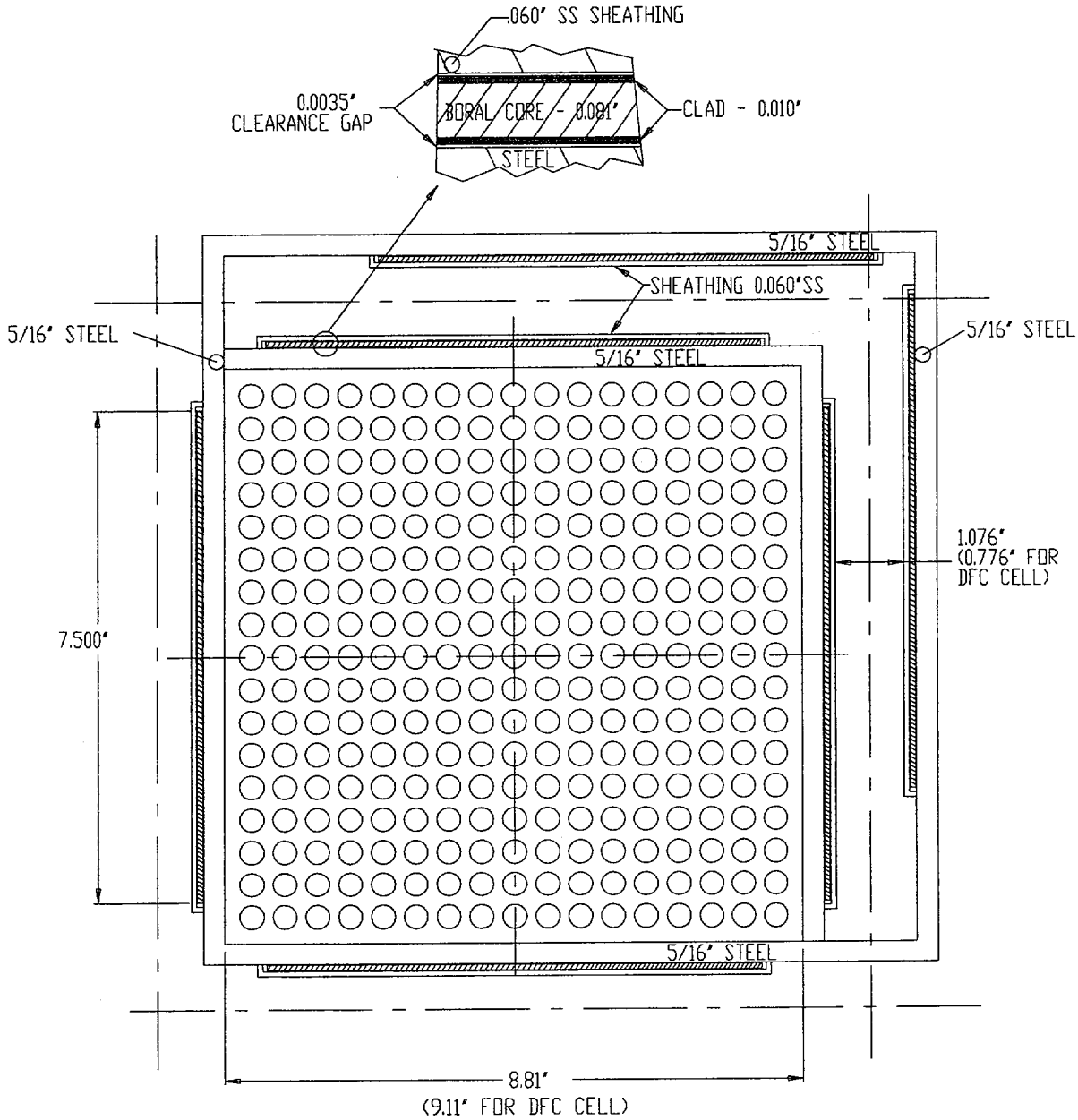

FIGURE 6.3.1A; TYPICAL CELL IN THE CALCULATION MODEL (PLANAR CROSS-SECTION) WITH REPRESENTATIVE FUEL IN THE MPC-24E BASKET

(SEE CHAPTER 1 FOR TRUE BASKET DIMENSIONS)

NOTE: THESE DIMENSIONS WERE CONSERVATIVELY USED FOR CRITICALITY ANALYSES.

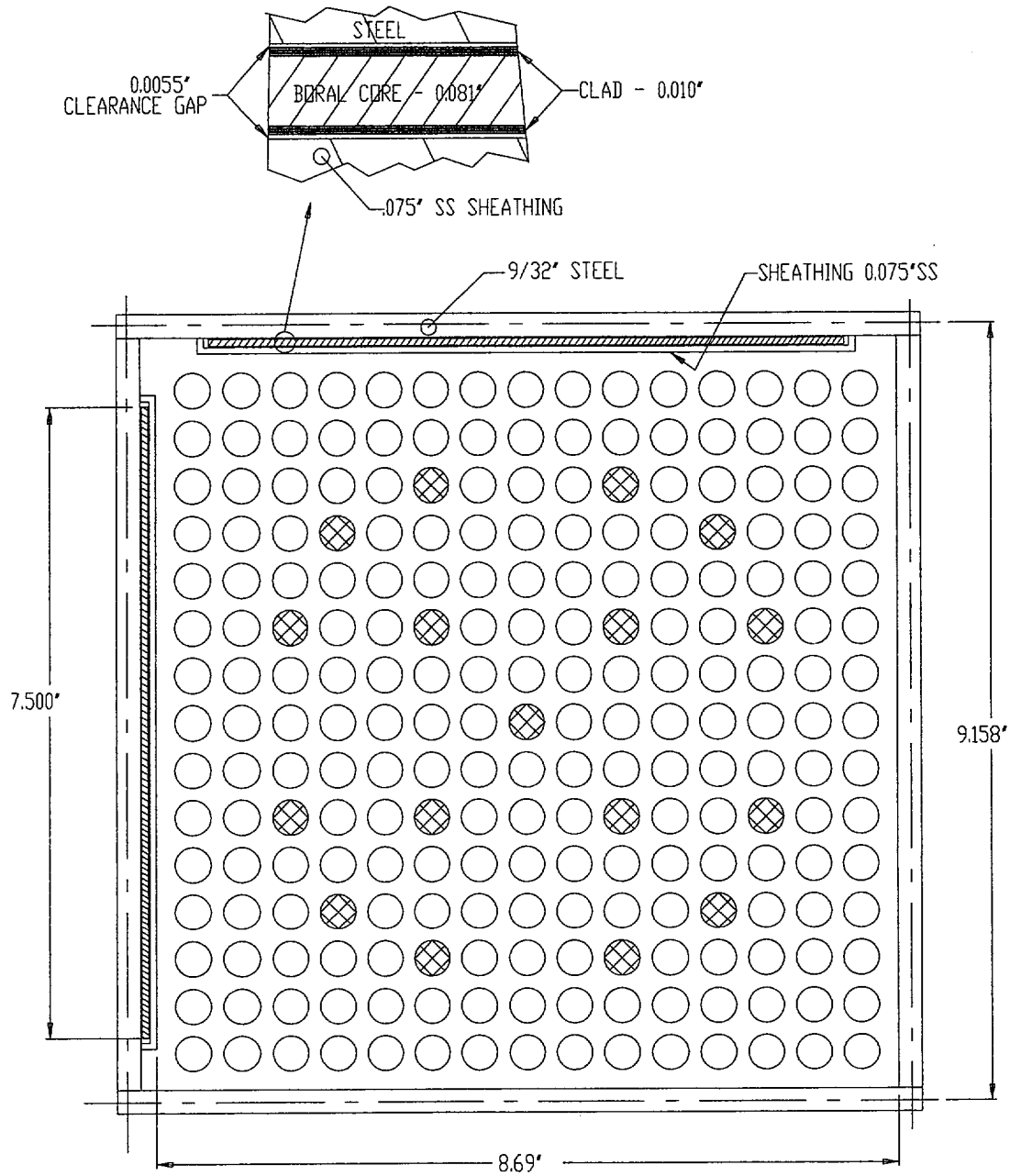

FIGURE 6.3.2; TYPICAL CELL IN THE CALCULATION MODEL (PLANAR CROSS-SECTION) WITH REPRESENTATIVE FUEL IN THE MPC-32 BASKET

(SEE CHAPTER 1 FOR TRUE BASKET DIMENSIONS)

NOTE: THESE DIMENSIONS WERE CONSERVATIVELY USED FOR CRITICALITY ANALYSES.

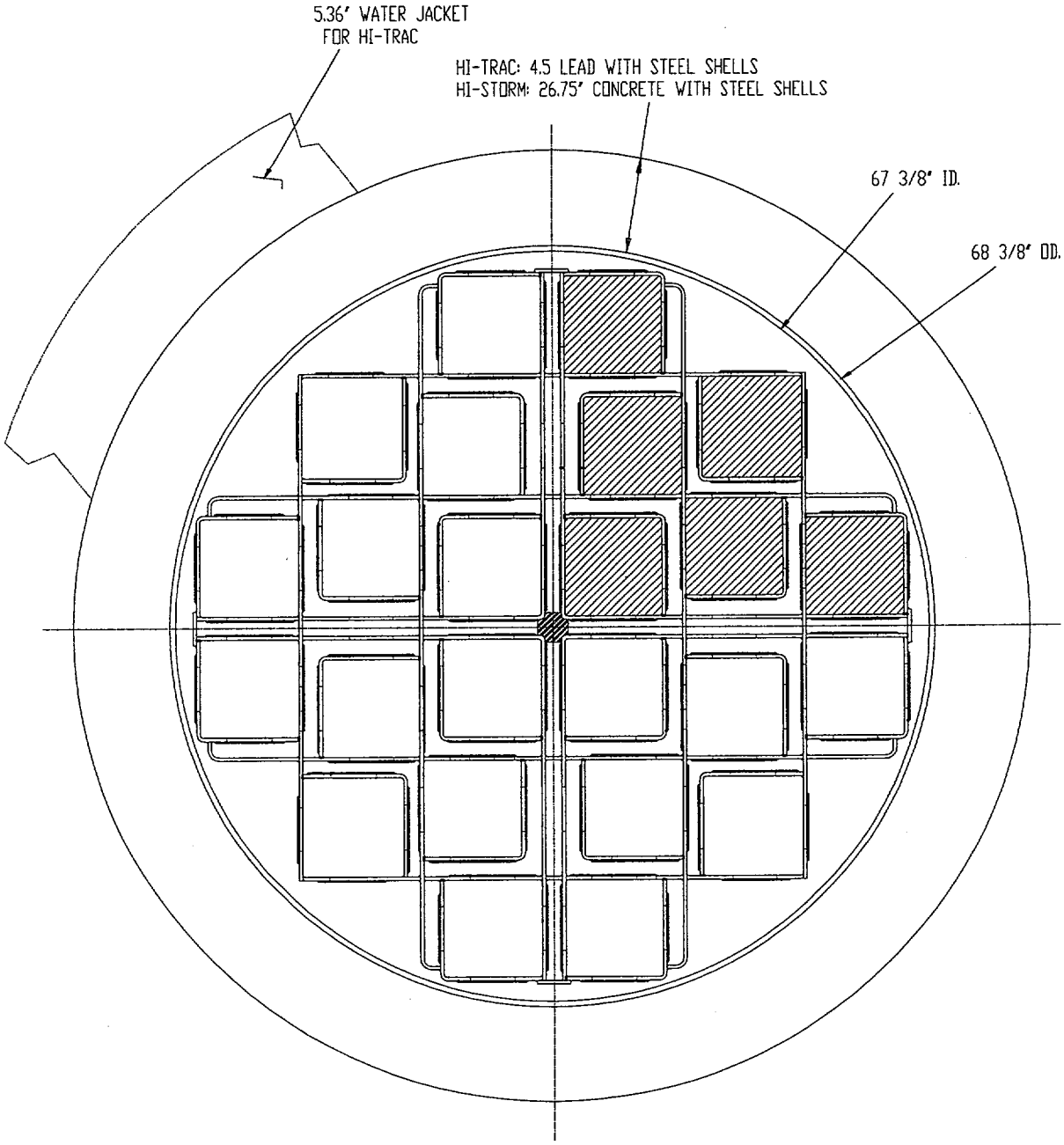

FIGURE 6.3.4A; CALCULATION MODEL (PLANAR CROSS-SECTION) WITH FUEL ILLUSTRATED IN ONE QUADRANT OF THE MPC-24E.

(SEE CHAPTER 1 FOR TRUE BASKET DIMENSIONS)

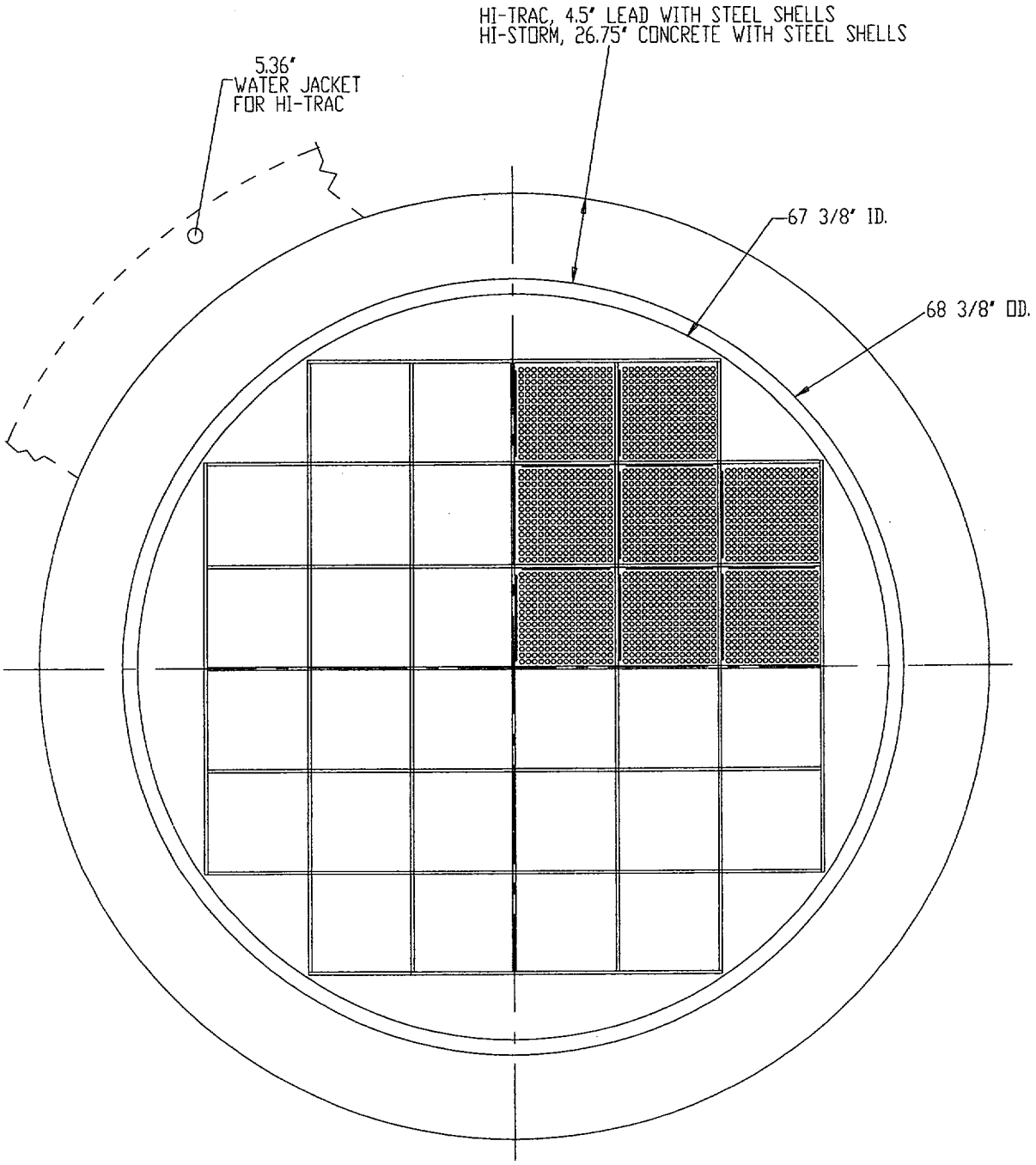

FIGURE 6.3.5; CALCULATION MODEL (PLANAR CROSS-SECTION) WITH FUEL AND BORAL ILLUSTRATED IN ONE QUADRANT OF THE MPC-32.

(SEE CHAPTER 1 FOR TRUE BASKET DIMENSIONS)

	ACTIVE FUEL LENGTH	LOWER WATER THICKNESS	UPPER WATER THICKNESS
MPC-68	SEE TABLE 6.2.1	7.30 IN.	8.46 IN.
MPC-24,-24E & -32	SEE TABLE 6.2.2	4.0 IN.	6.0 IN.

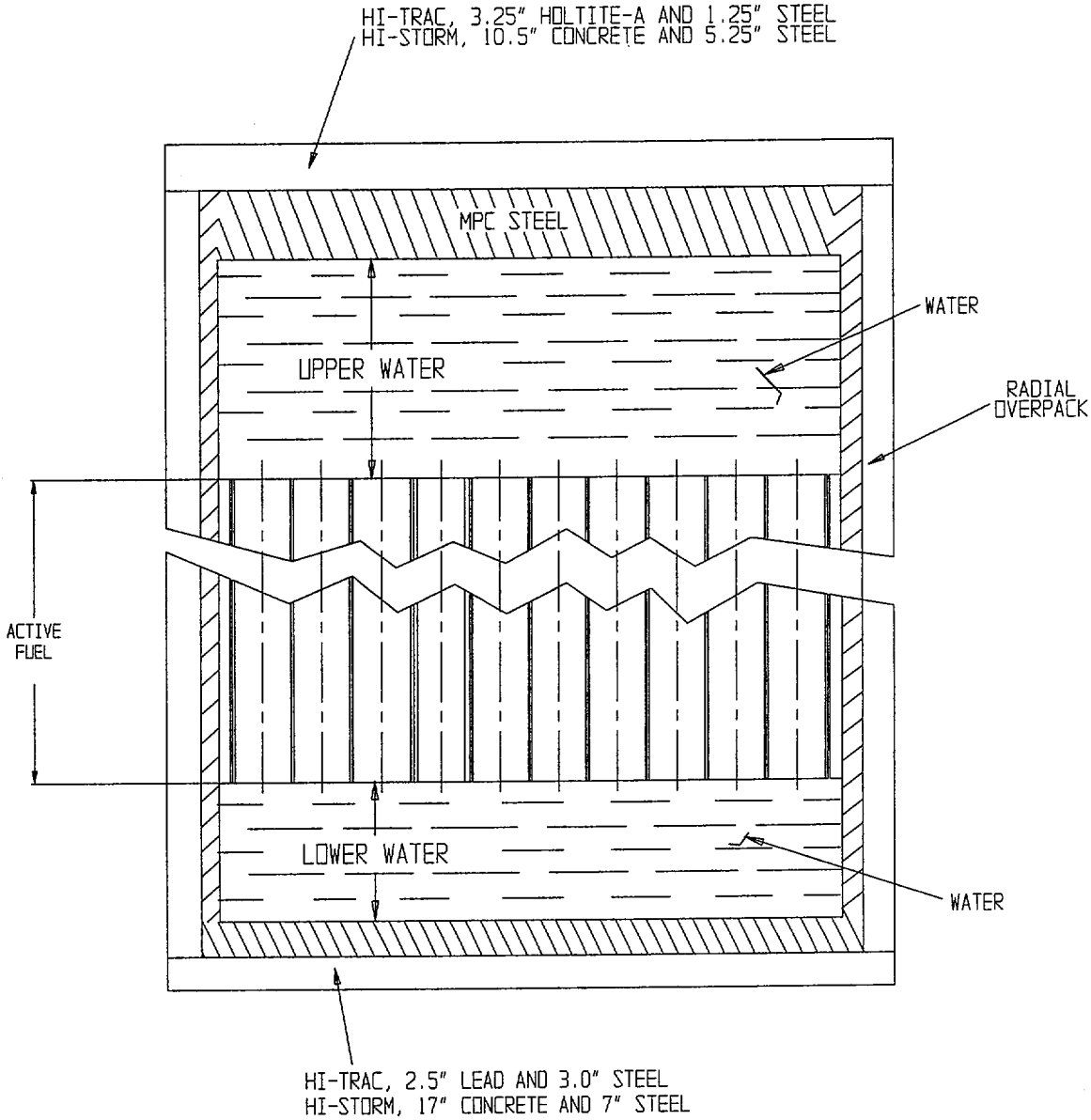

FIGURE 6.3.7; SKETCH OF THE CALCULATIONAL MODEL IN THE AXIAL DIRECTION

6.4 CRITICALITY CALCULATIONS

6.4.1 Calculational or Experimental Method

6.4.1.1 Basic Criticality Safety Calculations

The principal method for the criticality analysis is the general three-dimensional continuous energy Monte Carlo N-Particle code MCNP4a [6.1.4] developed at the Los Alamos National Laboratory. MCNP4a was selected because it has been extensively used and verified and has all of the necessary features for this analysis. MCNP4a calculations used continuous energy cross-section data based on ENDF/B-V, as distributed with the code [6.1.4]. Independent verification calculations were performed with NITAWL-KENO5a [6.1.5], which is a three-dimensional multigroup Monte Carlo code developed at the Oak Ridge National Laboratory. The KENO5a calculations used the 238-group cross-section library, which is based on ENDF/B-V data and is distributed as part of the SCALE-4.3 package [6.4.1], in association with the NITAWL-II program [6.1.6], which adjusts the uranium-238 cross sections to compensate for resonance self-shielding effects. The Dancoff factors required by NITAWL-II were calculated with the CELLDAN code [6.1.13], which includes the SUPERDAN code [6.1.7] as a subroutine.

The convergence of a Monte Carlo criticality problem is sensitive to the following parameters: (1) number of histories per cycle, (2) the number of cycles skipped before averaging, (3) the total number of cycles and (4) the initial source distribution. The MCNP4a criticality output contains a great deal of useful information that may be used to determine the acceptability of the problem convergence. This information was used in parametric studies to develop appropriate values for the aforementioned criticality parameters to be used in the criticality calculations for this submittal. Based on these studies, a minimum of 5,000 histories were simulated per cycle, a minimum of 20 cycles were skipped before averaging, a minimum of 100 cycles were accumulated, and the initial source was specified as uniform over the fueled regions (assemblies). Further, the output was examined to ensure that each calculation achieved acceptable convergence. These parameters represent an acceptable compromise between calculational precision and computational time. Appendix 6.D provides sample input files for ~~each of~~ the MPC-*24 and MPC-68* baskets in the HI-STORM 100 System.

CASMO-3 [6.1.9] was used for determining the small incremental reactivity effects of manufacturing tolerances. Although CASMO-3 has been extensively benchmarked, these calculations are used only to establish direction of reactivity uncertainties due to manufacturing tolerances (and their magnitude). This allows the MCNP4a calculational model to use the worst combination of manufacturing tolerances. Table 6.3.1 shows results of the CASMO-3 calculations~~, taken directly from the HI-STAR applications (Docket Numbers 72-1008 and 71-9261) which utilize identical MPC designs~~.

6.4.2 Fuel Loading or Other Contents Loading Optimization

The basket designs are intended to safely accommodate fuel with enrichments indicated in Tables 6.1.1 *through 6.1.8* ~~and 6.1.2~~. These calculations were based on the assumption that the HI-STORM 100 System (HI-TRAC transfer cask) was fully flooded with clean unborated water *or water containing specific minimum soluble boron concentrations*. In all cases, the calculations include bias and calculational uncertainties, as well as the reactivity effects of manufacturing tolerances, determined by assuming the worst case geometry.

Nominally, the fuel assemblies would be centrally positioned in each MPC basket cell. However, in accordance with NUREG-1536, the consequence of eccentric positioning was also evaluated and found to be negligible. To simulate eccentric positioning (and possible closer approach to the MPC steel shield), calculations were performed analytically decreasing the inner radius until it was 1 cm away† from the nearest fuel. Results showed a minor increase in reactivity of 0.0026 Δk maximum (MPC-68) which implies that the effect of eccentric location of fuel is negligible at the actual reflector spacing.

6.4.2.1 Internal and External Moderation

As required by NUREG-1536, calculations in this section demonstrate that the HI-STORM 100 System remains subcritical for all credible conditions of moderation. ~~The analyses are taken directly from the HI-STAR applications (USNRC Docket Numbers 72-1008 and 71-9261). Because the MPC designs are identical and the overpack material does not significantly effect the reactivity (see Tables 6.1.1 through 6.1.3), these analyses are applicable to the HI-TRAC transfer cask and the HI-STORM storage overpack.~~

6.4.2.1.1 Unborated Water

With a neutron absorber present (i.e., the Boral sheets or the steel walls of the storage compartments), the phenomenon of a peak in reactivity at a hypothetical low moderator density (sometimes called "optimum" moderation) does not occur to any significant extent. In a definitive study, Cano, et al. [6.4.2] has demonstrated that the phenomenon of a peak in reactivity at low moderator densities does not occur in the presence of strong neutron absorbing material or in the absence of large water spaces between fuel assemblies in storage. Nevertheless, calculations for a single reflected cask were made to confirm that the phenomenon does not occur

† PNL critical experiments have shown a small positive reactivity effect of thick steel reflectors, with the maximum effect at 1 cm distance from the fuel. In the cask designs, the fuel is mechanically prohibited from being positioned at a 1 cm spacing from the overpack steel.

with low density water inside or outside the casks.

Calculations for the MPC designs with internal and external moderators of various densities are shown in Table 6.4.1. For comparison purposes, a calculation for a single unreflected cask (Case 1) is also included in Table 6.4.1. At 100% external moderator density, Case 2 corresponds to a single fully-flooded cask, fully reflected by water. Figure 6.4.10 plots calculated k_{eff} values ($\pm 2\sigma$) as a function of internal moderator density for both MPC designs with 100% external moderator density (i.e., full water reflection). Results listed in Table 6.4.1 support the following conclusions:

- For each type of MPC, the calculated k_{eff} for a fully-flooded cask is independent of the external moderator (the small variations in the listed values are due to statistical uncertainties which are inherent to the calculational method (Monte Carlo)), and

- For each type of MPC, reducing the internal moderation results in a monotonic reduction in reactivity, with no evidence of any optimum moderation. Thus, the fully flooded condition corresponds to the highest reactivity, and the phenomenon of optimum low-density moderation does not occur and is not applicable to the HI-STORM 100 System.

For each of the MPC designs, the maximum k_{eff} values are shown to be less than or statistically equal to that of a single internally flooded unreflected cask and are below the regulatory limit of 0.95.

6.4.2.1.2 *Borated Water*

With the presence of a soluble neutron absorber in the water, the discussion in the previous section is not always applicable. Calculations were made to determine the optimum moderator density for the MPC designs that require a minimum soluble boron concentration.

Calculations for the MPC designs with various internal moderator densities are shown in Table 6.4.6. As shown in the previous section, the external moderator density has a negligible effect on the reactivity, and is therefore not varied. Water containing soluble boron has a slightly higher density than pure water. Therefore, water densities up to 1.005 g/cm^3 were analyzed for the higher soluble boron concentrations. Additionally, for the higher soluble boron concentrations, analysis have been performed with empty (voided) guide tubes. This variation is discussed in detail in Section 6.4.8. Results listed in the Table 6.4.6 support the following conclusions:

- *For all cases with a soluble boron concentration of up to 1900ppm, and for a soluble boron concentration of 2600ppm assuming voided guide tubes, the conclusion of the Section 6.4.2.1.1 applies, i.e. the maximum reactivity is corresponds to 100% moderator density.*

- *For 2600ppm soluble boron concentration with filled guide tubes, the results presented in Table 6.4.6 indicate that there is a maximum of the reactivity somewhere between 0.90 g/cm^3 and 1.00 g/cm^3 moderator density. However, a distinct maximum can not be identified, as the reactivities in this range are very close. For the purpose of the calculations with 2600ppm soluble boron concentration, a moderator density of 0.93 g/cm^3 was chosen, which corresponds to the highest calculated reactivity listed in Table 6.4.6.*

6.4.2.2 Partial Flooding

As required by NUREG-1536, calculations in this section address partial flooding in the HI-STORM 100 System and demonstrate that the fully flooded condition is the most reactive.

The reactivity changes during the flooding process were evaluated in both the vertical and horizontal positions for all MPC designs. For these calculations, the cask is partially filled (at various levels) with full density (1.0 g/cc) water and the remainder of the cask is filled with steam consisting of ordinary water at partial density (0.002 g/cc), as suggested in NUREG-1536. Results of these calculations are shown in Table 6.4.2. In all cases, the reactivity increases monotonically as the water level rises, confirming that the most reactive condition is fully flooded.

6.4.2.3 Clad Gap Flooding

As required by NUREG-1536, the reactivity effect of flooding the fuel rod pellet-to-clad gap regions, in the fully flooded condition, has been investigated. Table 6.4.3 presents maximum k_{eff} values that demonstrate the positive reactivity effect associated with flooding the pellet-to-clad gap regions. These results confirm that it is conservative to assume that the pellet-to-clad gap regions are flooded. For all cases that involve flooding, the pellet-to-clad gap regions are assumed to be flooded *with clean, unborated water.*

6.4.2.4 Preferential Flooding

~~Preferential or uneven flooding within the HI-STORM 100 System was not evaluated because such a condition is not credible for any of the MPC basket designs loaded in the HI-STORM 100 System.~~ *Two different potential conditions of preferential flooding are considered: preferential flooding of the MPC basket itself (i.e. different water levels in different basket cells), and preferential flooding involving Damaged Fuel Containers.*

Preferential flooding of *the MPC basket itself for* any of the MPC fuel basket designs is not possible because flow holes are present on all four walls of each basket cell and on the two flux trap walls at both the top and bottom of the MPC basket. The flow holes are sized to ensure that they cannot be blocked by crud deposits (see Chapter 11). Because the fuel cladding temperatures remain below their design limits (as demonstrated in Chapter 4) and the inertial loading remains below 63g's (the inertial loadings associated with the design basis drop accidents discussed in Chapter 11 are limited to 45g's), the cladding remains intact (see Section 3.5). For damaged ~~BWR~~ fuel assemblies and ~~BWR~~ fuel debris, the assemblies or debris are pre-loaded into stainless steel Damaged Fuel Containers fitted with 250*x250*~~micron~~ fine mesh screens which prevent damaged fuel assemblies or fuel debris from blocking the basket flow holes. Therefore, the flow holes cannot be blocked.

However, when DFCs are present in the MPC, a condition could exist during the draining of the MPC, where the DFCs are still partly filled with water while the remainder of the MPC is dry. This condition would be the result of the water tension across the mesh screens. The maximum water level inside the DFCs for this condition is calculated from the dimensions of the mesh screen and the surface tension of water. The wetted perimeter of the screen openings is 50 ft per square inch of screen. With a surface tension of water of 0.005 lbf/ft, this results in a maximum pressure across the screen of 0.25 psi, corresponding to a maximum water height in the DFC of 7 inches. For added conservativism, a value of 12 inches is used. Assuming this condition, calculations are performed for all three possible DFC configurations:

- *MPC-68 or MPC-68F with 68 DFCs (Assembly Classes 6x6A/B/C, 7x7A and 8x8A)*
- *MPC-68 or MPC-68FF with 16 DFCs (All BWR Assembly Classes)*
- *MPC-24E or MPC-24EF with 4 DFCs (All PWR Assembly Classes)*

For each configuration, the case resulting in the highest maximum k_{eff} for the fully flooded condition (see Section 6.4.4) is re-analyzed assuming the preferential flooding condition. For these analyses, the lower 12 inches of the active fuel in the DFCs and the water region below the active fuel (see Figure 6.3.7) are filled with full density water (1.0 g/cc). The remainder of the cask is filled with steam consisting of ordinary water at partial density (0.002 g/cc). Table 6.4.4 lists the maximum k_{eff} for the three configurations in comparison with the maximum k_{eff} for the fully flooded condition. For all configurations, the preferential flooding condition results in a lower maximum k_{eff} than the fully flooded condition. Thus, the preferential flooding condition is bounded by the fully flooded condition.

Once established, the integrity of the MPC confinement boundary is maintained during all credible off-normal and accident conditions, and thus, the MPC cannot be flooded. ~~Therefore~~*In summary*, it is concluded that the MPC fuel baskets cannot be preferentially flooded, *and that the potential preferential flooding conditions involving DFCs are bounded by the result for the fully flooded condition listed in Section 6.4.4.*

6.4.2.5 Design Basis Accidents

The analyses presented in Chapters 3 and 11 demonstrate that the damage resulting from the design basis accidents is limited to a loss of the water jacket for the HI-TRAC transfer cask and minor damage to the concrete radiation shield for the HI-STORM storage cask, which have no adverse effect on the design parameters important to criticality safety.

As reported in Chapter 3, Table 3.4.4, the minimum factor of safety for either MPC as a result of the hypothetical cask drop or tip-over accident is 1.1 against the Level D allowables for Subsection NG, Section III of the ASME Code. Therefore, because the maximum box wall stresses are well within the ASME Level D allowables, the flux-trap gap change will be insignificant compared to the characteristic dimension of the flux trap.

In summary, the design basis accidents have no adverse effect on the design parameters important to criticality safety, and therefore, there is no increase in reactivity as a result of any of the credible off-normal or accident conditions involving handling, packaging, transfer or storage. Consequently, the HI-STORM 100 System is in full compliance with the requirement of 10CRF72.124, which states that "before a nuclear criticality accident is possible, at least two unlikely, independent, and concurrent or sequential changes have occurred in the conditions essential to nuclear criticality safety."

6.4.3 Criticality Results

Results of the design basis criticality safety calculations for the condition of *full* flooding with ~~clean unborated~~ water (limiting cases) are *presented in section 6.2 and* summarized in Section 6.1. To demonstrate the applicability of the HI-STAR analyses, results of the design basis criticality safety calculations for the HI-STAR cask (limiting cases) are also summarized in Section 6.1 for comparison. These data confirm that for each of the candidate fuel types and basket configurations the effective multiplication factor (k_{eff}), including all biases and uncertainties at a 95-percent confidence level, do not exceed 0.95 under all credible normal, off-normal, and accident conditions.

Additional calculations (CASMO-3) at elevated temperatures confirm that the temperature coefficients of reactivity are negative as shown in Table 6.3.1. This confirms that the calculations for the storage baskets are conservative.

In calculating the maximum reactivity, the analysis used the following equation:

$$k_{eff}^{max} = k_c + K_c\sigma_c + Bias + \sigma_B$$

where:

- ⇒ k_c is the calculated k_{eff} under the worst combination of tolerances;
- ⇒ K_c is the K multiplier for a one-sided statistical tolerance limit with 95% probability at the 95% confidence level [6.1.8]. Each final k_{eff} value calculated by MCNP4a (or KENO5a) is the result of averaging 100 (or more) cycle k_{eff} values, and thus, is based on a sample size of 100. The K multiplier corresponding to a sample size of 100 is 1.93. However, for this analysis a value of 2.00 was assumed for the K multiplier, which is larger (more conservative) than the value corresponding to a sample size of 100;
- ⇒ σ_c is the standard deviation of the calculated k_{eff}, as determined by the computer code (MCNP4a or KENO5a);
- ⇒ ***Bias*** is the systematic error in the calculations (code dependent) determined by comparison with critical experiments in Appendix 6.A; and
- ⇒ σ_B is the standard error of the bias (which includes the K multiplier for 95% probability at the 95% confidence level; see Appendix 6.A).

The critical experiment benchmarking and the derivation of the bias and standard error of the bias (95% probability at the 95% confidence level~~), which are taken from the HI-STAR applications (Docket Numbers 72-1008 and 71-9261),~~ are presented in Appendix 6.A.

6.4.4 Damaged Fuel ~~Container~~ *and Fuel Debris*

~~The HI-STAR analysis provided in the applications (Docket Numbers 72-1008 and 71-9261) include an evaluation of damaged fuel. This evaluation is also applicable to the HI-TRAC transfer cask and the HI-STORM storage overpack, since the MPC designs are identical.~~

~~Both d~~*D*amaged ~~BWR~~ fuel assemblies and ~~BWR~~ fuel debris are required to be loaded into Damaged Fuel Containers (DFCs) prior to being loaded into the MPC. *Four (4) different DFC types with different cross sections are analyzed. Three (3) of these DFCs are designed for BWR fuel assemblies, one (1) is designed for PWR fuel assemblies. Two of the DFCs for BWR fuel are specifically designed for fuel assembly classes 6x6A, 6x6B, 6x6C, 7x7A and 8x8A. These assemblies have a smaller cross section, a shorter active length and a low initial enrichment of 2.7 wt% ^{235}U, and therefore a low reactivity. The analysis for these assembly classes is presented in the following Section 6.4.4.1. The remaining two DFCs are generic DFCs designed for all BWR and PWR assembly classes. The criticality analysis for these generic DFCs is presented in Section 6.4.4.2.*

6.4.4.1 MPC-68, MPC-68F or MPC-68FF loaded with Assembly Classes 6x6A, 6x6B, 6x6C, 7x7A and 8x8A

This section only addresses criticality calculations and results for assembly classes 6x6A, 6x6B,

6x6C, 7x7A and 8x8A, loaded into the MPC-68, MPC-68F or MPC-68FF. Up to 68 DFCs with these assembly classes are permissible to be loaded into the MPC. Two different DFC types with slightly different cross-sections are analyzed. DFCs containing fuel debris must be stored in the MPC-68F *or MPC-68FF.* DFCs containing damaged fuel assemblies may be stored in either the MPC-68, *MPC-68F* or MPC-68F*F*. Evaluation of the capability of storing damaged fuel and fuel debris (loaded in DFCs) is limited to very low reactivity fuel in the MPC-68F. Because the MPC-68 *and MPC-68FF* have~~s~~ a higher specified ^{10}B loading, the evaluation of the MPC-68F conservatively bounds the storage of damaged BWR fuel assemblies in a standard MPC-68 *or MPC-68FF*. Although the maximum planar-average enrichment of the damaged fuel is limited to 2.7% ^{235}U as specified in ~~Chapter 12~~*the Certificate of Compliance*, analyses have been made for three possible scenarios, conservatively assuming fuel[††] of 3.0% enrichment. The scenarios considered included the following:

1. Lost or missing fuel rods, calculated for various numbers of missing rods in order to determine the maximum reactivity. The configurations assumed for analysis are illustrated in Figures 6.4.2 through 6.4.8.
2. Broken fuel assembly with the upper segments falling into the lower segment creating a close-packed array (described as a 8x8 array). For conservatism, the array analytically retained the same length as the original fuel assemblies in this analysis. This configuration is illustrated in Figure 6.4.9.
3. Fuel pellets lost from the assembly and forming powdered fuel dispersed through a volume equivalent to the height of the original fuel. (Flow channel and clad material assumed to disappear).

Results of the analyses, shown in Table 6.4.5, confirm that, in all cases, the maximum reactivity is well below the regulatory limit. *There is no significant difference in reactivity between the two DFC types.* Collapsed fuel reactivity (simulating fuel debris) is low because of the reduced moderation. Dispersed powdered fuel results in low reactivity because of the increase in ^{238}U neutron capture (higher effective resonance integral for ^{238}U absorption).

The loss of fuel rods results in a small increase in reactivity (i.e., rods assumed to collapse, leaving a smaller number of rods still intact). The peak reactivity occurs for 8 missing rods, and a smaller (or larger) number of intact rods will have a lower reactivity, as indicated in Table 6.4.5.

The analyses performed and summarized in Table 6.4.5 provides the relative magnitude of the effects on the reactivity. This information coupled with the maximum k_{eff} values listed in Table 6.1.3 and the conservatism in the analyses, demonstrate that the maximum k_{eff} of the damaged fuel in the most adverse post-accident condition will remain well below the regulatory requirement of $k_{eff} < 0.95$.

---

†† 6x6A01 and 7x7A01 fuel assemblies were used as representative assemblies.

6.4.4.2 Generic BWR and PWR Damaged Fuel and Fuel Debris

The MPC-24E, MPC-24EF, MPC-68 and MPC-68FF are designed to contain PWR and BWR damaged fuel and fuel debris, loaded into generic DFCs. The number of generic DFCs is limited to 16 for the MPC-68 and MPC-68FF, and to 4 for the MPC-24E and MPC-24EF. The permissible locations of the DFCs are shown in Figure 6.4.11 for the MPC-68/68FF and in Figure 6.4.12 for the MPC-24E/24EF.

Damaged fuel assemblies are assemblies with known or suspected cladding defects greater than pinholes or hairlines, or with missing rods, but excluding fuel assemblies with gross defects (for a full definition see Section 1.1 of the Certificate of Compliance). Therefore, apart from possible missing fuel rods, damaged fuel assemblies have the same geometric configuration as intact fuel assemblies and consequently the same reactivity. Missing fuel rods can result in a slight increase of reactivity. After a drop accident, however, it can not be assumed that the initial geometric integrity is still maintained. For a drop on either the top or bottom of the cask, the damaged fuel assemblies could collapse. This would result in a configuration with a reduced length, but increased amount of fuel per unit length. For a side drop, fuel rods could be compacted to one side of the DFC. In either case, a significant relocation of fuel within the DFC is possible, which creates a greater amount of fuel in some areas of the DFC, whereas the amount of fuel in other areas is reduced. Fuel debris can include a large variety of configurations ranging from whole fuel assemblies with severe damage down to individual fuel pellets.

To address all the situations listed above and identify the configuration or configurations leading to the highest reactivity, it is impractical to analyze a large number of different geometrical configurations for each of the fuel classes. Instead, a bounding approach is taken which is based on the analysis of regular arrays of bare fuel rods without cladding. Details and results of the analyses are discussed in the following sections.

All calculations for generic damaged fuel and fuel debris are performed using a full cask model with the maximum permissible number of Damaged Fuel Containers. For the MPC-68 and MPC-68FF, the model therefore contains 52 intact assemblies, and 16 DFCs in the locations shown in Figure 6.4.11. For the MPC-24E and MPC-24EF, the model consists of 20 intact assemblies, and 4 DFCs in the locations shown in Figure 6.4.12. The bounding assumptions regarding the intact assemblies and the modeling of the damaged fuel and fuel debris in the DFCs are discussed in the following sections.

6.4.4.2.1 Bounding Intact Assemblies

Intact BWR assemblies stored together with DFCs are limited to a maximum planar average enrichment of 3.7 wt% ^{235}U, regardless of the fuel class. The results presented in Table 6.1.7 are for different enrichments for each class, ranging between 2.7 and 4.2 wt% ^{235}U, making it

difficult to identify the bounding assembly. Therefore, additional calculations were performed for the bounding assembly in each assembly class with a planar average enrichment of 3.7 wt%. The results are summarized in Table 6.4.7 and demonstrate that the assembly classes 9x9E and 9x9F have the highest reactivity. These two classes share the same bounding assembly (see footnotes for Tables 6.2.33 and 6.2.34 for further details). This bounding assembly is used as the intact BWR assembly for all calculations with DFCs.

Intact PWR assemblies stored together with DFCs are limited to a maximum enrichment of 4.0 wt% ^{235}U, regardless of the fuel class. The results presented in Table 6.1.3 are for different enrichments for each class, ranging between 4.2 and 5.0 wt% ^{235}U, making it difficult to directly identify the bounding assembly. However, Table 6.1.4 shows results for an enrichment of 5.0 wt% for all fuel classes, with a soluble boron concentration of 300 ppm. The assembly class 15x15H has the highest reactivity. This is consistent with the results in Table 6.1.3, where the assembly class 15x15H is among the classes with the highest reactivity, but has the lowest initial enrichment. Therefore, the 15x15H assembly is used as the intact PWR assembly for all calculations with DFCs.

6.4.4.2.2 *Bare Fuel Rod Arrays*

A conservative approach is used to model both damaged fuel and fuel debris in the DFCs, using arrays of bare fuel rods:

- *Fuel in the DFCs is arranged in regular, rectangular arrays of bare fuel rods, i.e. all cladding and other structural material in the DFC is replaced by water.*
- *The active length of these rods is chosen to be the maximum active fuel length of all fuel assemblies listed in Section 6.2, which is 155 inch for BWR fuel and 150 inch for PWR fuel.*
- *To ensure the configuration with optimum moderation and highest reactivity is analyzed, the amount of fuel per unit length of the DFC is varied over a large range. This is achieved by changing the number of rods in the array and the rod pitch. The number of rods are varied between 9 (3x3) and 189 (17x17) for BWR fuel, and between 64 (8x8) and 729 (27x27) for PWR fuel.*
- *Analyses are performed for the minimum, maximum and typical pellet diameter of PWR and BWR fuel.*

This is a very conservative approach to model damaged fuel, and to model fuel debris configurations such as severely damaged assemblies and bundles of individual fuel rods, as the absorption in the cladding and structural material is neglected.

This is also a conservative approach to model fuel debris configurations such as bare fuel pellets due to the assumption of an active length of 155 inch (BWR) or 150 inch (PWR). The actual height of bare fuel pellets in a DFC would be significantly below these values due to the limitation of the fuel mass for each basket position.

To demonstrate the level of conservatism, additional analyses are performed with the DFC containing various realistic assembly configurations such as intact assemblies, assemblies with missing fuel rods and collapsed assemblies, i.e. assemblies with increased number of rods and decreased rod pitch.

As discussed in Section 6.4.4.2, all calculations are performed for full cask models, containing the maximum permissible number of DFCs together with intact assemblies.

Graphical presentations of the calculated maximum k_{eff} for each case as a function of the fuel mass per unit length of the DFC are shown in Figures 6.4.13 (BWR) and 6.4.14 (PWR). The results for the bare fuel rods show a distinct peak in the maximum k_{eff} at about 2 kg UO_2/inch for BWR fuel, and at about 3.5 kgUO_2/inch for PWR fuel.

The realistic assembly configurations are typically about 0.01 (delta-k) or more below the peak results for the bare fuel rods, demonstrating the conservatism of this approach to model damaged fuel and fuel debris configurations such as severely damaged assemblies and bundles of fuel rods.

For fuel debris configurations consisting of bare fuel pellets only, the fuel mass per unit length would be beyond the value corresponding to the peak reactivity. For example, for DFCs filled with a mixture of 60 vol% fuel and 40 vol% water the fuel mass per unit length is 3.36 kgUO_2/inch for the BWR DFC and 7.92 kgUO_2/inch for the PWR DFC. The corresponding reactivities are significantly below the peak reactivies. The difference is about 0.005 (delta-k) for BWR fuel and 0.01 (delta-k) or more for PWR fuel. Furthermore, the filling height of the DFC would be less than 70 inches in these examples due to the limitation of the fuel mass per basket position, whereas the calculation is conservatively performed for a height of 155 inch (BWR) or 150 inch (PWR). These results demonstrate that even for the fuel debris configuration of bare fuel pellets, the model using bare fuel rods is a conservative approach.

6.4.4.2.3 Distributed Enrichment in BWR Fuel

BWR fuel usually has an enrichment distribution in each planar cross section, and is characterized by the maximum planar average enrichment. For intact fuel it has been shown that using the average enrichment for each fuel rod in a cross section is conservative, i.e. the reactivity is higher than calculated for the actual enrichment distribution (See Appendix 6.B).

For damaged fuel assemblies, additional configurations are analyzed to demonstrate that the distributed enrichment does not have a significant impact on the reactivity of the damaged assembly under accident conditions. Specifically, the following two scenarios were analyzed:

- *As a result of an accident, fuel rods with lower enrichment relocate from the top part to the bottom part of the assembly. This results in an increase of the average enrichment in the top part, but at the same time the amount of fuel in that area is reduced compared to the intact assembly.*
- *As a result of an accident, fuel rods with higher enrichment relocate from the top part to the bottom part of the assembly. This results in an increase of the average enrichment in the bottom part, and at the same time the amount of fuel in that area is increased compared to the intact assembly, leading to a reduction of the water content.*

In both scenarios, a compensation of effects on reactivity is possible, as the increase of reactivity due to the increased planar average enrichment might be offset by the possible reduction of reactivity due to the change in the fuel to water ratio. A selected number of calculations have been performed for these scenarios and the results show that there is only a minor change in reactivity. These calculations are shown in Figure 6.4.13 in the group of the explicit assemblies. Consequently, it is appropriate to qualify damaged BWR fuel assemblies and fuel debris based on the maximum planar average enrichment. For assemblies with missing fuel rods, this maximum planar average enrichment has to be determined based on the enrichment and number of rods still present in the assembly when loaded into the DFC.

6.4.4.2.4 Results for MPC-68 and MPC-68FF

The MPC-68 and MPC-68FF allows the storage of up to sixteen DFCs in the shaded cells on the periphery of the basket shown in Figure 6.4.11. In the MPC-68FF, up to 8 of these cells may contain DFCs with fuel debris. The various configurations outlined in Sections 6.4.4.2.2 and 6.4.4.2.3 are analyzed with an enrichment of the intact fuel of 3.7% ^{235}U and an enrichment of damaged fuel or fuel debris of 4.0% ^{235}U. For the intact assembly, the bounding assembly of the 9x9E and 9x9F fuel classes was chosen. This assembly has the highest reactivity of all BWR assembly classes for the initial enrichment of 3.7 wt% ^{235}U, as demonstrated in Table 6.4.7. The results for the various configurations are summarized in Figure 6.4.13 and in Table 6.4.8. Figure 6.4.13 shows the maximum k_{eff}, including bias and calculational uncertainties, for various actual and hypothetical damaged fuel or fuel debris configurations as a function of the fuel mass per unit length of the DFC. Table 6.4.8 lists the highest maximum k_{eff} for the various configurations. All maximum k_{eff} values are below the 0.95 regulatory limit.

6.4.4.2.5 Results for MPC-24E and MPC-24EF

The MPC-24E allows the storage of up to four DFCs with damaged fuel in the four outer fuel baskets cells shaded in Figure 6.4.12. The MPC-24EF allows storage of up to four DFCs with damaged fuel or fuel debris in these locations. These locations are designed with a larger box ID to accommodate the DFCs. For an enrichment of 4.0 wt% ^{235}U for the intact fuel, damaged fuel and fuel debris, the results for the various configurations outlined in Section 6.4.4.2.2 are summarized in Figure 6.4.14 and in Table 6.4.9. Figure 6.4.14 shows the maximum k_{eff}, including bias and calculational uncertainties, for various actual and hypothetical damaged fuel and fuel debris configurations as a function of the fuel mass per unit length of the DFC. For the intact assemblies, the 15x15H assembly class was chosen. This assembly class has the highest reactivity of all PWR assembly classes for a given initial enrichment. This is demonstrated in Table 6.1.4. Table 6.4.9 lists the highest maximum k_{eff} for the various configurations. All maximum k_{eff} values are below the 0.95 regulatory limit.

6.4.5 Fuel Assemblies with Missing Rods

For fuel assemblies that are qualified for damaged fuel storage, missing and/or damaged fuel rods are acceptable. However, for fuel assemblies to meet the limitations of intact fuel assembly storage, missing fuel rods must be replaced with dummy rods that displace a volume of water that is equal to, or larger than, that displaced by the original rods.

6.4.6 Thoria Rod Canister

The Thoria Rod Canister is similar to a DFC with an internal separator assembly containing 18 intact fuel rods. The configuration is illustrated in Figure 6.4.15. The k_{eff} value for an MPC-68F filled with Thoria Rod Canisters is calculated to be 0.1813. This low reactivity is attributed to the relatively low content in ^{235}U (equivalent to UO_2 fuel with an enrichment of approximately 1.7 wt% ^{235}U), the large spacing between the rods (the pitch is approximately 1", the cladding OD is 0.412") and the absorption in the separator assembly. Together with the maximum k_{eff} values listed in Tables 6.1.7 and 6.1.8 this result demonstrates, that the k_{eff} for a Thoria Rod Canister loaded into the MPC68 or the MPC68F together with other approved fuel assemblies or DFCs will remain well below the regulatory requirement of $k_{eff} < 0.95$.

6.4.7 Sealed Rods replacing BWR Water Rods

Some BWR fuel assemblies contain sealed rods filled with a non-fissile material instead of water rods. Compared to the configuration with water rods, the configuration with sealed rods has a reduced amount of moderator, while the amount of fissile material is maintained. Thus, the

reactivity of the configuration with sealed rods will be lower compared to the configuration with water rods. Any configuration containing sealed rods instead of water rods is therefore bounded by the analysis for the configuration with water rods and no further analysis is required to demonstrate the acceptability. Therefore, for all BWR fuel assemblies analyzed, it is permissible that water rods are replaced by sealed rods filled with a non-fissile material.

6.4.8 Non-fuel Hardware in PWR Fuel Assemblies

Non-fuel hardware such as Thimble Plugs (TPs), Burnable Poison Rod Assemblies (BPRAs), Control Rod Assemblies (CRAs), Axial Power Shaping Rods (APSRs) and similar devices are permitted for storage with all PWR fuel types. Non-fuel hardware is inserted in the guide tubes of the assemblies. For pure water, the reactivity of any PWR assembly with inserts is bounded by (i.e. lower than) the reactivity of the same assembly without the insert. This is due to the fact that the insert reduces the amount of moderator in the assembly, while the amount of fissile material remains unchanged. This conclusion is supported by the calculation listed in table 6.2.4, which shows a significant reduction in reactivity as a result of voided guide tubes, i.e. the removal of the water from the guide tubes.

With the presence of soluble boron in the water, non-fuel hardware not only displaces water, but also the neutron absorber in the water. It is therefore possible that the insertion results in an increase of reactivity, specifically for higher soluble boron concentrations. As a bounding approach for the presence of non-fuel hardware, analyses were performed with empty (voided) guide tubes, i.e. any absorption of the hardware is neglected. If assemblies contain an instrument tube, this tube remains filled with borated water. Table 6.4.6 shows results for the variation in water density for cases with filled and voided guide tubes. These results show that the optimum moderator density depends on the soluble boron concentration, and on whether the guide tubes are filled or assumed empty. For the MPC-24 with 400 ppm and the MPC-32 with 1900 ppm, voiding the guide tubes results in a reduction of reactivity. All calculations for the MPC-24 and MPC-24E, and for the MPC-32 with 1900 ppm are therefore performed with water in the guide tubes. For the MPC-32 with 2600 ppm, the reactivity for voided guide tubes slightly exceeds the reactivity for filled guide tubes. However, this effect is not consistent across all assembly classes. Table 6.4.10 shows results with filled and voided guide tubes for all assembly classes in the MPC-32 at 2600ppm. Some classes show an increase, other classes show a decrease as a result of voiding the guide tubes. Therefore, for the results presented in the Section 6.1, Table 6.1.6, the maximum value for each class is chosen.

In summary, from a criticality safety perspective, non-fuel hardware inserted into PWR assemblies are acceptable for all allowable PWR types, and, depending on the assembly class, can increase the safety margin.

6.4.9 Neutron Sources in Fuel Assemblies

Fuel assemblies containing start-up neutron sources are permitted for storage in the HI-STORM 100 System. The reactivity of a fuel assembly is not affected by the presence of a neutron source (other than by the presence of the material of the source, which is discussed later). This is true because in a system with a keff less than 1.0, any given neutron population at any time, regardless of its origin or size, will decrease over time. Therefore, a neutron source of any strength will not increase reactivity, but only the neutron flux in a system, and no additional criticality analyses are required. Sources are inserted as rods into fuel assemblies, i.e. they replace either a fuel rod or water rod (moderator). Therefore, the insertion of the material of the source into a fuel assembly will not lead to an increase of reactivity either.

6.4.~~6~~*10* Applicability of HI-STAR Analyses to HI-STORM 100 System

Calculations previously supplied to the NRC in applications for the HI-STAR 100 System (Docket Numbers 71-9261 and 72-1008) are directly applicable to the HI-STORM storage and HI-TRAC transfer casks. The MPC designs are identical. The cask systems differ only in the overpack shield material. The limiting condition for the HI-STORM 100 System is the fully flooded HI-TRAC transfer cask. As demonstrated by the comparative calculations presented in Tables 6.1.1 through 6.1.~~3~~*8*, the shield material in the overpack (steel and lead for HI-TRAC, steel for HI-STAR) has a negligible impact on the eigenvalue of the cask systems. As a result, this analysis for the 125-ton HI-TRAC transfer cask is applicable to the 100-ton HI-TRAC transfer cask. In all cases, for the reference fuel assemblies, the maximum k_{eff} values are in good agreement and are conservatively less than the limiting k_{eff} value (0.95).

Table 6.4.1

MAXIMUM REACTIVITIES WITH REDUCED WATER DENSITIES FOR CASK ARRAYS†

	Water Density		MCNP4a Maximum k_{eff} ††	
Case Number	**Internal**	**External**	**MPC-24 (17x17A01 @ 4.0%)**	**MPC-68 (8x8C04 @ 4.2%)**
1	100%	single cask	0.9449	0.9348
2	100%	100%	0.9434	0.9339
3	100%	70%	0.9465	0.9339
4	100%	50%	0.9444	0.9347
5	100%	20%	0.9439	0.9338
6	100%	10%	0.9424	0.9336
7	100%	5%	0.9446	0.9333
8	100%	0%	0.9457	0.9338
9	70%	0%	0.8497	0.8488
10	50%	0%	0.7632	0.7631
11	20%	0%	0.5787	0.5797
12	10%	0%	0.5012	0.5139
13	5%	0%	0.4629	0.4763
14	10%	100%	0.4839	0.4946

~~Note:~~

~~1.From HI-STAR calculations in Docket Numbers 72-1008 and 71-9261 for identical MPC designs.~~

† For an infinite square array of casks with 60cm spacing between cask surfaces.

†† Maximum k_{eff} includes the bias, uncertainties, and calculational statistics, evaluated for the worst case combination of manufacturing tolerances.

Table 6.4.2

REACTIVITY EFFECTS OF PARTIAL CASK FLOODING

MPC-24 (17x17A01 @ 4.0% ENRICHMENT) ***(no soluble boron)***			
Flooded Condition (% Full)	Vertical Orientation	Flooded Condition (% Full)	Horizontal Orientation
25	0.9219	25	0.9119
50	0.9397	50	0.9321
75	0.9443	75	0.9423
100	0.9449	100	0.9449
MPC-68 (8x8C04 @ 4.2% ENRICHMENT)			
Flooded Condition (% Full)	Vertical Orientation	Flooded Condition (% Full)	Horizontal Orientation
25	0.9132	23.5	0.8586
50	0.9307	50	0.9088
75	0.9312	76.5	0.9275
100	0.9348	100	0.9348
MPC-32 (15x15F @ 5.0 % ENRICHMENT) 2600ppm Soluble Boron			
Flooded Condition (% Full)	*Vertical Orientation*	*Flooded Condition (% Full)*	*Horizontal Orientation*
25	*0.8927*	*31.25*	*0.9213*
50	*0.9215*	*50*	*0.9388*
75	*0.9350*	*68.75*	*0.9401*
100	*0.9445*	*100*	*0.9445*

Notes:

1. All values are maximum k_{eff} which include bias, uncertainties, and calculational statistics, evaluated for the worst case combination of manufacturing tolerances.

~~2.From HI-STAR calculations in Docket Numbers 72-1008 and 71-9261 for identical MPC designs.~~

Table 6.4.3

REACTIVITY EFFECT OF FLOODING THE PELLET-TO-CLAD GAP

Pellet-to-Clad Condition	MPC-24 17x17A01 4.0% Enrichment	MPC-68 8x8C04 4.2% Enrichment
dry	0.9404	0.9279
flooded *with unborated water*	0.9449	0.9348

Notes:

1. All values are maximum k_{eff} which includes bias, uncertainties, and calculational statistics, evaluated for the worst case combination of manufacturing tolerances.

~~2.From HI-STAR calculations in Docket Numbers 72-1008 and 71-9261 for identical MPC designs.~~

Table 6.4.4

~~DELETED~~

REACTIVITY EFFECT OF PREFERENTIAL FLOODING OF THE DFCs

DFC Configuration	*Preferential Flooding*	*Fully Flooded*
MPC-68 or MPC-68F with 68 DFCs (Assembly Classes 6x6A/B/C, 7x7A and 8x8A)	*0.6560*	*0.7857*
MPC-68 or MPC-68FF with 16 DFCs (All BWR Assembly Classes)	*0.6646*	*0.9328*
MPC-24E or MPC-24EF with 4 DFCs (All PWR Assembly Classes)	*0.7895*	*0.9480*

Notes:

1. *All values are maximum k_{eff} which includes bias, uncertainties, and calculational statistics, evaluated for the worst case combination of manufacturing tolerances.*

Table 6.4.5

MAXIMUM k_{eff} VALUES† IN THE DAMAGED FUEL CONTAINER

Condition	MCNP4a Maximum†† k_{eff}	
	DFC Dimensions: ID 4.93" THK. 0.12"	***DFC Dimensions: ID 4.81" THK. 0.11"***
6x6 Fuel Assembly		
6x6 Intact Fuel	0.7086	*0.7016*
w/32 Rods Standing	0.7183	*0.7117*
w/28 Rods Standing	0.7315	*0.7241*
w/24 Rods Standing	0.7086	*0.7010*
w/18 Rods Standing	0.6524	*0.6453*
Collapsed to 8x8 array	0.7845	*0.7857*
Dispersed Powder	0.7628	*0.7440*
7x7 Fuel Assembly		
7x7 Intact Fuel	0.7463	*0.7393*
w/41 Rods Standing	0.7529	*0.7481*
w/36 Rods Standing	0.7487	*0.7444*
w/25 Rods Standing	0.6718	*0.6644*

~~Note:~~

~~1.From HI-STAR calculations in Docket Numbers 72-1008 and 71-9261 for identical MPC designs.~~

---

† These calculations were performed with a planar-average enrichment of 3.0% and a ^{10}B loading of 0.0067 g/cm^2, which is 75% of a minimum ^{10}B loading of 0.0089 g/cm^2. The minimum ^{10}B loading in the MPC-68F is 0.010 g/cm^2. Therefore, the listed maximum k_{eff} values are conservative

†† Maximum k_{eff} includes bias, uncertainties, and calculational statistics, evaluated for the worst case combination of manufacturing tolerances.

Table 6.4.6

MAXIMUM k_{eff} VALUES WITH REDUCED BORATED WATER DENSITIES

Internal Water Density† in g/cm³	***Maximum k_{eff}***				
	MPC-24 (400ppm) @ 5.0 %	***MPC-32 (1900ppm) @ 4.1 %***		***MPC-32 (2600ppm) @ 5.0 %***	
Guide Tubes	*filled*	*filled*	*void*	*filled*	*void*
1.005	*NC††*	*0.9403*	*0.9395*	*NC*	*0.9481*
1.00	*0.9395*	*0.9411*	*0.9400*	*0.9445*	*0.9483*
0.99	*0.9380*	*0.9393*	*0.9396*	*0.9438*	*0.9462*
0.98	*0.9340*	*0.9403*	*0.9376*	*0.9447*	*0.9465*
0.97	*0.9316*	*0.9397*	*0.9391*	*0.9453*	*0.9476*
0.96	*0.9309*	*NC*	*NC*	*0.9446*	*0.9466*
0.95	*0.9292*	*0.9380*	*0.9384*	*0.9451*	*0.9468*
0.94	*NC*	*NC*	*NC*	*0.9445*	*0.9467*
0.93	*0.9219*	*0.9392*	*0.9352*	*0.9465*	*0.9460*
0.92	*NC*	*NC*	*NC*	*0.9458*	*0.9450*
0.91	*NC*	*NC*	*NC*	*0.9447*	*0.9452*
0.90	*0.9180*	*0.9384*	*NC*	*0.9449*	*0.9454*
0.80	*0.8903*	*0.9322*	*NC*	*0.9431*	*0.9390*
0.70	*0.8616*	*0.9190*	*NC*	*0.9339*	*0.9259*
0.60	*0.8286*	*0.8990*	*NC*	*0.9194*	*0.9058*
0.40	*0.7439*	*0.8280*	*NC*	*0.8575*	*0.8410*
0.20	*0.6276*	*0.7002*	*NC*	*0.7421*	*0.7271*
0.10	*0.5563*	*0.6178*	*NC*	*0.6662*	*0.6584*

† External moderator is modeled at 0%. This is consistent with the results demonstrated in Table 6.4.1.
†† NC: Not Calculated

Table 6.4.7

MAXIMUM k_{eff} VALUES FOR INTACT BWR FUEL ASSEMBLIES WITH A MAXIMUM PLANAR AVERAGE ENRICHMENT OF 3.7 wt% ^{235}U

Fuel Assembly Class	***Maximum k_{eff}***
6x6A	*0.8287*
6x6C	*0.8436*
7x7A	*0.8399*
7x7B	*0.9109*
8x8A	*0.8102*
8x8B	*0.9131*
8x8C	*0.9115*
8x8D	*0.9125*
8x8E	*0.9049*
8x8F	*0.9233*
9x9A	*0.9111*
9x9B	*0.9134*
9x9C	*0.9103*
9x9D	*0.9096*
9x9E	*0.9237*
9x9F	*0.9237*
9x9G	*0.9005*
10x10A	*0.9158*
10x10B	*0.9156*
10x10C	*0.9152*
10x10D	*0.9182*
10x10E	*0.8970*

Table 6.4.8

MAXIMUM k_{eff} VALUES IN THE GENERIC BWR DAMAGED FUEL CONTAINER FOR A MAXIMUM INITIAL ENRICHMENT OF 4.0 wt% ^{235}U FOR DAMAGED FUEL AND 3.7 wt% ^{235}U FOR INTACT FUEL

Model Configuration inside the DFC	***Maximum k_{eff}***
Intact Assemblies (4 assemblies analyzed)	*0.9241*
Assemblies with missing rods (7 configurations analyzed)	*0.9240*
Assemblies with distributed enrichment (4 configurations analyzed)	*0.9245*
Collapsed Assemblies (6 configurations analyzed)	*0.9258*
Regular Arrays of Bare Fuel Rods (31 configurations analyzed)	*0.9328*

Table 6.4.9

MAXIMUM k_{eff} VALUES IN THE GENERIC PWR DAMAGED FUEL CONTAINER FOR A MAXIMUM INITIAL ENRICHMENT OF 4.0 wt% ^{235}U.

Model Configuration inside the DFC	***Maximum k_{eff}***
Intact Assemblies (2 assemblies analyzed)	*0.9340*
Assemblies with missing rods (4 configurations analyzed)	*0.9350*
Collapsed Assemblies (6 configurations analyzed)	*0.9360*
Regular Arrays of Bare Fuel Rods (36 configurations analyzed)	*0.9480*

Table 6.4.10

MAXIMUM k_{eff} VALUES WITH FILLED AND VOIDED GUIDE TUBES

Fuel Class	***MPC-32 (2600ppm) @ 5.0 %***	
	Guide Tubes Filled, Moderator Density 0.93	***Guide Tubes Voided, Moderator Density 1.00***
14x14A	*0.8362*	*0.8326*
14x14B	*0.8633*	*0.8585*
14x14C	*0.8808*	*0.8901*
14x14D	*0.8485*	*0.8413*
14x14E	*0.6240*	*0.6240*
15x15A	*0.9121*	*0.9094*
15x15B	*0.9286*	*0.9313*
15x15C	*0.9150*	*0.9181*
15x15D	*0.9419*	*0.9466*
15x15E	*0.9415*	*0.9434*
15x15F	*0.9465*	*0.9483*
15x15G	*0.9109*	*0.9135*
15X15H	*0.9301*	*0.9317*
16X16A	*0.8868*	*0.8924*
17x17A	*0.9145*	*0.9160*
17x17B	*0.9358*	*0.9371*
17X17C	*0.9431*	*0.9437*

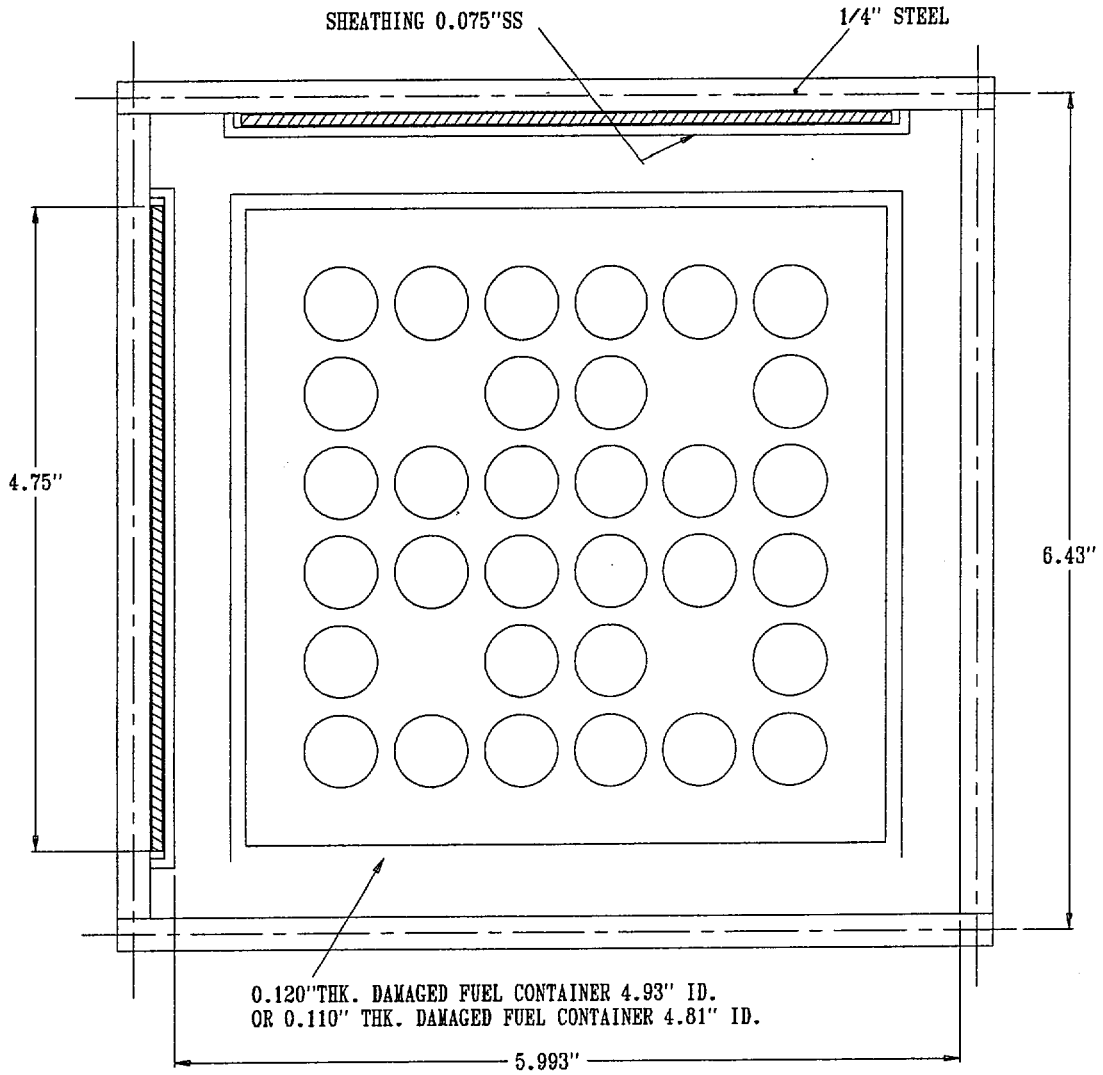

FIGURE 6.4.2; FAILED FUEL CALCULATION MODEL (PLANAR CROSS-SECTION) WITH 6X6 ARRAY WITH 4 MISSING RODS IN THE MPC-68 BASKET (SEE CHAPTER 1 FOR TRUE BASKET DIMENSIONS)

NOTE: THESE DIMENSIONS WERE CONSERVATIVELY USED FOR CRITICALITY ANALYSES.

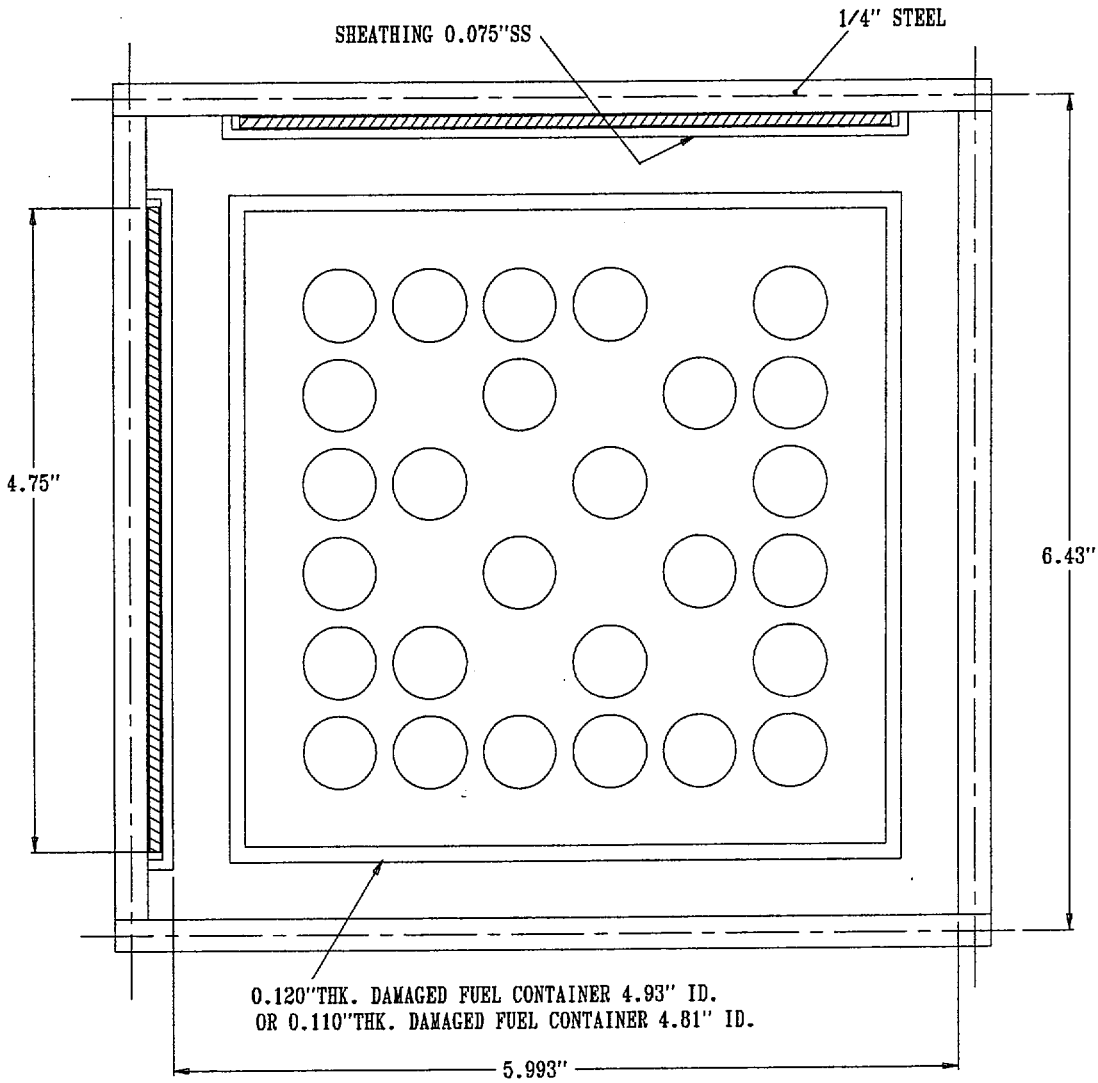

FIGURE 6.4.3; FAILED FUEL CALCULATION MODEL (PLANAR CROSS-SECTION) WITH 6X6 ARRAY WITH 8 MISSING RODS IN THE MPC-68 BASKET (SEE CHAPTER 1 FOR TRUE BASKET DIMENSIONS)

NOTE: THESE DIMENSIONS WERE CONSERVATIVELY USED FOR CRITICALITY ANALYSES.

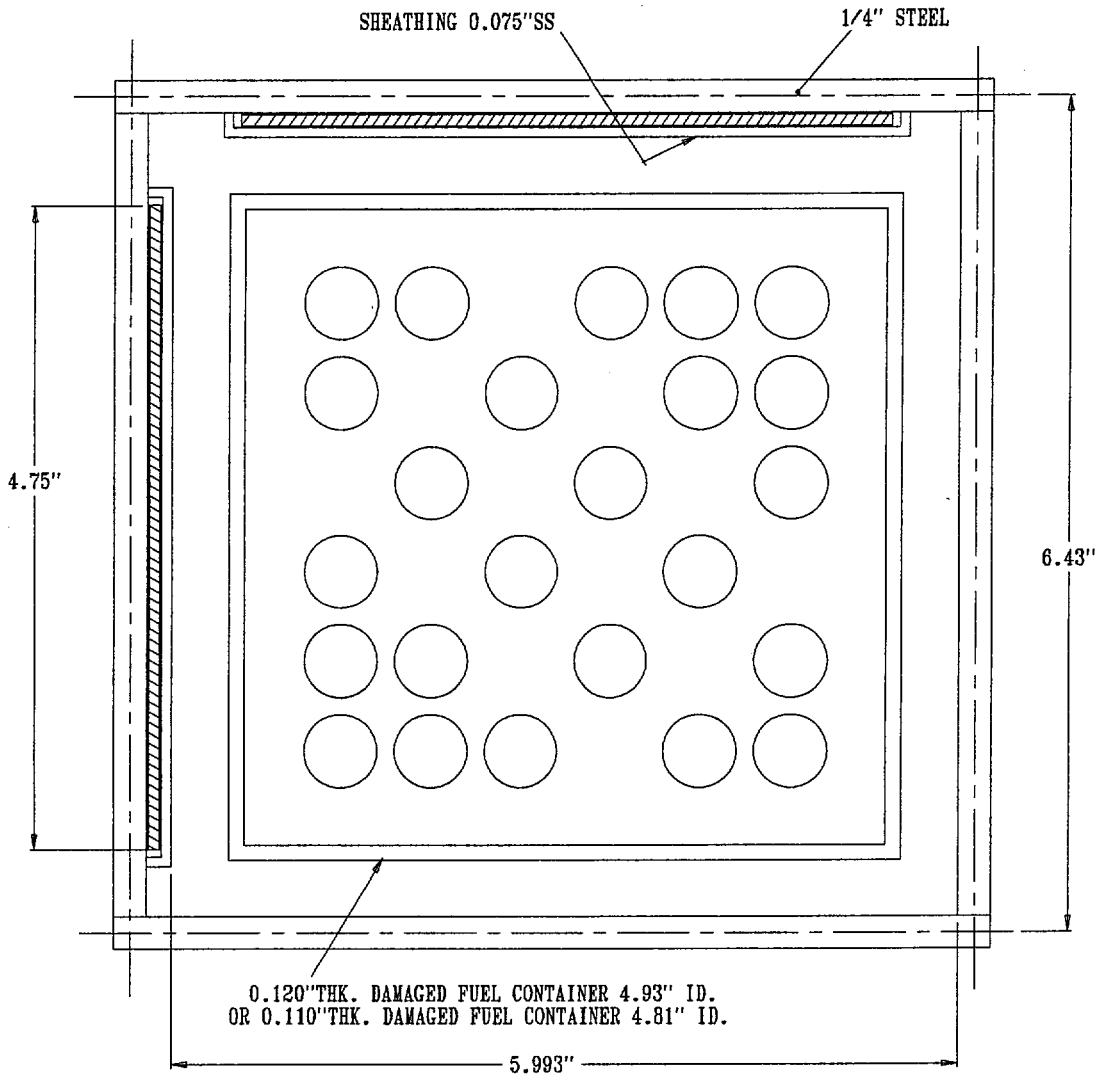

FIGURE 6.4.4; FAILED FUEL CALCULATION MODEL (PLANAR CROSS-SECTION) WITH 6X6 ARRAY WITH 12 MISSING RODS IN THE MPC-68 BASKET (SEE CHAPTER 1 FOR TRUE BASKET DIMENSIONS)

NOTE: THESE DIMENSIONS WERE CONSERVATIVELY USED FOR CRITICALITY ANALYSES.

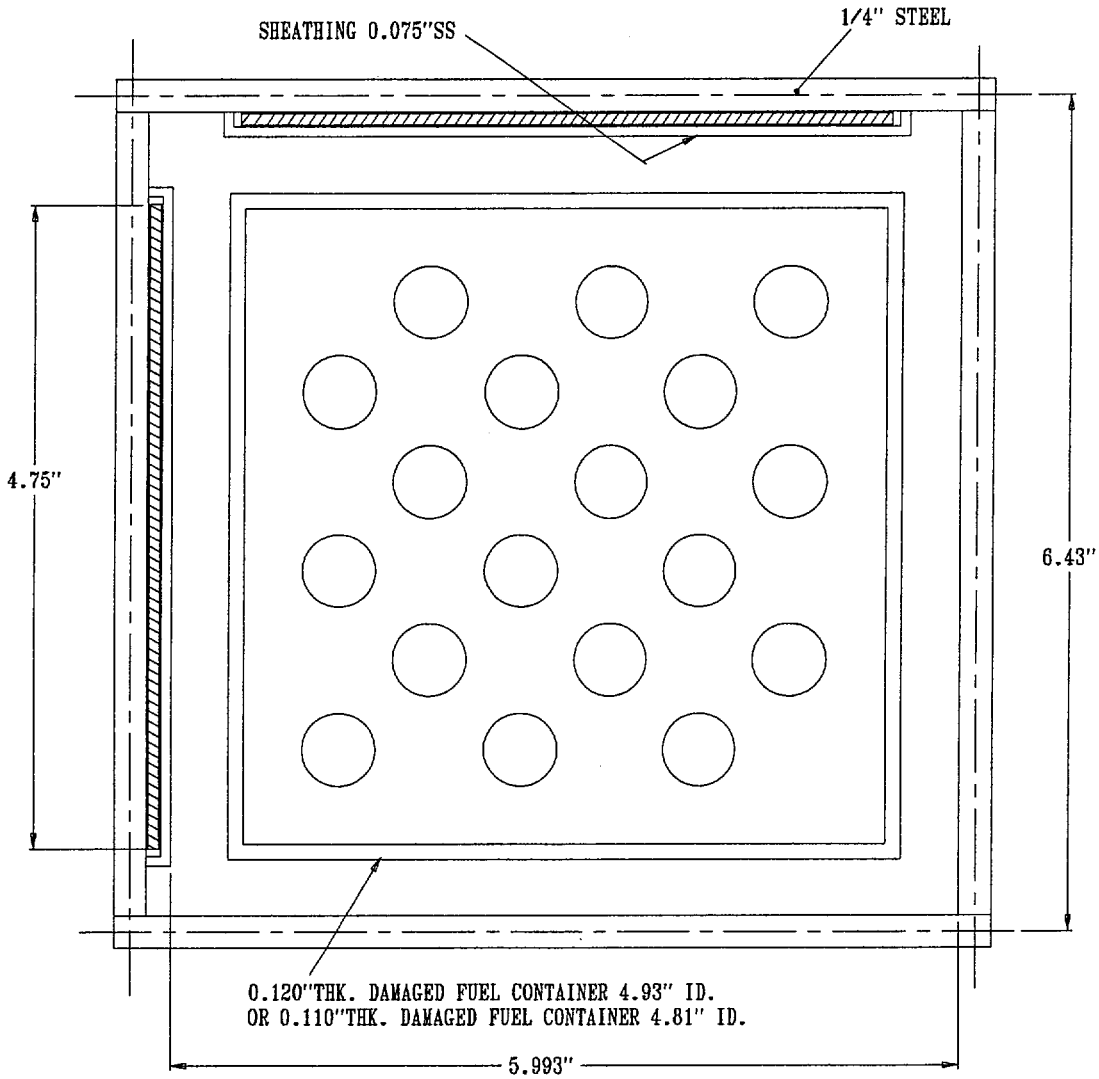

FIGURE 6.4.5; FAILED FUEL CALCULATION MODEL (PLANAR CROSS-SECTION) WITH 6X6 ARRAY WITH 18 MISSING RODS IN THE MPC-68 BASKET (SEE CHAPTER 1 FOR TRUE BASKET DIMENSIONS)

NOTE: THESE DIMENSIONS WERE CONSERVATIVELY USED FOR CRITICALITY ANALYSES.

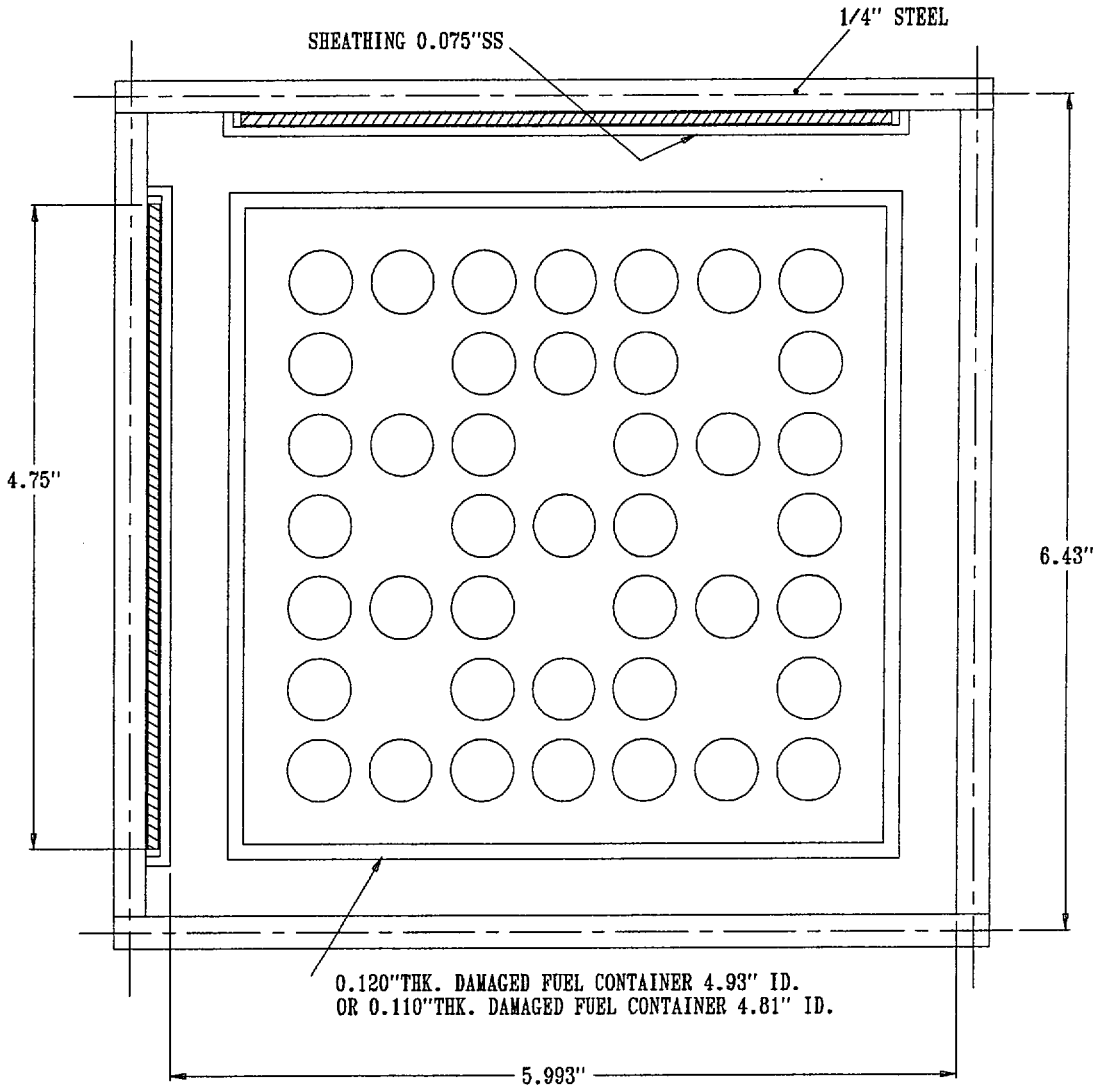

FIGURE 6.4.6; FAILED FUEL CALCULATION MODEL (PLANAR CROSS-SECTION) WITH 7X7 ARRAY WITH 8 MISSING RODS IN THE MPC-68 BASKET (SEE CHAPTER 1 FOR TRUE BASKET DIMENSIONS)

NOTE: THESE DIMENSIONS WERE CONSERVATIVELY USED FOR CRITICALITY ANALYSES.

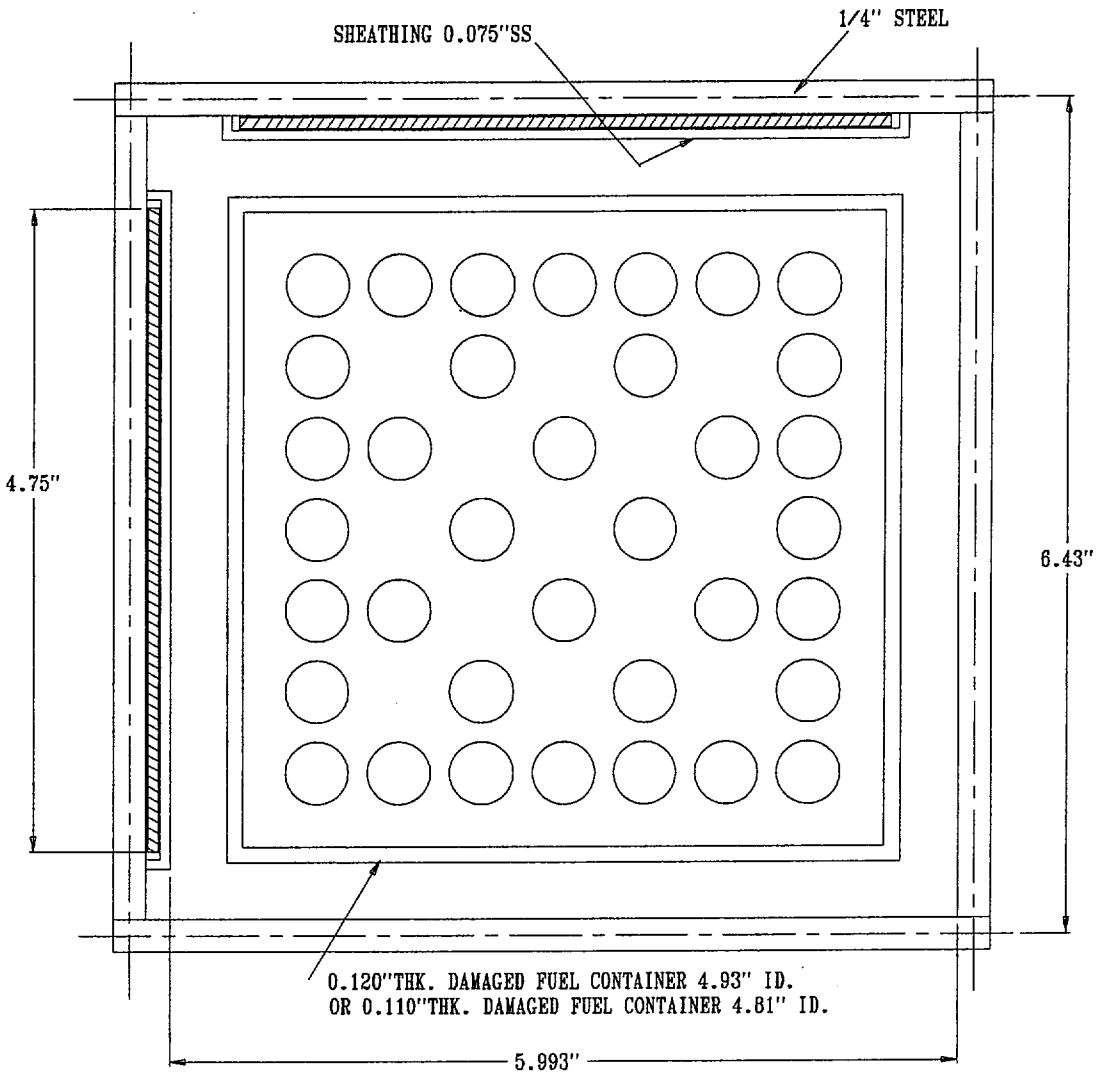

FIGURE 6.4.7; FAILED FUEL CALCULATION MODEL (PLANAR CROSS-SECTION) WITH 7X7 ARRAY WITH 13 MISSING RODS IN THE MPC-68 BASKET (SEE CHAPTER 1 FOR TRUE BASKET DIMENSIONS)

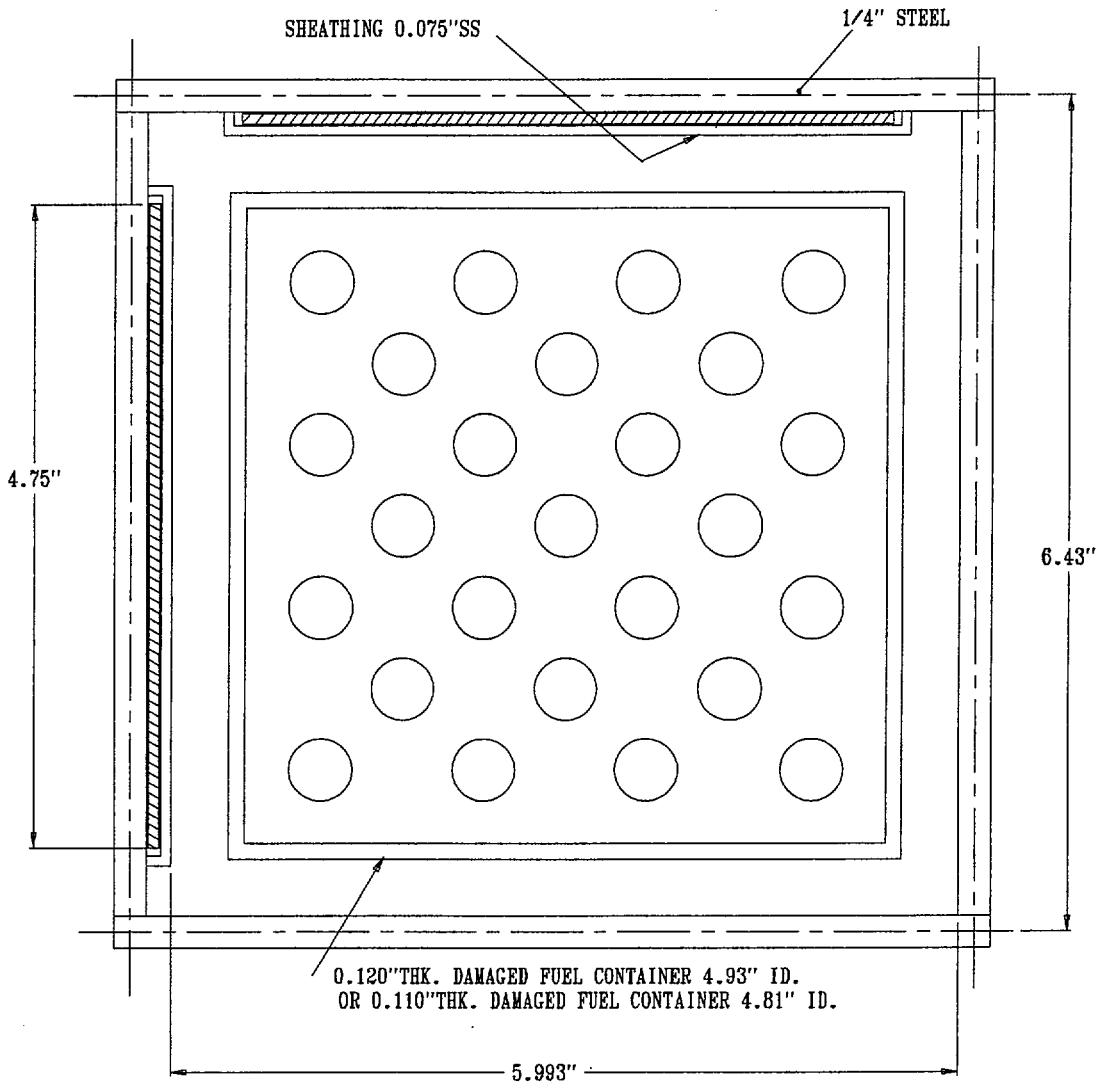

FIGURE 6.4.8; FAILED FUEL CALCULATION MODEL (PLANAR CROSS-SECTION) WITH 7X7 ARRAY WITH 24 MISSING RODS IN THE MPC-68 BASKET (SEE CHAPTER 1 FOR TRUE BASKET DIMENSIONS)

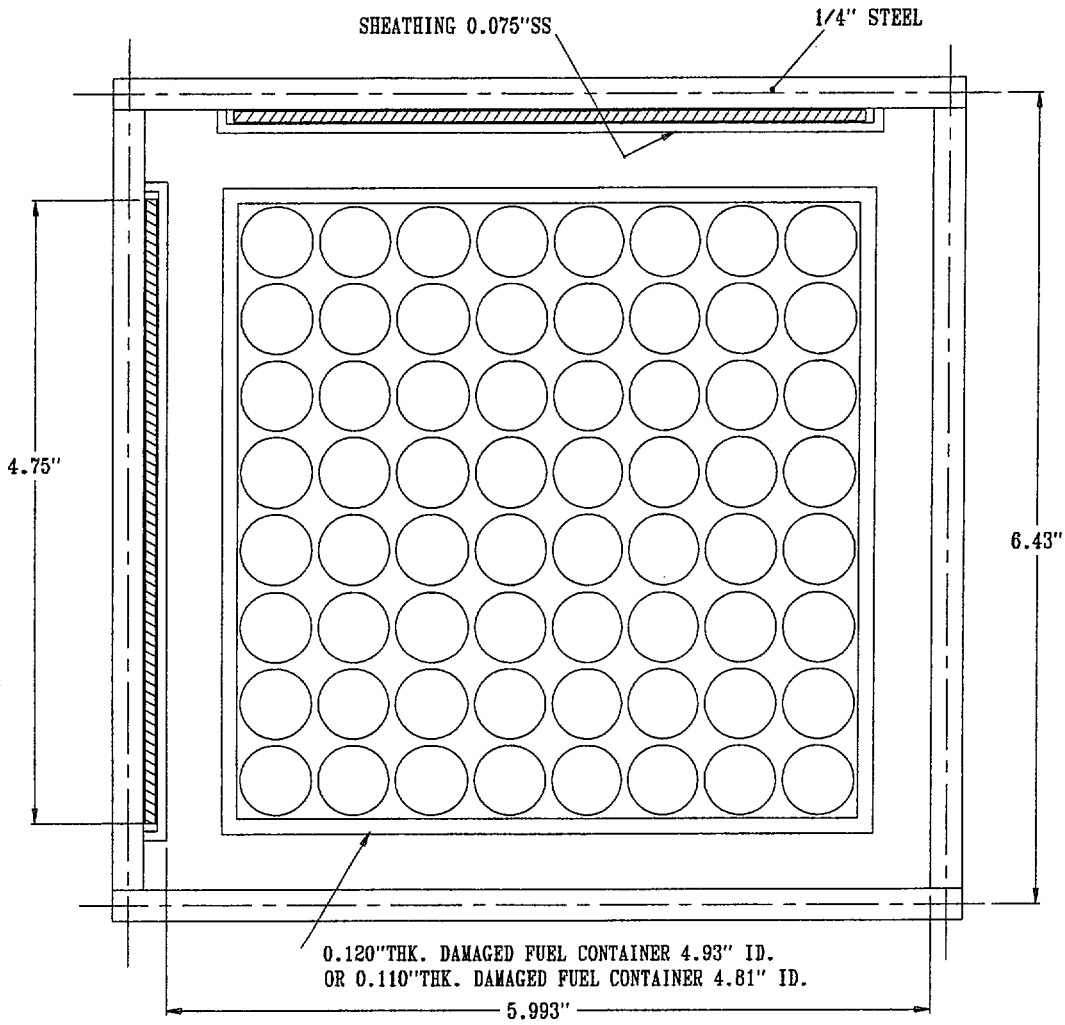

FIGURE 6.4.9; FAILED FUEL CALCULATION MODEL (PLANAR CROSS-SECTION) WITH DAMAGED FUEL COLLAPSED INTO 8X8 ARRAY IN THE MPC-68 BASKET (SEE CHAPTER 1 FOR TRUE BASKET DIMENSIONS)

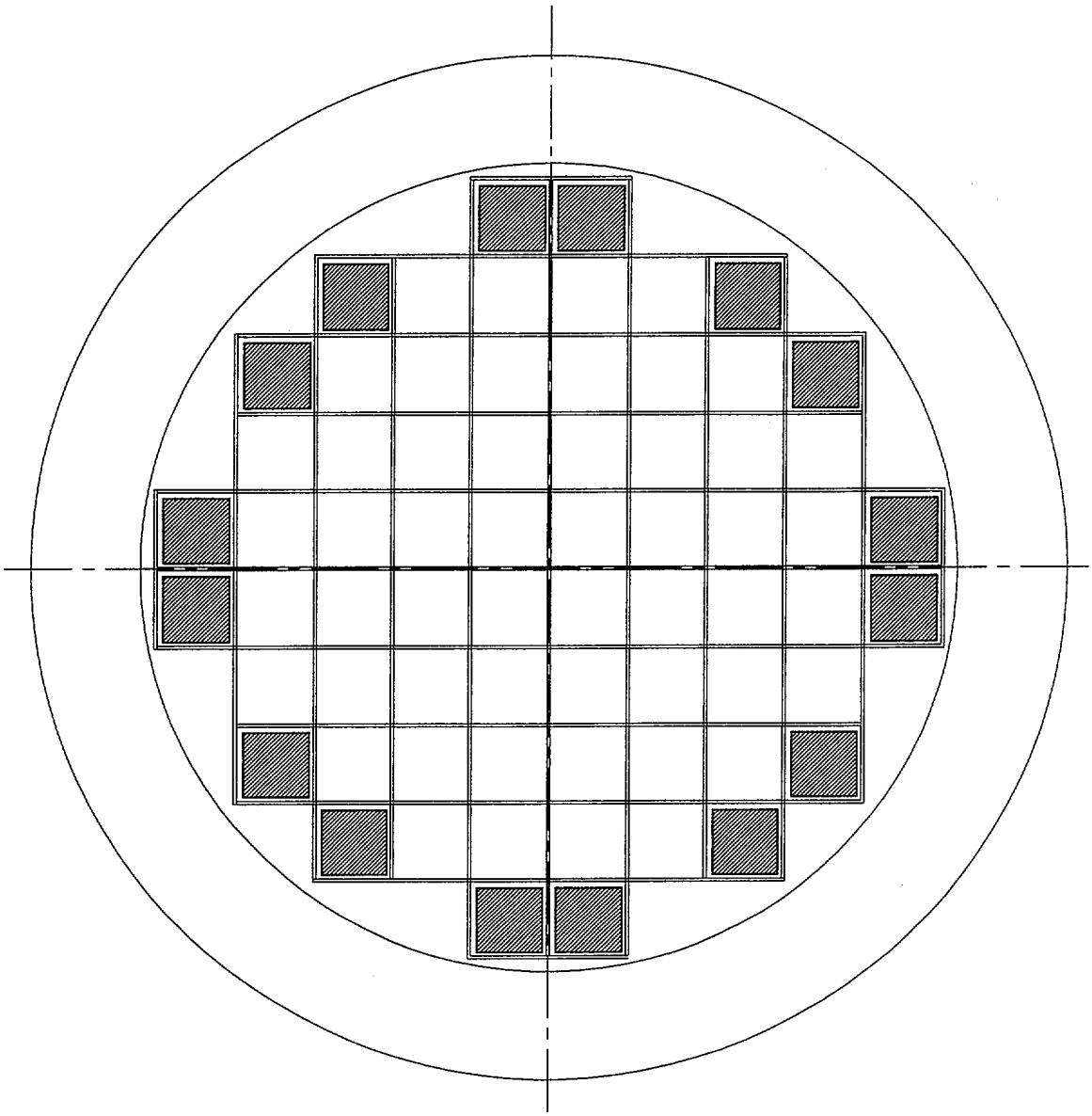

FIGURE 6.4.11; LOCATIONS OF THE DAMAGED FUEL CONTAINER IN THE MPC-68 AND MPC-68FF

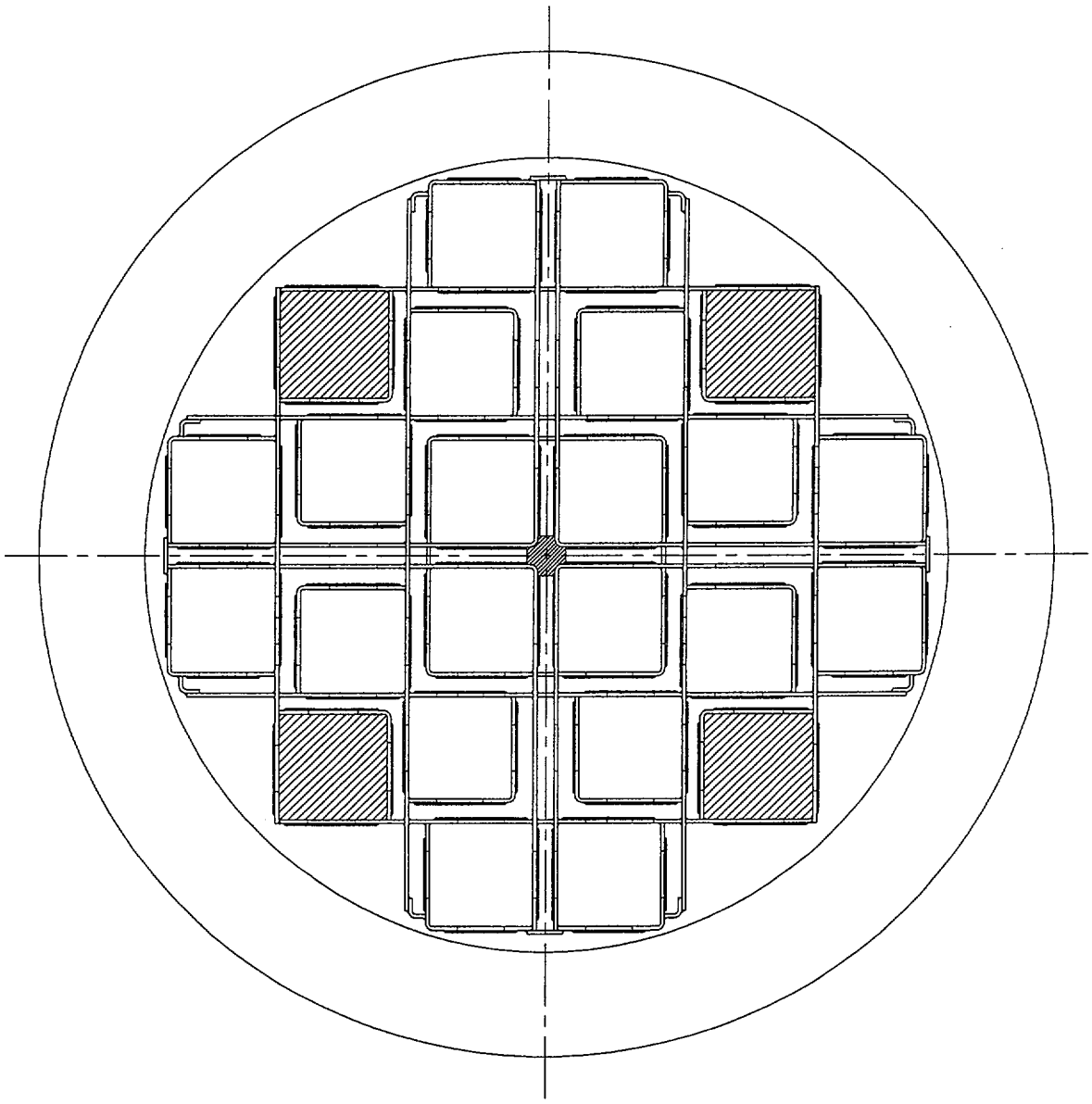

FIGURE 6.4.12; LOCATIONS OF THE DAMAGED FUEL CONTAINERS IN THE MPC 24E

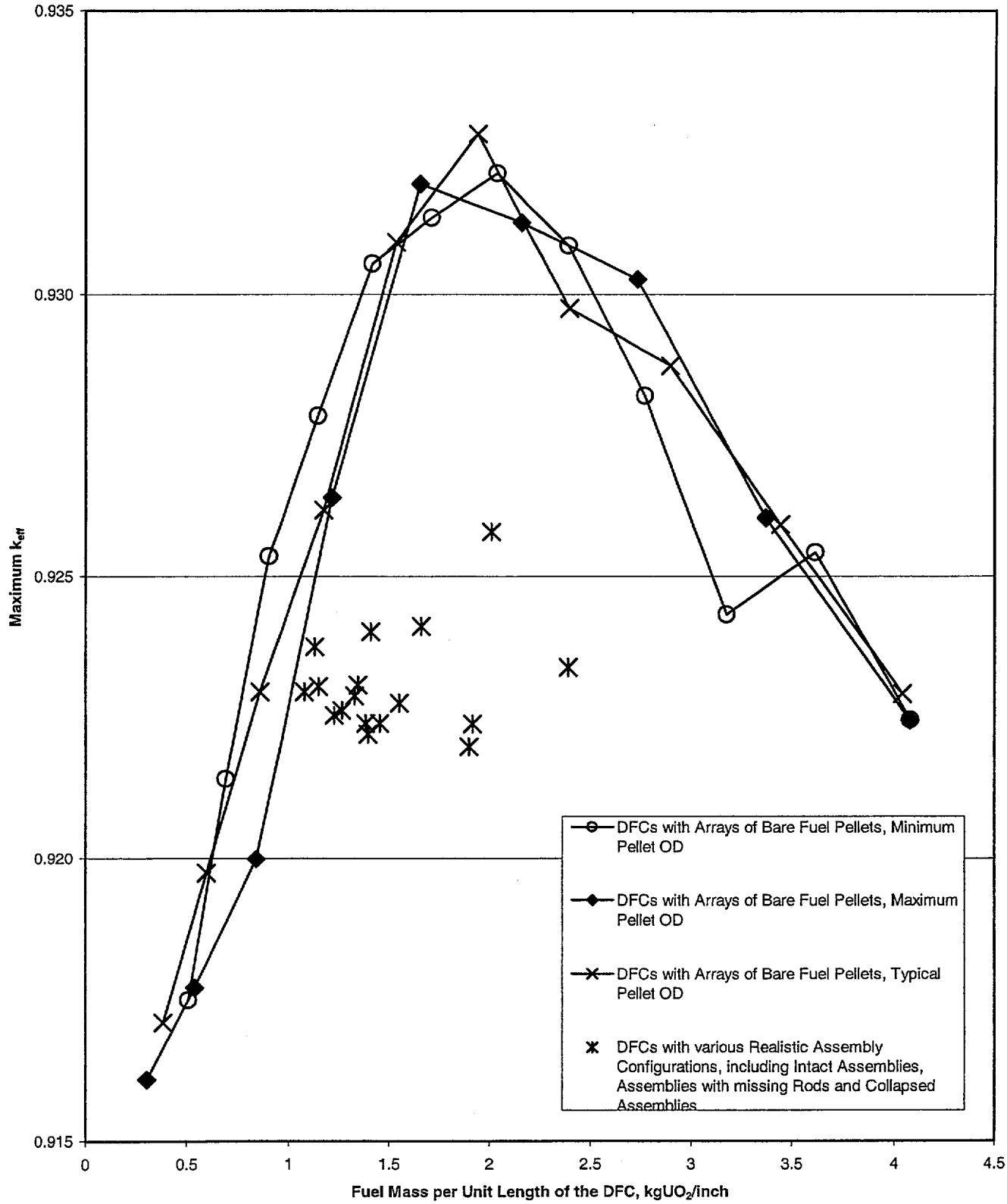

Figure 6.4.13: Maximum keff for the MPC-68 with Generic BWR Damaged Fuel Container, Initial Enrichment of 4.0 wt% for Damaged and 3.7 wt% for Intact Fuel.

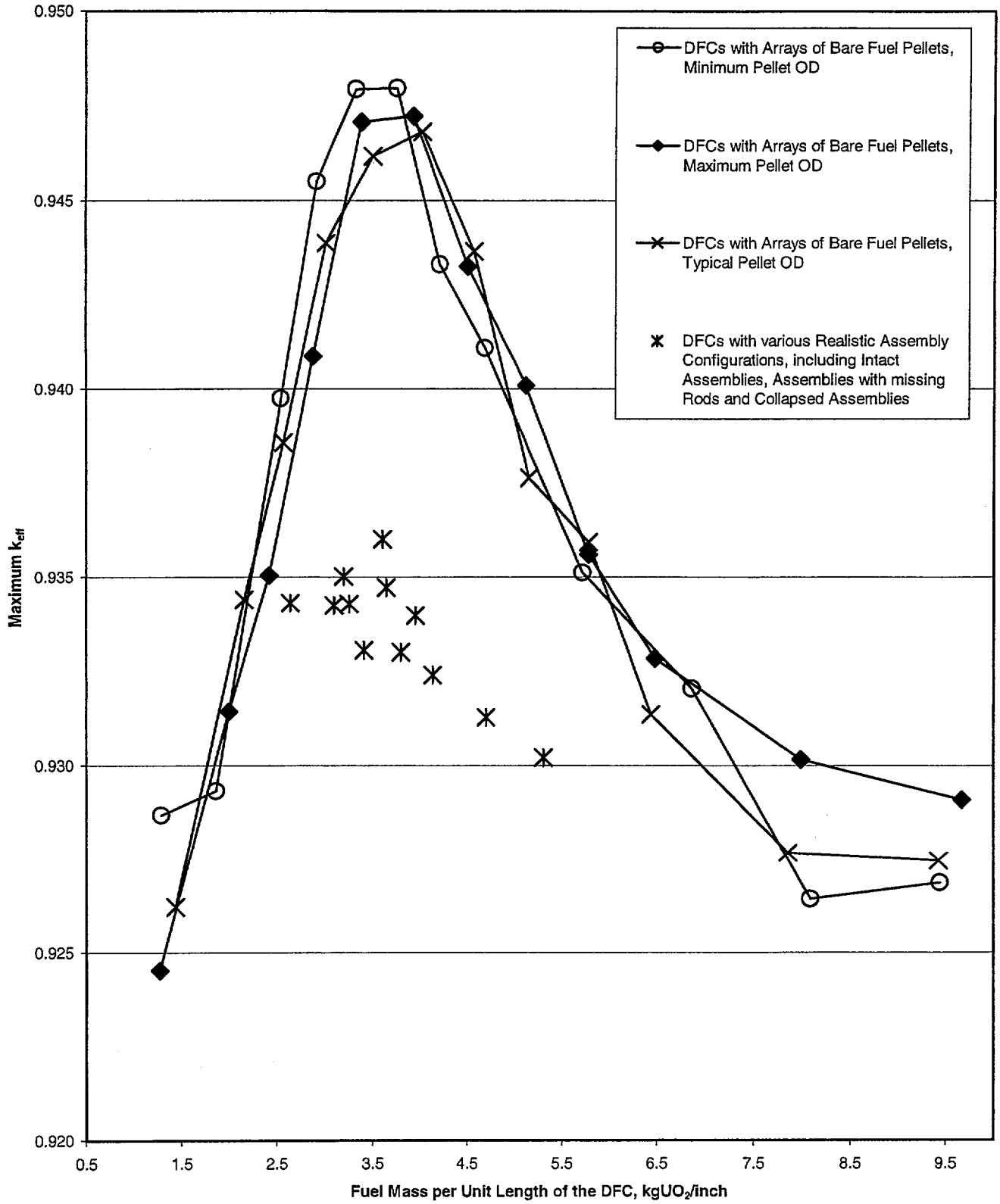

Figure 6.4.14: Maximum keff for the MPC-24E with Generic PWR Damaged Fuel Container, Initial Enrichment of 4.0 wt% for Damaged and Intact Fuel.

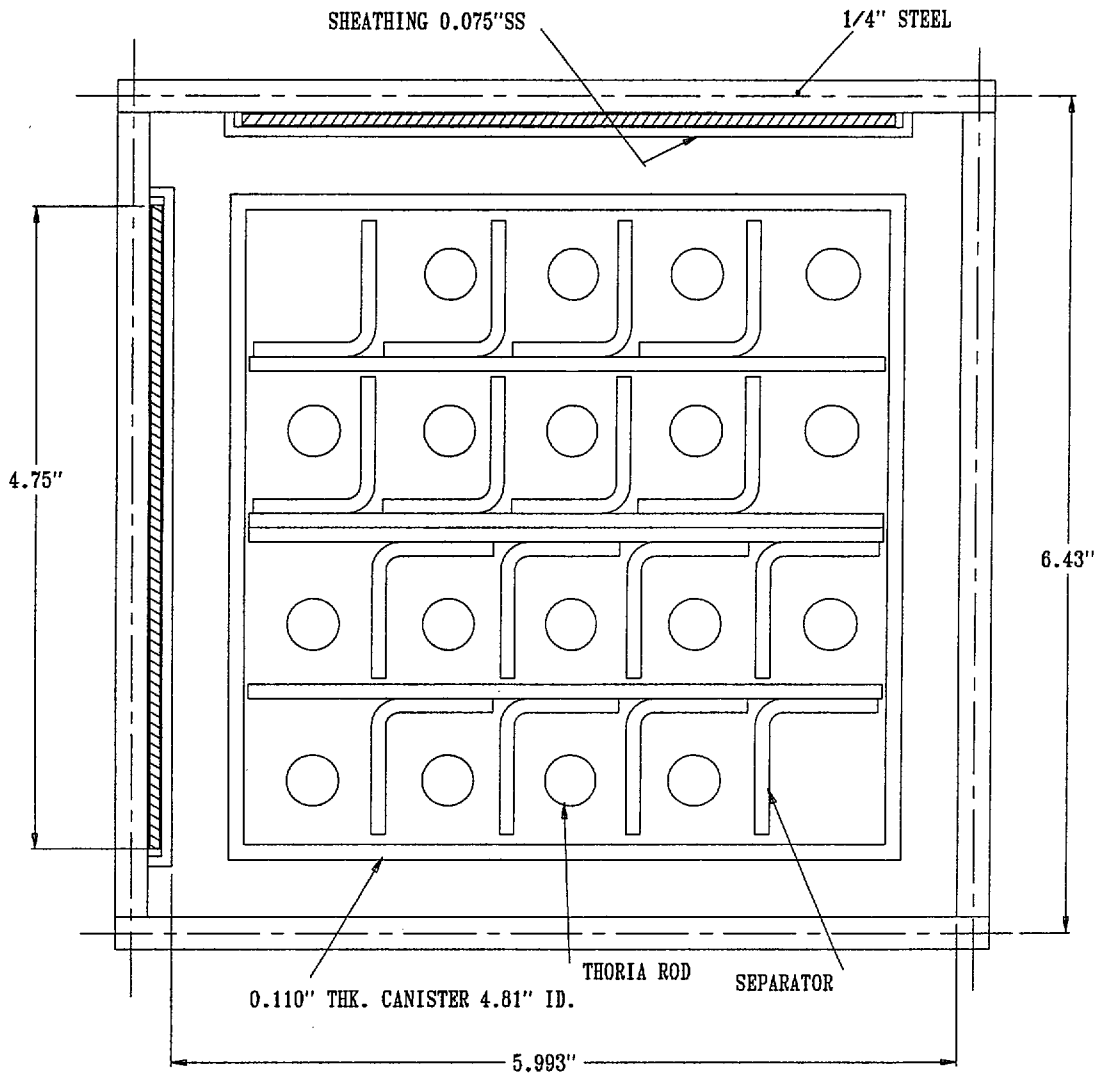

FIGURE 6.4.15; THORIA ROD CANISTER (PLANAR CROSS-SECTION)
WITH 18 THORIA RODS IN THE MPC-68 BASKET
(SEE CHAPTER 1 FOR TRUE BASKET DIMENSIONS)

APPENDIX 6.A: BENCHMARK CALCULATIONS

6.A.1 INTRODUCTION AND SUMMARY

Benchmark calculations have been made on selected critical experiments, chosen, in so far as possible, to bound the range of variables in the cask designs. Two independent methods of analysis were used, differing in cross section libraries and in the treatment of the cross sections. MCNP4a [6.A.1] is a continuous energy Monte Carlo code and KENO5a [6.A.2] uses group-dependent cross sections. For the KENO5a analyses reported here, the 238-group library was chosen, processed through the NITAWL-II [6.A.2] program to create a working library and to account for resonance self-shielding in uranium-238 (Nordheim integral treatment). The 238 group library was chosen to avoid or minimize the errors† (trends) that have been reported (e.g., [6.A.3 through 6.A.5]) for calculations with collapsed cross section sets.

In cask designs, the three most significant parameters affecting criticality are (1) the fuel enrichment, (2) the ^{10}B loading in the neutron absorber, and (3) the lattice spacing (or water-gap thickness if a flux-trap design is used). Other parameters, within the normal range of cask and fuel designs, have a smaller effect, but are also included in the analyses.

Table 6.A.1 summarizes results of the benchmark calculations for all cases selected and analyzed, as referenced in the table. The effect of the major variables are discussed in subsequent sections below. It is important to note that there is obviously considerable overlap in parameters since it is not possible to vary a single parameter and maintain criticality; some other parameter or parameters must be concurrently varied to maintain criticality.

One possible way of representing the data is through a spectrum index that incorporates all of the variations in parameters. KENO5a computes and prints the "energy of the average lethargy causing fission". In MCNP4a, by utilizing the tally option with the identical 238-group energy structure as in KENO5a, the number of fissions in each group may be collected and the energy of the average lethargy causing fission determined (post-processing).

Figures 6.A.1 and 6.A.2 show the calculated k_{eff} for the benchmark critical experiments as a function of the "energy of the average lethargy causing fission" for MCNP4a and KENO5a, respectively (UO_2 fuel only). The scatter in the data (even for comparatively minor variation in

---

† Small but observable trends (errors) have been reported for calculations with the 27-group and 44-group collapsed libraries. These errors are probably due to the use of a single collapsing spectrum when the spectrum should be different for the various cases analyzed, as evidenced by the spectrum indices.

critical parameters) represents experimental error† in performing the critical experiments within each laboratory, as well as between the various testing laboratories. The B&W critical experiments show a larger experimental error than the PNL criticals. This would be expected since the B&W criticals encompass a greater range of critical parameters than the PNL criticals.

Linear regression analysis of the data in Figures 6.A.1 and 6.A.2 show that there are no trends, as evidenced by very low values of the correlation coefficient (0.13 for MCNP4a and 0.21 for KENO5a). The total bias (systematic error, or mean of the deviation from a k_{eff} of exactly 1.000) for the two methods of analysis are shown in the table below.

Calculational Bias of MCNP4a and KENO5a		
	Total	Truncated
MCNP4a	0.0009±0.0011	0.0021±0.0006
KENO5a	0.0030±0.0012	0.0036±0.0009

The values of bias shown in this table include both the bias derived directly from the calculated k_{eff} values in Table 6.A.1, and a more conservative value derived by arbitrarily truncating to 1.000 any calculated value that exceeds 1.000. The bias and standard error of the bias were calculated by the following equations††, with the standard error multiplied by the one-sided K-factor for 95% probability at the 95% confidence level from NBS Handbook 91 [6.A.18] (for the number of cases analyzed, the K-factor is ~2.05 or slightly more than 2).

$$\bar{k} = \frac{1}{n} \sum_{i}^{n} k_i \qquad (6.A.1)$$

† A classical example of experimental error is the corrected enrichment in the PNL experiments, first as an addendum to the initial report and, secondly, by revised values in subsequent reports for the same fuel rods.

†† These equations may be found in any standard text on statistics, for example, reference [6.A.6] (or the MCNP4a manual) and is the same methodology used in MCNP4a and in KENO5a.

$$\sigma_{\bar{k}}^2 = \frac{\sum_{i=1}^{n} k_i^2 - (\sum_{i=1}^{n} k_i)^2 / n}{n\,(n-1)} \qquad (6.A.2)$$

$$\text{Bias} = (1 - \bar{k}) \pm K\sigma_{\bar{k}} \qquad (6.A.3)$$

where k_i are the calculated reactivities for n critical experiments; $\sigma_{\bar{k}}$ is the unbiased estimator of the standard deviation of the mean (also called the standard error of the bias (mean)); and K is the one-sided multiplier for 95% probability at the 95% confidence level (NBS Handbook 91 [6.A.18]).

Formula 6.A.3 is based on the methodology of the National Bureau of Standards (now NIST) and is used to calculate the values presented on page 6.A-2. The first portion of the equation, $(1-\bar{k})$, is the actual bias which is added to the MCNP4a and KENO5a results. The second term, $K\sigma_{\bar{k}}$, which corresponds to σ_B in Section 6.4.3, is the uncertainty or standard error associated with the bias. The K values used were obtained from the National Bureau of Standards Handbook 91 and are for one-sided statistical tolerance limits for 95% probability at the 95% confidence level. The actual K values for the 56 critical experiments evaluated with MCNP4a and the 53 critical experiments evaluated with KENO5a are 2.04 and 2.05, respectively.

The larger of the calculational biases (truncated bias) was used to evaluate the maximum k_{eff} values for the two cask designs.

6.A.2 Effect of Enrichment

The benchmark critical experiments include those with enrichments ranging from 2.46% to 5.74% and therefore span the enrichment range for the MPC designs. Figures 6.A.3 and 6.A.4 show the calculated k_{eff} values (Table 6.A.1) as a function of the fuel enrichment reported for the critical experiments. Linear regression analyses for these data confirms that there are no trends, as indicated by low values of the correlation coefficients (0.03 for MCNP4a and 0.38 for KENO5a). Thus, there are no corrections to the bias for the various enrichments.

As further confirmation of the absence of any trends with enrichment, the MPC-68 configuration was calculated with both MCNP4a and KENO5a for various enrichments. The cross-comparison of calculations with codes of comparable sophistication is suggested in Reg. Guide 3.41. Results of this comparison, shown in Table 6.A.2 and Figure 6.A.5, confirm no significant difference in the calculated values of k_{eff} for the two independent codes as evidenced by the 45° slope of

the curve. Since it is very unlikely that two independent methods of analysis would be subject to the same error, this comparison is considered confirmation of the absence of an enrichment effect (trend) in the bias.

6.A.3 Effect of ^{10}B Loading

Several laboratories have performed critical experiments with a variety of thin absorber panels similar to the Boral panels in the cask designs. Of these critical experiments, those performed by B&W are the most representative of the cask designs. PNL has also made some measurements with absorber plates, but, with one exception (a flux-trap experiment), the reactivity worth of the absorbers in the PNL tests is very low and any significant errors that might exist in the treatment of strong thin absorbers could not be revealed.

Table 6.A.3 lists the subset of experiments using thin neutron absorbers (from Table 6.A.1) and shows the reactivity worth (Δk) of the absorber.†

No trends with reactivity worth of the absorber are evident, although based on the calculations shown in Table 6.A.3, some of the B&W critical experiments seem to have unusually large experimental errors. B&W made an effort to report some of their experimental errors. Other laboratories did not evaluate their experimental errors.

To further confirm the absence of a significant trend with ^{10}B concentration in the absorber, a cross-comparison was made with MCNP4a and KENO5a (as suggested in Reg. Guide 3.41). Results are shown in Figure 6.A.6 and Table 6.A.4 for the MPC-68 cask†† geometry. These data substantiate the absence of any error (trend) in either of the two codes for the conditions analyzed (data points fall on a 45° line, within an expected 95% probability limit).

---

† The reactivity worth of the absorber panels was determined by repeating the calculation with the absorber analytically removed and calculating the incremental (Δk) change in reactivity due to the absorber.

†† The MPC-68 geometry was chosen for this comparison since it contains the greater number of Boral panels and would therefore be expected to be the most sensitive to trends (errors) in calculations.

6.A.4 Miscellaneous and Minor Parameters

6.A.4.1 Reflector Material and Spacings

PNL has performed a number of critical experiments with thick steel and lead reflectors.† Analysis of these critical experiments are listed in Table 6.A.5 (subset of data in Table 6.A.1). There appears to be a small tendency toward overprediction of k_{eff} at the lower spacing, although there are an insufficient number of data points in each series to allow a quantitative determination of any trends. The tendency toward overprediction at close spacing means that the cask calculations may be slightly more conservative than otherwise.

6.A.4.2 Fuel Pellet Diameter and Lattice Pitch

The critical experiments selected for analysis cover a range of fuel pellet diameters from 0.311 to 0.444 inches, and lattice spacings from 0.476 to 1.00 inches. In the cask designs, the fuel pellet diameters range from 0.303 to 0.3835 inches O.D. (0.496 to 0.580 inch lattice spacing) for PWR fuel and from 0.3224 to 0.494 inches O.D. (0.488 to 0.740 inch lattice spacing) for BWR fuel. Thus, the critical experiments analyzed provide a reasonable representation of the fuel in the MPC designs. Based on the data in Table 6.A.1, there does not appear to be any observable trend with either fuel pellet diameter or lattice pitch, at least over the range of the critical experiments or the cask designs.

6.A.4.3 Soluble Boron Concentration Effects

Various soluble boron concentrations were used in the B&W series of critical experiments and in one PNL experiment, with boron concentrations ranging up to 2550 ppm. Results of MCNP4a (and one KENO5a) calculations are shown in Table 6.A.6. Analyses of the very high boron concentration experiments (>1300 ppm) show a tendency to slightly overpredict reactivity for the three experiments exceeding 1300 ppm. In turn, this would suggest that the evaluation of the MPC-32 with various soluble boron concentration could be slightly conservative for the high soluble boron concentration.

6.A.5 MOX Fuel

The number of critical experiments with PuO_2 bearing fuel (MOX) is more limited than for UO_2 fuel. However, a number of MOX critical experiments have been analyzed and the results are shown in Table 6.A.7. Results of these analyses are generally above a k_{eff} of 1.00, indicating that when Pu is present, both MCNP4a and KENO5a overpredict the reactivity.

---

† Parallel experiments with a depleted uranium reflector were also performed but not included in the present analysis since they are not pertinent to the Holtec cask design. A lead reflector is also not directly pertinent, but might be used in future designs.

This may indicate that calculation for MOX fuel will be expected to be conservative, especially with MCNP4a. It may be noted that for the larger lattice spacings, the KENO5a calculated reactivities are below 1.00, suggesting that a small trend may exist with KENO5a. It is also possible that the overprediction in k_{eff} for both codes may be due to a small inadequacy in the determination of the Pu-241 decay and Am-241 growth. This possibility is supported by the consistency in calculated k_{eff} over a wide range of the spectral index (energy of the average lethargy causing fission).

6.A.6 References

[6.A.1] J.F. Briesmeister, Ed., "MCNP - A General Monte Carlo N-Particle Transport Code, Version 4A; Los Alamos National Laboratory, LA-12625-M (1993).

[6.A.2] SCALE 4.3, "A Modular Code System for Performing Standardized Computer Analyses for Licensing Evaluation", NUREG-0200 (ORNL-NUREG-CSD-2/U2/R5, Revision 5, Oak Ridge National Laboratory, September 1995.

[6.A.3] M.D. DeHart and S.M. Bowman, "Validation of the SCALE Broad Structure 44-G Group ENDF/B-Y Cross-Section Library for Use in Criticality Safety Analyses", NUREG/CR-6102 (ORNL/TM-12460) Oak Ridge National Laboratory, September 1994.

[6.A.4] W.C. Jordan et al., "Validation of KENOV.a", CSD/TM-238, Martin Marietta Energy Systems, Inc., Oak Ridge National Laboratory, December 1986.

[6.A.5] O.W. Hermann et al., "Validation of the Scale System for PWR Spent Fuel Isotopic Composition Analysis", ORNL-TM-12667, Oak Ridge National Laboratory, undated.

[6.A.6] R.J. Larsen and M.L. Marx, An Introduction to Mathematical Statistics and its Applications, Prentice-Hall, 1986.

[6.A.7] M.N. Baldwin et al., Critical Experiments Supporting Close Proximity Water Storage of Power Reactor Fuel, BAW-1484-7, Babcock and Wilcox Company, July 1979.

[6.A.8] G.S. Hoovier et al., Critical Experiments Supporting Underwater Storage of Tightly Packed Configurations of Spent Fuel Pins, BAW-1645-4, Babcock & Wilcox Company, November 1991.

[6.A.9] L.W. Newman et al., Urania Gadolinia: Nuclear Model Development and Critical Experiment Benchmark, BAW-1810, Babcock and Wilcox Company, April 1984.

[6.A.10] J.C. Manaranche et al., "Dissolution and Storage Experimental Program with 4.75% Enriched Uranium-Oxide Rods," Trans. Am. Nucl. Soc. 33: 362-364 (1979).

[6.A.11] S.R. Bierman and E.D. Clayton, Criticality Experiments with Subcritical Clusters of 2.35 wt % and 4.31 wt % ^{235}U Enriched UO_2 Rods in Water with Steel Reflecting Walls, PNL-3602, Battelle Pacific Northwest Laboratory, April 1981.

[6.A.12] S.R. Bierman et al., Criticality Experiments with Subcritical Clusters of 2.35 Wt% and 4.31 Wt% ^{235}U Enriched UO_2 Rods in Water with Uranium or Lead Reflecting Walls, PNL-3926, Battelle Pacific Northwest Laboratory, December, 1981.

[6.A.13] S.R. Bierman et al., Critical Separation Between Subcritical Clusters of 4.31 Wt % ^{235}U Enriched UO_2 Rods in Water with Fixed Neutron Poisons, PNL-2615, Battelle Pacific Northwest Laboratory, October 1977.

[6.A.14] S.R. Bierman, Criticality Experiments with Neutron Flux Traps Containing Voids, PNL-7167, Battelle Pacific Northwest Laboratory, April 1990.

[6.A.15] B.M. Durst et al., Critical Experiments with 4.31 wt % ^{235}U Enriched UO_2 Rods in Highly Borated Water Lattices, PNL-4267, Battelle Pacific Northwest Laboratory, August 1982.

[6.A.16] S.R. Bierman, Criticality Experiments with Fast Test Reactor Fuel Pins in Organic Moderator, PNL-5803, Battelle Pacific Northwest Laboratory, December 1986.

[6.A.17] E.G. Taylor et al., Saxton Plutonium Program Critical Experiments for the Saxton Partial Plutonium core, WCAP-3385-54, Westinghouse Electric Corp., Atomic Power Division, December 1965.

[6.A.18] M.G. Natrella, Experimental Statistics, National Bureau of Standards, Handbook 91, August 1963.

Table 6.A.1

Summary of Criticality Benchmark Calculations

	Reference	Identification	Enrich.	Calculated k_{eff}		EALF † (eV)	
				MCNP4a	KENO5a	MCNP4a	KENO5a
1	B&W-1484 (6.A.7)	Core I	2.46	0.9964 ± 0.0010	0.9898± 0.0006	0.1759	0.1753
2	B&W-1484 (6.A.7)	Core II	2.46	1.0008 ± 0.0011	1.0015 ± 0.0005	0.2553	0.2446
3	B&W-1484 (6.A.7)	Core III	2.46	1.0010 ± 0.0012	1.0005 ± 0.0005	0.1999	0.1939
4	B&W-1484 (6.A.7)	Core IX	2.46	0.9956 ± 0.0012	0.9901 ± 0.0006	0.1422	0.1426
5	B&W-1484 (6.A.7)	Core X	2.46	0.9980 ± 0.0014	0.9922 ± 0.0006	0.1513	0.1499
6	B&W-1484 (6.A.7)	Core XI	2.46	0.9978 ± 0.0012	1.0005 ± 0.0005	0.2031	0.1947
7	B&W-1484 (6.A.7)	Core XII	2.46	0.9988 ± 0.0011	0.9978 ± 0.0006	0.1718	0.1662
8	B&W-1484 (6.A.7)	Core XIII	2.46	1.0020 ± 0.0010	0.9952 ± 0.0006	0.1988	0.1965
9	B&W-1484 (6.A.7)	Core XIV	2.46	0.9953 ± 0.0011	0.9928 ± 0.0006	0.2022	0.1986
10	B&W-1484 (6.A.7)	Core XV ††	2.46	0.9910 ± 0.0011	0.9909 ± 0.0006	0.2092	0.2014
11	B&W-1484 (6.A.7)	Core XVI ††	2.46	0.9935 ± 0.0010	0.9889 ± 0.0006	0.1757	0.1713
12	B&W-1484 (6.A.7)	Core XVII	2.46	0.9962 ± 0.0012	0.9942 ± 0.0005	0.2083	0.2021

Table 6.A.1

Summary of Criticality Benchmark Calculations

	Reference	Identification	Enrich.	Calculated k_{eff}		EALF † (eV)	
				MCNP4a	KENO5a	MCNP4a	KENO5a
13	B&W-1484 (6.A.7)	Core XVIII	2.46	1.0036 ± 0.0012	0.9931 ± 0.0006	0.1705	0.1708
14	B&W-1484 (6.A.7)	Core XIX	2.46	0.9961 ± 0.0012	0.9971 ± 0.0005	0.2103	0.2011
15	B&W-1484 (6.A.7)	Core XX	2.46	1.0008 ± 0.0011	0.9932 ± 0.0006	0.1724	0.1701
16	B&W-1484 (6.A.7)	Core XXI	2.46	0.9994 ± 0.0010	0.9918 ± 0.0006	0.1544	0.1536
17	B&W-1645 (6A.8)	S-type Fuel, w/886 ppm B	2.46	0.9970 ± 0.0010	0.9924 ± 0.0006	1.4475	1.4680
18	B&W-1645 (6A.8)	S-type Fuel, w/746 ppm B	2.46	0.9990 ± 0.0010	0.9913 ± 0.0006	1.5463	1.5660
19	B&W-1645 (6A.8)	SO-type Fuel, w/1156 ppm B	2.46	0.9972 ± 0.0009	0.9949 ± 0.0005	0.4241	0.4331
20	B&W-1810 (6A.9)	Case 1 1337 ppm B	2.46	1.0023 ± 0.0010	NC	0.1531	NC
21	B&W-1810 (6A.9)	Case 12 1899 ppm B	2.46/4.02	1.0060 ± 0.0009	NC	0.4493	NC
22	French (6A.10)	Water Moderator 0 gap	4.75	0.9966 ± 0.0013	NC	0.2172	NC
23	French (6A.10)	Water Moderator 2.5 cm gap	4.75	0.9952 ± 0.0012	NC	0.1778	NC
24	French (6A.10)	Water Moderator 5 cm gap	4.75	0.9943 ± 0.0010	NC	0.1677	NC

Table 6.A.1

Summary of Criticality Benchmark Calculations

	Reference	Identification	Enrich.	Calculated k_{eff}		EALF † (eV)	
				MCNP4a	KENO5a	MCNP4a	KENO5a
25	French (6A.10)	Water Moderator 10 cm gap	4.75	0.9979 ± 0.0010	NC	0.1736	NC
26	PNL-3602 (6A.11)	Steel Reflector, 0 separation	2.35	NC	1.0004 ± 0.0006	NC	0.1018
27	PNL-3602 (6A.11)	Steel Reflector, 1.321 cm sepn.	2.35	0.9980 ± 0.0009	0.9992 ± 0.0006	0.1000	0.0909
28	PNL-3602 (6A.11)	Steel Reflector, 2.616 cm sepn	2.35	0.9968 ± 0.0009	0.9964 ± 0.0006	0.0981	0.0975
29	PNL-3602 (6A.11)	Steel Reflector, 3.912 cm sepn.	2.35	0.9974 ± 0.0010	0.9980 ± 0.0006	0.0976	0.0970
30	PNL-3602 (6A.11)	Steel Reflector, infinite sepn.	2.35	0.9962 ± 0.0008	0.9939 ± 0.0006	0.0973	0.0968
31	PNL-3602 (6A.11)	Steel Reflector, 0 cm sepn.	4.306	NC	1.0003 ± 0.0007	NC	0.3282
32	PNL-3602 (6A.11)	Steel Reflector, 1.321 cm sepn.	4.306	0.9997 ± 0.0010	1.0012 ± 0.0007	0.3016	0.3039
33	PNL-3602 (6A.11)	Steel Reflector, 2.616 cm sepn.	4.306	0.9994 ± 0.0012	0.9974 ± 0.0007	0.2911	0.2927
34	PNL-3602 (6A.11)	Steel Reflector, 5.405 cm sepn.	4.306	0.9969 ± 0.0011	0.9951 ± 0.0007	0.2828	0.2860
35	PNL-3602 (6A.11)	Steel Reflector, Infinite sepn.	4.306	0.9910 ± 0.0020	0.9947 ± 0.0007	0.2851	0.2864
36	PNL-3602 (6A.11)	Steel Reflector, with Boral Sheets	4.306	0.9941 ± 0.0011	0.9970 ± 0.0007	0.3135	0.3150

Table 6.A.1

Summary of Criticality Benchmark Calculations

	Reference	Identification	Enrich.	Calculated k_{eff}		EALF † (eV)	
				MCNP4a	KENO5a	MCNP4a	KENO5a
37	PNL-3926 (6A.12)	Lead Reflector, 0 cm sepn.	4.306	NC	1.0003 ± 0.0007	NC	0.3159
38	PNL-3926 (6A.12)	Lead Reflector, 0.55 cm sepn.	4.306	1.0025 ± 0.0011	0.9997 ± 0.0007	0.3030	0.3044
39	PNL-3926 (6A.12)	Lead Reflector, 1.956 cm sepn.	4.306	1.0000 ± 0.0012	0.9985 ± 0.0007	0.2883	0.2930
40	PNL-3926 (6A.12)	Lead Reflector, 5.405 cm sepn.	4.306	0.9971 ± 0.0012	0.9946 ± 0.0007	0.2831	0.2854
41	PNL-2615 (6A.13)	Experiment 004/032 - no absorber	4.306	0.9925 ± 0.0012	0.9950 ± 0.0007	0.1155	0.1159
42	PNL-2615 (6A.13)	Experiment 030 - Zr plates	4.306	NC	0.9971 ± 0.0007	NC	0.1154
43	PNL-2615 (6A.13)	Experiment 013 - Steel plates	4.306	NC	0.9965 ± 0.0007	NC	0.1164
44	PNL-2615 (6A.13)	Experiment 014 - Steel plates	4.306	NC	0.9972 ± 0.0007	NC	0.1164
45	PNL-2615 (6A.13)	Exp. 009 1.05% Boron-Steel plates	4.306	0.9982 ± 0.0010	0.9981 ± 0.0007	0.1172	0.1162
46	PNL-2615 (6A.13)	Exp. 012 1.62% Boron-Steel plates	4.306	0.9996 ± 0.0012	0.9982 ± 0.0007	0.1161	0.1173
47	PNL-2615 (6A.13)	Exp. 031 - Boral plates	4.306	0.9994 ± 0.0012	0.9969 ± 0.0007	0.1165	0.1171
48	PNL-7167 (6A.14)	Experiment 214R - with flux trap	4.306	0.9991 ± 0.0011	0.9956 ± 0.0007	0.3722	0.3812

Table 6.A.1

Summary of Criticality Benchmark Calculations

	Reference	Identification	Enrich.	Calculated k_{eff}		EALF † (eV)	
				MCNP4a	KENO5a	MCNP4a	KENO5a
49	PNL-7167 (6A.14)	Experiment 214V3 - with flux trap	4.306	0.9969 ± 0.0011	0.9963 ± 0.0007	0.3742	0.3826
50	PNL-4267 (6A.15)	Case 173 - 0 ppm B	4.306	0.9974 ± 0.0012	NC	0.2893	NC
51	PNL-4267 (6A.15)	Case 177 - 2550 ppm B	4.306	1.0057 ± 0.0010	NC	0.5509	NC
52	PNL-5803 (6A.16)	MOX Fuel - Type 3.2 Exp. 21	20% Pu	1.0041 ± 0.0011	1.0046 ± 0.0006	0.9171	0.8868
53	PNL-5803 (6A.16)	MOX Fuel - Type 3.2 Exp. 43	20% Pu	1.0058 ± 0.0012	1.0036 ± 0.0006	0.2968	0.2944
54	PNL-5803 (6A.16)	MOX Fuel - Type 3.2 Exp. 13	20% Pu	1.0083 ± 0.0011	0.9989 ± 0.0006	0.1665	0.1706
55	PNL-5803 (6A.16)	MOX Fuel - Type 3.2 Exp. 32	20% Pu	1.0079 ± 0.0011	0.9966 ± 0.0006	0.1139	0.1165
56	WCAP-3385 (6A.17)	Saxton Case 52 PuO2 0.52" pitch	6.6% Pu	0.9996 ± 0.0011	1.0005 ± 0.0006	0.8665	0.8417
57	WCAP-3385 (6A.17)	Saxton Case 52 U 0.52" pitch	5.74	1.0000 ± 0.0010	0.9956 ± 0.0007	0.4476	0.4580
58	WCAP-3385 (6A.17)	Saxton Case 56 PuO2 0.56" pitch	6.6% Pu	1.0036 ± 0.0011	1.0047 ± 0.0006	0.5289	0.5197
59	WCAP-3385 (6A.17)	Saxton Case 56 borated PuO2	6.6% Pu	1.0008 ± 0.0010	NC	0.6389	NC
60	WCAP-3385 (6A.17)	Saxton Case 56 U 0.56" pitch	5.74	0.9994 ± 0.0011	0.9967 ± 0.0007	0.2923	0.2954

Table 6.A.1

Summary of Criticality Benchmark Calculations

	Reference	Identification	Enrich.	Calculated k_{eff}		EALF † (eV)	
				MCNP4a	KENO5a	MCNP4a	KENO5a
61	WCAP-3385 (6A.17)	Saxton Case 79 PuO2 0.79" pitch	6.6% Pu	1.0063 ± 0.0011	1.0133 ± 0.0006	0.1520	0.1555
62	WCAP-3385 (6A.17)	Saxton Case 79 U 0.79" pitch	5.74	1.0039 ± 0.0011	1.0008 ± 0.0006	0.1036	0.1047

Notes: NC stands for not calculated.

† EALF is the energy of the average lethargy causing fission.

†† These experimental results appear to be statistical outliers ($>3\sigma$) suggesting the possibility of unusually large experimental error. Although they could justifiably be excluded, for conservatism, they were retained in determining the calculational basis.

Table 6.A.2

COMPARISON OF MCNP4a AND KENO5a CALCULATED REACTIVITIES†
FOR VARIOUS ENRICHMENTS

Enrichment	Calculated $k_{eff} \pm 1\sigma$	
	MCNP4a	**KENO5a**
3.0	0.8465 ± 0.0011	0.8478 ± 0.0004
3.5	0.8820 ± 0.0011	0.8841 ± 0.0004
3.75	0.9019 ± 0.0011	0.8987 ± 0.0004
4.0	0.9132 ± 0.0010	0.9140 ± 0.0004
4.2	0.9276 ± 0.0011	0.9237 ± 0.0004
4.5	0.9400 ± 0.0011	0.9388 ± 0.0004

† Based on the MPC-68 with the GE 8x8R.

Table 6.A.3

MCNP4a CALCULATED REACTIVITIES FOR
CRITICAL EXPERIMENTS WITH NEUTRON ABSORBERS

Ref.	Experiment		Δk Worth of Absorber	MCNP4a Calculated k_{eff}	EALF† (eV)
6.A.13	PNL-2615	Boral Sheet	0.0139	0.9994±0.0012	0.1165
6.A.7	BAW-1484	Core XX	0.0165	1.0008±0.0011	0.1724
6.A.13	PNL-2615	1.62% Boron-steel	0.0165	0.9996±0.0012	0.1161
6.A.7	BAW-1484	Core XIX	0.0202	0.9961±0.0012	0.2103
6.A.7	BAW-1484	Core XXI	0.0243	0.9994±0.0010	0.1544
6.A.7	BAW-1484	Core XVII	0.0519	0.9962±0.0012	0.2083
6.A.11	PNL-3602	Boral Sheet	0.0708	0.9941±0.0011	0.3135
6.A.7	BAW-1484	Core XV	0.0786	0.9910±0.0011	0.2092
6.A.7	BAW-1484	Core XVI	0.0845	0.9935±0.0010	0.1757
6.A.7	BAW-1484	Core XIV	0.1575	0.9953±0.0011	0.2022
6.A.7	BAW-1484	Core XIII	0.1738	1.0020±0.0011	0.1988
6.A.14	PNL-7167	Expt 214R flux trap	0.1931	0.9991±0.0011	0.3722

† EALF is the energy of the average lethargy causing fission.

Table 6.A.4

COMPARISON OF MCNP4a AND KENO5a
CALCULATED REACTIVITIES† FOR VARIOUS ^{10}B LOADINGS

^{10}B, g/cm^2	**Calculated $k_{eff} \pm 1\sigma$**	
	MCNP4a	**KENO5a**
0.005	1.0381 ± 0.0012	1.0340 ± 0.0004
0.010	0.9960 ± 0.0010	0.9941 ± 0.0004
0.015	0.9727 ± 0.0009	0.9713 ± 0.0004
0.020	0.9541 ± 0.0012	0.9560 ± 0.0004
0.025	0.9433 ± 0.0011	0.9428 ± 0.0004
0.03	0.9325 ± 0.0011	0.9338 ± 0.0004
0.035	0.9234 ± 0.0011	0.9251 ± 0.0004
0.04	0.9173 ± 0.0011	0.9179 ± 0.0004

† Based on 4.5% enrichment GE 8x8R in the MPC-68 cask.

Table 6.A.5

CALCULATIONS FOR CRITICAL EXPERIMENTS WITH THICK LEAD AND STEEL REFLECTORS†

Ref.	Case	Enrichment, wt%	Separation, cm	MCNP4a k_{eff}	KENO5a k_{eff}
6.A.11	Steel Reflector	2.35	1.321	0.9980±0.0009	0.9992±0.0006
		2.35	2.616	0.9968±0.0009	0.9964±0.0006
		2.35	3.912	0.9974±0.0010	0.9980±0.0006
		2.35	∞	0.9962±0.0008	0.9939±0.0006
6.A.11	Steel Reflector	4.306	1.321	0.9997±0.0010	1.0012±0.0007
		4.306	2.616	0.9994±0.0012	0.9974±0.0007
		4.306	3.405	0.9969±0.0011	0.9951±0.0007
		4.306	∞	0.9910±0.0020	0.9947±0.0007
6.A.12	Lead Reflector	4.306	0.55	1.0025±0.0011	0.9997±0.0007
		4.306	1.956	1.0000±0.0012	0.9985±0.0007
		4.306	5.405	0.9971±0.0012	0.9946±0.0007

† Arranged in order of increasing reflector-fuel spacing.

Table 6.A.6

CALCULATIONS FOR CRITICAL EXPERIMENTS WITH VARIOUS SOLUBLE BORON CONCENTRATIONS

Reference	***Experiment***	***Boron Concentration, ppm***	***Calculated k_{eff}***	
			MCNP4a	***KENO5a***
6.A.15	*PNL-4267*	*0*	*0.9974 ± 0.0012*	-
6.A.8	*BAW-1645-4*	*886*	*0.9970 ± 0.0010*	*0.9924 ± 0.0006*
6.A.9	*BAW-1810*	*1337*	*1.0023 ± 0.0010*	-
6.A.9	*BAW-1810*	*1899*	*1.0060 ± 0.0009*	-
6.A.15	*PNL-4267*	*2550*	*1.0057 ± 0.0010*	-

Table 6.A.7

CALCULATIONS FOR CRITICAL EXPERIMENTS WITH MOX FUEL

Reference	Case†	MCNP4a		KENO5a	
		k_{eff}	EALF (eV)††	k_{eff}	EALF†† (eV)
PNL-5803 [6.A.16]	MOX Fuel - Exp. No. 21	1.0041±0.0011	0.9171	1.0046±0.0006	0.8868
	MOX Fuel - Exp. No. 43	1.0058±0.0012	0.2968	1.0036±0.0006	0.2944
	MOX Fuel - Exp. No. 13	1.0083±0.0011	0.1665	0.9989±0.0006	0.1706
	MOX Fuel - Exp. No. 32	1.0079±0.0011	0.1139	0.9966±0.0006	0.1165
WCAP-3385-54 [6.A.17]	Saxton @ 0.52" pitch	0.9996±0.0011	0.8665	1.0005±0.0006	0.8417
	Saxton @ 0.56" pitch	1.0036±0.0011	0.5289	1.0047±0.0006	0.5197
	Saxton @ 0.56" pitch borated	1.0008±0.0010	0.6389	NC	NC
	Saxton @ 0.79" pitch	1.0063±0.0011	0.1520	1.0133±0.0006	0.1555

† Arranged in order of increasing lattice spacing.

†† EALF is the energy of the average lethargy causing fission.

APPENDIX 6.C: CALCULATIONAL SUMMARY

The following table lists the maximum k_{eff} (including bias, uncertainties, and calculational statistics), MCNP calculated k_{eff}, standard deviation, and energy of average lethargy causing fission (EALF) for each of the candidate fuel types and basket configurations.

Table 6.C.1
CALCULATIONAL SUMMARY FOR ALL CANDIDATE FUEL TYPES AND BASKET CONFIGURATIONS

MPC-24					
Fuel Assembly Designation	**Cask**	**Maximum k_{eff}**	**Calculated k_{eff}**	**Std. Dev. (1-sigma)**	**EALF (eV)**
14x14A01	HI-STAR	0.9378	0.9332	0.0010	0.2147
14x14A02	HI-STAR	0.9374	0.9328	0.0009	0.2137
14x14A03	HI-STORM	0.2938	0.2905	0.0003	4.73E+04
14x14A03	HI-TRAC	0.9365	0.9322	0.0008	0.2144
14x14A03	HI-STAR	0.9383	0.9340	0.0008	0.2125
14x14B01	HI-STAR	0.9268	0.9225	0.0008	0.2788
14x14B02	HI-STAR	0.9243	0.9200	0.0008	0.2398
14x14B03	HI-STAR	0.9196	0.9152	0.0009	0.2598
14x14B04	HI-STAR	0.9163	0.9118	0.0009	0.2631
B14x14B01	HI-TRAC	0.9313	0.9270	0.0008	0.2735
B14x14B01	HI-STAR	0.9323	0.9280	0.0008	0.2730
14x14C01	HI-TRAC	0.9360	0.9318	0.0007	0.2819
14x14C01	HI-STAR	0.9361	0.9317	0.0009	0.2821
14x14C02	HI-STAR	0.9355	0.9312	0.0008	0.2842
14x14C03	*HI-TRAC*	*0.9395*	*0.9351*	*0.0008*	*0.2898*
14x14C03	*HI-STAR*	*0.9400*	*0.9357*	*0.0008*	*0.2900*

Table 6.C.1 (continued)
CALCULATIONAL SUMMARY FOR ALL CANDIDATE FUEL TYPES
AND BASKET CONFIGURATIONS

MPC-24					
Fuel Assembly Designation	**Cask**	**Maximum k_{eff}**	**Calculated k_{eff}**	**Std. Dev. (1-sigma)**	**EALF (eV)**
14x14D01	HI-TRAC	0.8583	0.8542	0.0007	0.3425
14x14D01	HI-STAR	0.8576	0.8536	0.0007	0.3414
14x14E01	*HI-STAR*	*0.7663*	*0.7618*	*0.0009*	*0.3996*
14x14E02	*HI-TRAC*	*0.7702*	*0.7661*	*0.0007*	*0.3611*
14x14E02	*HI-STAR*	*0.7715*	*0.7671*	*0.0008*	*0.3633*
14x14E03	*HI-STAR*	*0.7016*	*0.6977*	*0.0006*	*0.2896*
15x15A01	HI-TRAC	0.9292	0.9249	0.0008	0.2683
15x15A01	HI-STAR	0.9301	0.9259	0.0008	0.2660
15x15B01	HI-STAR	0.9427	0.9384	0.0008	0.2704
15C15B02	HI-STAR	0.9441	0.9396	0.0009	0.2711
15x15B03	HI-STAR	0.9462	0.9420	0.0008	0.2708
15x15B04	HI-STAR	0.9452	0.9407	0.0009	0.2692
15x15B05	HI-TRAC	0.9467	0.9423	0.0009	0.2689
15x15B05	HI-STAR	0.9473	0.9431	0.0008	0.2693
15x15B06	HI-STAR	0.9448	0.9404	0.0008	0.2732
B15x15B01	HI-STAR	0.9471	0.9428	0.0008	0.2722
15x15C01	HI-STAR	0.9332	0.9290	0.0007	0.2563
15x15C02	HI-STAR	0.9373	0.9330	0.0008	0.2536
15x15C03	HI-STAR	0.9377	0.9335	0.0007	0.2525
15x15C04	HI-STAR	0.9378	0.9338	0.0007	0.2499
B15x15C01	HI-TRAC	0.9448	0.9405	0.0008	0.2452
B15x15C01	HI-STAR	0.9444	0.9401	0.0008	0.2456

Table 6.C.1 (continued)
CALCULATIONAL SUMMARY FOR ALL CANDIDATE FUEL TYPES
AND BASKET CONFIGURATIONS

MPC-24					
Fuel Assembly Designation	**Cask**	**Maximum k_{eff}**	**Calculated k_{eff}**	**Std. Dev. (1-sigma)**	**EALF (eV)**
15x15D01	HI-STAR	0.9423	0.9380	0.0008	0.2916
15x15D02	HI-STAR	0.9430	0.9386	0.0009	0.2900
15x15D03	HI-STAR	0.9419	0.9375	0.0009	0.2966
15x15D04	HI-TRAC	0.9447	0.9404	0.0008	0.3053
15x15D04	HI-STAR	0.9440	0.9398	0.0007	0.3052
15x15E01	HI-TRAC	0.9474	0.9432	0.0007	0.2916
15x15E01	HI-STAR	0.9475	0.9433	0.0007	0.2916
15x15F01	HI-STORM	0.3416	0.3383	0.0003	5.70E+04
15x15F01	HI-TRAC	0.9468	0.9426	0.0008	0.3036
15x15F01	HI-STAR	0.9478	0.9436	0.0008	0.3006
15x15G01	HI-TRAC	0.8972	0.8929	0.0008	0.3470
15x15G01	HI-STAR	0.8986	0.8943	0.0008	0.3459
15x15H01	*HI-TRAC*	*0.9411*	*0.9369*	*0.0008*	*0.2418*
15x15H01	*HI-STAR*	*0.9411*	*0.9368*	*0.0008*	*0.2425*
16x16A01	HI-STORM	0.3273	0.3239	0.0003	5.16E+04
16x16A01	HI-TRAC	0.9363	0.9318	0.0009	0.2796
16x16A01	HI-STAR	0.9383	0.9339	0.0009	0.2786
16x16A02	HI-STAR	0.9371	0.9328	0.0008	0.2768
17x17A01	HI-STAR	0.9449	0.9400	0.0011	0.2198
17x17A02	HI-STORM	0.3082	0.3050	0.0003	5.04E+04
17x17A02	HI-TRAC	0.9433	0.9390	0.0008	0.2205
17x17A02	HI-STAR	0.9452	0.9408	0.0008	0.2~~205~~*197*

Table 6.C.1 (continued)
CALCULATIONAL SUMMARY FOR ALL CANDIDATE FUEL TYPES
AND BASKET CONFIGURATIONS

MPC-24					
Fuel Assembly Designation	**Cask**	**Maximum k_{eff}**	**Calculated k_{eff}**	**Std. Dev. (1-sigma)**	**EALF (eV)**
17x17A03	HI-STAR	0.9406	0.9364	0.0008	0.2082
17x17B01	HI-STAR	0.9377	0.9335	0.0008	0.2697
17x17B02	HI-STAR	0.9379	0.9337	0.0008	0.2710
17x17B03	HI-STAR	0.9330	0.9288	0.0008	0.2714
17x17B04	HI-STAR	0.9407	0.9365	0.0007	0.2666
17x17B05	HI-STAR	0.9349	0.9305	0.0009	0.2629
17x17B06	HI-TRAC	0.9412	0.9369	0.0008	0.2658
17x17B06	HI-STAR	0.9436	0.9393	0.0008	0.2657
17x17C01	HI-STAR	0.9383	0.9339	0.0008	0.2683
17x17C02	HI-TRAC	0.9421	0.9380	0.0007	0.2704
17x17C02	HI-STAR	0.9427	0.9384	0.0008	0.2703

Table 6.C.1 (continued)
CALCULATIONAL SUMMARY FOR ALL CANDIDATE FUEL TYPES
AND BASKET CONFIGURATIONS

MPC-68					
Fuel Assembly Designation	**Cask**	**Maximum k_{eff}**	**Calculated k_{eff}**	**Std. Dev. (1-sigma)**	**EALF (eV)**
6x6A01	HI-STAR	0.7539	0.7498	0.0007	0.2754
6x6A02	HI-STAR	0.7517	0.7476	0.0007	0.2510
6x6A03	HI-STAR	0.7545	0.7501	0.0008	0.2494
6x6A04	HI-STAR	0.7537	0.7494	0.0008	0.2494
6x6A05	*HI-STAR*	*0.7555*	*0.7512*	*0.0008*	*0.2470*
6x6A06	*HI-STAR*	*0.7618*	*0.7576*	*0.0008*	*0.2298*
6x6A07	*HI-STAR*	*0.7588*	*0.7550*	*0.0005*	*0.2360*
6x6A08	*HI-STAR*	*0.7808*	*0.7766*	*0.0007*	*0.2527*
B6x6A01	HI-TRAC	0.7732~~599~~	0.7691~~556~~	0.0007~~8~~	0.2458~~668~~
B6x6A01	HI-STAR	0.7727~~602~~	0.7685~~562~~	0.0007~~6~~	0.2460~~677~~
B6x6A02	*HI-TRAC*	*0.7785*	*0.7741*	*0.0008*	*0.2411*
B6x6A02	*HI-STAR*	*0.7782*	*0.7738*	*0.0008*	*0.2408*
B6x6A03	*HI-TRAC*	*0.7886*	*0.7846*	*0.0007*	*0.2311*
B6x6A03	*HI-STAR*	*0.7888*	*0.7846*	*0.0007*	*0.2310*
6x6B01	HI-STAR	0.7604~~598~~	0.756~~355~~	0.0007~~8~~	0.2461~~3~~
6x6B02	HI-STAR	0.7618~~09~~	0.7577~~67~~	0.0007	0.2450~~61~~
6x6B03	*HI-STAR*	*0.7619*	*0.7578*	*0.0007*	*0.2439*
6x6B04	*HI-STAR*	*0.7686*	*0.7644*	*0.0008*	*0.2286*
6x6B05	*HI-STAR*	*0.7824*	*0.7785*	*0.0006*	*0.2184*
B6x6B01	HI-TRAC	0.7833~~625~~	0.7794~~583~~	0.0006~~8~~	0.2181~~454~~
B6x6B01	HI-STAR	0.7822~~611~~	0.7783~~570~~	0.0006~~7~~	0.2190~~442~~

Table 6.C.1 (continued)
CALCULATIONAL SUMMARY FOR ALL CANDIDATE FUEL TYPES
AND BASKET CONFIGURATIONS

MPC-68					
Fuel Assembly Designation	**Cask**	**Maximum k_{eff}**	**Calculated k_{eff}**	**Std. Dev. (1-sigma)**	**EALF (eV)**
6x6C01	HI-STORM	0.2759	0.2726	0.0003	1.59E+04
6x6C01	HI-TRAC	0.8024	0.7982	0.0008	0.2135
6x6C01	HI-STAR	0.8021	0.7980	0.0007	0.2139
7x7A01	HI-TRAC	0.796~~356~~	0.7922~~15~~	0.0007	0.201~~631~~
7x7A01	HI-STAR	0.7974~~3~~	0.7932~~0~~	0.0008	0.2015
7x7B01	HI-STAR	0.9372	0.9330	0.0007	0.3658
7x7B02	HI-STAR	0.9301	0.9260	0.0007	0.3524
7x7B03	HI-STAR	0.9313	0.9271	0.0008	0.3438
7x7B04	HI-STAR	0.9311	0.9270	0.0007	0.3816
7x7B05	HI-STAR	0.9350	0.9306	0.0008	0.3382
7x7B06	*HI-STAR*	*0.9298*	*0.9260*	*0.0006*	*0.3957*
~~B7x7B01~~	~~HI-STORM~~	~~0.3826~~	~~0.3792~~	~~0.0003~~	~~2.52E+04~~
B7x7B01	HI-TRAC	0.936~~780~~	0.932~~435~~	0.0008~~9~~	0.389~~9789~~
B7x7B01	HI-STAR	0.9375~~8~~	0.9332~~5~~	0.0008	0.3887~~794~~
B7x7B02	*HI-STORM*	*0.4061*	*0.4027*	*0.0003*	*2.069E+04*
B7x7B02	*HI-TRAC*	*0.9385*	*0.9342*	*0.0008*	*0.3952*
B7x7B02	HI-STAR	0.938~~675~~	0.934~~432~~	0.0007~~8~~	0.398~~3839~~
8x8A01	HI-TRAC	0.7662	0.7620	0.0008	0.2250
8x8A01	HI-STAR	0.7685	0.7644	0.0007	0.2227
8x8A02	*HI-TRAC*	*0.7690*	*0.7650*	*0.0007*	*0.2163*
8x8A02	*HI-STAR*	*0.7697*	*0.7656*	*0.0007*	*0.2158*
8x8B01	HI-STAR	0.9310	0.9265	0.0009	0.2935

Table 6.C.1 (continued)
CALCULATIONAL SUMMARY FOR ALL CANDIDATE FUEL TYPES
AND BASKET CONFIGURATIONS

MPC-68					
Fuel Assembly Designation	**Cask**	**Maximum k_{eff}**	**Calculated k_{eff}**	**Std. Dev. (1-sigma)**	**EALF (eV)**
8x8B02	HI-STAR	0.9227	0.9185	0.0007	0.2993
8x8B03	HI-STAR	0.9299	0.9257	0.0008	0.3319
8x8B04	*HI-STAR*	*0.9236*	*0.9194*	*0.0008*	*0.3700*
B8x8B01	*HI-TRAC*	*0.9352*	*0.9310*	*0.0008*	*0.3393*
B8x8B01	HI-STAR	0.934~~617~~	0.9301~~274~~	0.0009~~8~~	0.338~~919~~
B8x8B02	*HI-TRAC*	*0.9401*	*0.9359*	*0.0007*	*0.3331*
B8x8B02	HI-STAR	0.938~~557~~	0.934~~315~~	0.0008	0.3329~~245~~
B8x8B03	*HI-STORM*	*0.3934*	*0.3900*	*0.0004*	*1.815E+04*
B8x8B03	HI-TRAC	0.9427~~375~~	0.938~~532~~	0.0008	0.3278~~43~~
B8x8B03	HI-STAR	0.9416~~368~~	0.9375~~27~~	0.0007	0.3293~~31~~
8x8C01	HI-STAR	0.9315	0.9273	0.0007	0.2822
8x8C02	HI-STAR	0.9313	0.9268	0.0009	0.2716
8x8C03	HI-STAR	0.9329	0.9286	0.0008	0.2877
8x8C04	HI-STAR	0.9348	0.9307	0.0007	0.2915
8x8C05	HI-STAR	0.9353	0.9312	0.0007	0.2971
8x8C06	HI-STAR	0.9353	0.9312	0.0007	0.2944
8x8C07	HI-STAR	0.9314	0.9273	0.0007	0.2972
8x8C08	HI-STAR	0.9339	0.9298	0.0007	0.2915
8x8C09	HI-STAR	0.9301	0.9260	0.0007	0.3183
8x8C10	HI-STAR	0.9317	0.9275	0.0008	0.3018
8x8C11	HI-STAR	0.9328	0.9287	0.0007	0.3001
8x8C12	HI-STAR	0.9285	0.9242	0.0008	0.3062

Table 6.C.1 (continued)
CALCULATIONAL SUMMARY FOR ALL CANDIDATE FUEL TYPES
AND BASKET CONFIGURATIONS

MPC-68					
Fuel Assembly Designation	**Cask**	**Maximum k_{eff}**	**Calculated k_{eff}**	**Std. Dev. (1-sigma)**	**EALF (eV)**
B8x8C01	*HI-TRAC*	*0.9348*	*0.9305*	*0.0008*	*0.3114*
B8x8C01	HI-STAR	0.9357	0.9313	0.0009	0.3141
B8x8C02	HI-STORM	0.3714	0.3679	0.0004	2.30E+04
B8x8C02	HI-TRAC	0.9402	0.9360	0.0008	0.3072
B8x8C02	HI-STAR	0.9425	0.9384	0.0007	0.3081
B8x8C03	*HI-TRAC*	*0.9429*	*0.9386*	*0.0008*	*0.3045*
B8x8C03	HI-STAR	0.9418	0.9375	0.0008	0.3056
8x8D01	HI-STAR	0.9342	0.9302	0.0006	0.2733
8x8D02	HI-STAR	0.9325	0.9284	0.0007	0.2750
8x8D03	HI-STAR	0.9351	0.9309	0.0008	0.2731
8x8D04	HI-STAR	0.9338	0.9296	0.0007	0.2727
8x8D05	HI-STAR	0.9339	0.9294	0.0009	0.2700
8x8D06	HI-STAR	0.9365	0.9324	0.0007	0.2777
8x8D07	HI-STAR	0.9341	0.9297	0.0009	0.2694
8x8D08	*HI-STAR*	*0.9376*	*0.9332*	*0.0009*	*0.2841*
B8x8D01	HI-TRAC	0.9408~~360~~	0.9368~~17~~	0.0006~~8~~	0.2773~~4~~
B8x8D01	HI-STAR	0.9403~~366~~	0.9363~~23~~	0.0007~~8~~	0.2778~~40~~
8x8E01	HI-TRAC	0.9309	0.9266	0.0008	0.2834
8x8E01	HI-STAR	0.9312	0.9270	0.0008	0.2831
8x8F01	*HI-TRAC*	*0.9396*	*0.9356*	*0.0006*	*0.2255*
8x8F01	*HI-STAR*	*0.9411*	*0.9366*	*0.0009*	*0.2264*
9x9A01	HI-STAR	0.9353	0.9310	0.0008	0.2875

Table 6.C.1 (continued)
CALCULATIONAL SUMMARY FOR ALL CANDIDATE FUEL TYPES
AND BASKET CONFIGURATIONS

MPC-68					
Fuel Assembly Designation	**Cask**	**Maximum k_{eff}**	**Calculated k_{eff}**	**Std. Dev. (1-sigma)**	**EALF (eV)**
9x9A02	HI-STAR	0.9388	0.9345	0.0008	0.2228
9x9A03	HI-STAR	0.9351	0.9310	0.0007	0.2837
9x9A04	HI-STAR	0.9396	0.9355	0.0007	0.2262
B9x9A01	HI-STORM	0.3365	0.3331	0.0003	1.78E+04
B9x9A01	HI-TRAC	0.9434	0.9392	0.0007	0.2232
B9x9A01	HI-STAR	0.9417	0.9374	0.0008	0.2236
9x9B01	HI-STAR	0.936~~8~~80	0.932~~6~~36	0.0007~~8~~8	0.256~~1~~76
9x9B02	HI-STAR	0.9377~~3~~	0.933~~4~~29	0.0008~~9~~9	0.254~~7~~78
9x9B03	*HI-STAR*	*0.9417*	*0.9374*	*0.0008*	*0.2545*
B9x9B01	HI-TRAC	0.9417~~6~~	0.9376~~4~~	0.0007~~8~~8	0.250~~4~~92
B9x9B01	HI-STAR	0.943~~6~~388	0.939~~4~~46	0.0007~~8~~8	0.250~~6~~30
9x9C01	HI-TRAC	0.9377	0.9335	0.0008	0.2697
9x9C01	HI-STAR	0.9395	0.9352	0.0008	0.2698
9x9D01	HI-TRAC	0.9387~~1~~	0.934~~3~~38	0.0008	0.263~~5~~25
9x9D01	HI-STAR	0.9394~~2~~	0.935~~0~~49	0.0009~~8~~8	0.2625~~8~~
~~9x9E01~~	~~HI-TRAC~~	~~0.9403~~	~~0.9360~~	~~0.0008~~	~~0.2291~~
9x9E01	HI-STAR	0.933~~4~~406	0.929~~3~~362	0.0007~~8~~8	0.222~~7~~83
9x9E02	*HI-STORM*	*0.3676*	*0.3642*	*0.0003*	*2.409E+04*
9x9E02	*HI-TRAC*	*0.9402*	*0.9360*	*0.0008*	*0.2075*
9x9E02	*HI-STAR*	*0.9401*	*0.9359*	*0.0008*	*0.2065*
~~9x9F01~~	~~HI-TRAC~~	~~0.9366~~	~~0.9325~~	~~0.0007~~	~~0.3029~~
9x9F01	HI-STAR	0.930~~7~~77	0.926~~5~~335	0.0007	0.2899~~3028~~

Table 6.C.1 (continued)
CALCULATIONAL SUMMARY FOR ALL CANDIDATE FUEL TYPES
AND BASKET CONFIGURATIONS

MPC-68					
Fuel Assembly Designation	**Cask**	**Maximum k_{eff}**	**Calculated k_{eff}**	**Std. Dev. (1-sigma)**	**EALF (eV)**
9x9F02	*HI-STORM*	*0.3676*	*0.3642*	*0.0003*	*2.409E+04*
9x9F02	*HI-TRAC*	*0.9402*	*0.9360*	*0.0008*	*0.2075*
9x9F02	*HI-STAR*	*0.9401*	*0.9359*	*0.0008*	*0.2065*
9x9G01	*HI-TRAC*	*0.9307*	*0.9265*	*0.0007*	*0.2193*
9x9G01	*HI-STAR*	*0.9309*	*0.9265*	*0.0008*	*0.2191*
10x10A01	HI-STAR	0.9377	0.9335	0.0008	0.3170
10x10A02	HI-STAR	0.9426	0.9386	0.0007	0.2159
10x10A03	HI-STAR	0.9396	0.9356	0.0007	0.3169
B10x10A01	HI-STORM	0.3379	0.3345	0.0003	1.74E+04
B10x10A01	HI-TRAC	0.9448	0.9405	0.0008	0.2214
B10x10A01	HI-STAR	0.9457	0.9414	0.0008	0.2212
10x10B01	HI-STAR	0.9384	0.9341	0.0008	0.2881
10x10B02	HI-STAR	0.9416	0.9373	0.0008	0.2333
10x10B03	HI-STAR	0.9375	0.9334	0.0007	0.2856
B10x10B01	HI-TRAC	0.9443	0.9401	0.0007	0.2380
B10x10B01	HI-STAR	0.9436	0.9395	0.0007	0.2366
10x10C01	HI-TRAC	*0.9430~~0.9002~~*	*0.9387~~0.8961~~*	*0.0008~~0.0007~~*	*0.2424~~0.2627~~*
10x10C01	HI-STAR	*0.9433~~8990~~*	*0.9392~~8949~~*	0.0007	*0.244~~6656~~*
10x10D01	HI-TRAC	0.9383	0.9343	0.0007	0.3359
10x10D01	HI-STAR	0.9376	0.9333	0.0008	0.3355
10x10E01	HI-TRAC	0.9157	0.9116	0.0007	0.3301
10x10E01	HI-STAR	0.9185	0.9144	0.0007	0.2936

Table 6.C.1 (continued)
CALCULATIONAL SUMMARY FOR ALL CANDIDATE FUEL TYPES
AND BASKET CONFIGURATIONS

MPC-24 400PPM SOLUBLE BORON					
Fuel Assembly Designation	***Cask***	***Maximum k_{eff}***	***Calculated k_{eff}***	***Std. Dev. (1-sigma)***	***EALF (eV)***
14x14A03	*HI-STAR*	*0.8986*	*0.8943*	*0.0008*	*0.2541*
B14x14B01	*HI-STAR*	*0.8977*	*0.8934*	*0.0008*	*0.3287*
14x14C01	*HI-STAR*	*0.9042*	*0.8999*	*0.0008*	*0.3516*
14x14D01	*HI-STAR*	*0.8627*	*0.8586*	*0.0007*	*0.4471*
14x14E02	*HI-STAR*	*0.7176*	*0.7134*	*0.0008*	*0.4380*
15x15A01	*HI-STAR*	*0.9209*	*0.9165*	*0.0008*	*0.3449*
B15x15B01	*HI-STAR*	*0.9362*	*0.9318*	*0.0008*	*0.3519*
B15x15C01	*HI-STAR*	*0.9351*	*0.9305*	*0.0009*	*0.3166*
15x15D04	*HI-STAR*	*0.9352*	*0.9308*	*0.0009*	*0.3975*
15x15E01	*HI-STAR*	*0.9388*	*0.9343*	*0.0009*	*0.3785*
15x15F01	*HI-STORM (DRY)*	*0.4111*	*0.4077*	*0.0004*	*2.208E+04*
15x15F01	*HI-TRAC*	*0.9410*	*0.9365*	*0.0009*	*0.3924*
15x15F01	*HI-STAR*	*0.9402*	*0.9359*	*0.0008*	*0.3933*
15x15G01	*HI-STAR*	*0.9022*	*0.8979*	*0.0008*	*0.4528*
15x15H01	*HI-TRAC*	*0.9447*	*0.9403*	*0.0008*	*0.3291*
15x15H01	*HI-STAR*	*0.9447*	*0.9404*	*0.0008*	*0.3300*
16x16A01	*HI-STAR*	*0.9058*	*0.9016*	*0.0008*	*0.3331*
17x17A02	*HI-STAR*	*0.9371*	*0.9328*	*0.0008*	*0.2866*
17x17B06	*HI-STAR*	*0.9372*	*0.9331*	*0.0007*	*0.3516*
17x17C02	*HI-TRAC*	*0.9385*	*0.9341*	*0.0008*	*0.3574*
17x17C02	*HI-STAR*	*0.9386*	*0.9344*	*0.0007*	*0.3560*

Table 6.C.1 (continued)
CALCULATIONAL SUMMARY FOR ALL CANDIDATE FUEL TYPES
AND BASKET CONFIGURATIONS

MPC-24E/MPC-24EF, UNBORATED WATER					
Fuel Assembly Designation	***Cask***	***Maximum k_{eff}***	***Calculated k_{eff}***	***Std. Dev. (1-sigma)***	***EALF (eV)***
14x14A03	*HI-STAR*	*0.9380*	*0.9337*	*0.0008*	*0.2277*
B14x14B01	*HI-STAR*	*0.9312*	*0.9269*	*0.0008*	*0.2927*
14x14C01	*HI-STAR*	*0.9356*	*0.9311*	*0.0009*	*0.3161*
14x14D01	*HI-STAR*	*0.8875*	*0.8830*	*0.0009*	*0.4026*
14x14E02	*HI-STAR*	*0.7651*	*0.7610*	*0.0007*	*0.3645*
15x15A01	*HI-STAR*	*0.9336*	*0.9292*	*0.0008*	*0.2879*
B15x15B01	*HI-STAR*	*0.9465*	*0.9421*	*0.0008*	*0.2924*
B15x15C01	*HI-STAR*	*0.9462*	*0.9419*	*0.0008*	*0.2631*
15x15D04	*HI-STAR*	*0.9440*	*0.9395*	*0.0009*	*0.3316*
15x15E01	*HI-STAR*	*0.9455*	*0.9411*	*0.0009*	*0.3178*
15x15F01	*HI-STORM (DRY)*	*0.3699*	*0.3665*	*0.0004*	*3.280e+04*
15x15F01	*HI-TRAC*	*0.9465*	*0.9421*	*0.0009*	*0.3297*
15x15F01	*HI-STAR*	*0.9468*	*0.9424*	*0.0008*	*0.3270*
15x15G01	*HI-STAR*	*0.9054*	*0.9012*	*0.0007*	*0.3781*
15x15H01	*HI-STAR*	*0.9423*	*0.9381*	*0.0008*	*0.2628*
16x16A01	*HI-STAR*	*0.9341*	*0.9297*	*0.0009*	*0.3019*
17x17A02	*HI-TRAC*	*0.9467*	*0.9425*	*0.0008*	*0.2372*
17x17A02	*HI-STAR*	*0.9447*	*0.9406*	*0.0007*	*0.2374*
17x17B06	*HI-STAR*	*0.9421*	*0.9377*	*0.0008*	*0.2888*
17x17C02	*HI-STAR*	*0.9433*	*0.9390*	*0.0008*	*0.2932*

Table 6.C.1 (continued)
CALCULATIONAL SUMMARY FOR ALL CANDIDATE FUEL TYPES
AND BASKET CONFIGURATIONS

MPC-24E/MPC-24EF, 300PPM BORATED WATER					
Fuel Assembly Designation	***Cask***	***Maximum k_{eff}***	***Calculated k_{eff}***	***Std. Dev. (1-sigma)***	***EALF (eV)***
14x14A03	*HI-STAR*	*0.8963*	*0.8921*	*0.0008*	*0.2231*
B14x14B01	*HI-STAR*	*0.8974*	*0.8931*	*0.0008*	*0.3214*
14x14C01	*HI-STAR*	*0.9031*	*0.8988*	*0.0008*	*0.3445*
14x14D01	*HI-STAR*	*0.8588*	*0.8546*	*0.0007*	*0.4407*
14x14E02	*HI-STAR*	*0.7249*	*0.7205*	*0.0008*	*0.4186*
15x15A01	*HI-STAR*	*0.9161*	*0.9118*	*0.0008*	*0.3408*
B15x15B01	*HI-STAR*	*0.9321*	*0.9278*	*0.0008*	*0.3447*
B15x15C01	*HI-STAR*	*0.9271*	*0.9227*	*0.0008*	*0.3121*
15x15D04	*HI-STAR*	*0.9290*	*0.9246*	*0.0009*	*0.3950*
15x15E01	*HI-STAR*	*0.9309*	*0.9265*	*0.0009*	*0.3754*
15x15F01	*HI-STORM (DRY)*	*0.3897*	*0.3863*	*0.0003*	*3.192E+04*
15x15F01	*HI-TRAC*	*0.9333*	*0.9290*	*0.0008*	*0.3900*
15x15F01	*HI-STAR*	*0.9332*	*0.9289*	*0.0008*	*0.3861*
15x15G01	*HI-STAR*	*0.8972*	*0.8930*	*0.0007*	*0.4473*
15x15H01	*HI-TRAC*	*0.9399*	*0.9356*	*0.0008*	*0.3235*
15x15H01	*HI-STAR*	*0.9399*	*0.9357*	*0.0008*	*0.3248*
16x16A01	*HI-STAR*	*0.9021*	*0.8977*	*0.0009*	*0.3274*
17x17A02	*HI-STAR*	*0.9332*	*0.9287*	*0.0009*	*0.2821*
17x17B06	*HI-STAR*	*0.9316*	*0.9273*	*0.0008*	*0.3455*
17x17C02	*HI-TRAC*	*0.9320*	*0.9277*	*0.0008*	*0.2819*
17x17C02	*HI-STAR*	*0.9312*	*0.9270*	*0.0007*	*0.3530*

Table 6.C.1 (continued)
CALCULATIONAL SUMMARY FOR ALL CANDIDATE FUEL TYPES
AND BASKET CONFIGURATIONS

MPC-32 1900 PPM BORATED WATER					
Fuel Assembly Designation	***Cask***	***Maximum k_{eff}***	***Calculated k_{eff}***	***Std. Dev. (1-sigma)***	***EALF (eV)***
14x14A03	*HI-STAR*	*0.8372*	*0.8333*	*0.0006*	*0.3229*
B14x14B01	*HI-STAR*	*0.8626*	*0.8586*	*0.0006*	*0.4010*
14x14C01	*HI-STAR*	*0.8776*	*0.8736*	*0.0006*	*0.4400*
14x14D01	*HI-STAR*	*0.8405*	*0.8367*	*0.0005*	*0.5378*
14x14E02	*HI-STAR*	*0.6288*	*0.6249*	*0.0006*	*0.5995*
15x15A01	*HI-STAR*	*0.9075*	*0.9035*	*0.0006*	*0.4256*
B15x15B01	*HI-STAR*	*0.9239*	*0.9201*	*0.0006*	*0.4461*
B15x15C01	*HI-STAR*	*0.9108*	*0.9069*	*0.0006*	*0.4030*
15x15D04	*HI-STAR*	*0.9375*	*0.9335*	*0.0007*	*0.5023*
15x15E01	*HI-STAR*	*0.9348*	*0.9309*	*0.0006*	*0.4798*
15x15F01	*HI-STORM (DRY)*	*0.4691*	*0.4658*	*0.0003*	*1.207E+04*
15x15F01	*HI-TRAC*	*0.9403*	*0.9364*	*0.0006*	*0.4938*
15x15F01	*HI-STAR*	*0.9411*	*0.9371*	*0.0006*	*0.4923*
15x15G01	*HI-STAR*	*0.8980*	*0.8942*	*0.0006*	*0.5682*
15x15H01	*HI-STAR*	*0.9267*	*0.9228*	*0.0006*	*0.4228*
16x16A01	*HI-STAR*	*0.8831*	*0.8793*	*0.0006*	*0.4144*
17x17A02	*HI-STAR*	*0.9105*	*0.9066*	*0.0006*	*0.3647*
17x17B06	*HI-STAR*	*0.9309*	*0.9269*	*0.0006*	*0.4365*
17x17C02	*HI-TRAC*	*0.9365*	*0.9327*	*0.0006*	*0.4468*
17x17C02	*HI-STAR*	*0.9355*	*0.9317*	*0.0006*	*0.4469*

Table 6.C.1 (continued)
CALCULATIONAL SUMMARY FOR ALL CANDIDATE FUEL TYPES
AND BASKET CONFIGURATIONS

MPC-32 2600 PPM BORATED WATER, GUIDE TUBES FILLED					
Fuel Assembly Designation	***Cask***	***Maximum k_{eff}***	***Calculated k_{eff}***	***Std. Dev. (1-sigma)***	***EALF (eV)***
14x14A03	*HI-STAR*	*0.8362*	*0.8324*	*0.0006*	*0.4651*
B14x14B01	*HI-STAR*	*0.8633*	*0.8594*	*0.0006*	*0.5923*
14x14C01	*HI-STAR*	*0.8808*	*0.8768*	*0.0007*	*0.6567*
14x14D01	*HI-STAR*	*0.8485*	*0.8446*	*0.0006*	*0.7957*
14x14E02	*HI-STAR*	*0.6240*	*0.6200*	*0.0006*	*0.9061*
15x15A01	*HI-STAR*	*0.9121*	*0.9082*	*0.0006*	*0.6343*
B15x15B01	*HI-STAR*	*0.9286*	*0.9247*	*0.0006*	*0.6613*
B15x15C01	*HI-STAR*	*0.9150*	*0.9110*	*0.0007*	*0.5997*
15x15D04	*HI-STAR*	*0.9419*	*0.9379*	*0.0006*	*0.7572*
15x15E01	*HI-STAR*	*0.9415*	*0.9376*	*0.0006*	*0.7194*
15x15F01	*HI-STORM (DRY)*	*0.5142*	*0.5108*	*0.0004*	*1.228E+04*
15x15F01	*HI-TRAC*	*0.9463*	*0.9423*	*0.0007*	*0.7409*
15x15F01	*HI-STAR*	*0.9465*	*0.9425*	*0.0006*	*0.7421*
15x15G01	*HI-STAR*	*0.9109*	*0.9070*	*0.0006*	*0.8486*
15x15H01	*HI-STAR*	*0.9301*	*0.9263*	*0.0006*	*0.6257*
16x16A01	*HI-STAR*	*0.8868*	*0.8829*	*0.0006*	*0.6105*
17x17A02	*HI-STAR*	*0.9145*	*0.9105*	*0.0006*	*0.5382*
17x17B06	*HI-STAR*	*0.9358*	*0.9318*	*0.0007*	*0.6500*
17x17C02	*HI-TRAC*	*0.9424*	*0.9385*	*0.0006*	*0.6659*
17x17C02	*HI-STAR*	*0.9431*	*0.9391*	*0.0006*	*0.6628*

Table 6.C.1 (continued)
CALCULATIONAL SUMMARY FOR ALL CANDIDATE FUEL TYPES
AND BASKET CONFIGURATIONS

MPC-32 2600 PPM BORATED WATER, GUIDE TUBES VOIDED					
Fuel Assembly Designation	***Cask***	***Maximum k_{eff}***	***Calculated k_{eff}***	***Std. Dev. (1-sigma)***	***EALF (eV)***
14x14A03	*HI-STAR*	*0.8326*	*0.8284*	*0.0007*	*0.4699*
B14x14B01	*HI-STAR*	*0.8585*	*0.8544*	*0.0007*	*0.5998*
14x14C01	*HI-STAR*	*0.8901*	*0.8862*	*0.0006*	*0.6646*
14x14D01	*HI-STAR*	*0.8413*	*0.8376*	*0.0005*	*0.8250*
15x15A01	*HI-STAR*	*0.9094*	*0.9054*	*0.0006*	*0.6576*
B15x15B01	*HI-STAR*	*0.9313*	*0.9273*	*0.0006*	*0.6813*
B15x15C01	*HI-STAR*	*0.9181*	*0.9141*	*0.0006*	*0.6168*
15x15D04	*HI-STAR*	*0.9466*	*0.9425*	*0.0007*	*0.7525*
15x15E01	*HI-STAR*	*0.9434*	*0.9394*	*0.0007*	*0.7215*
15x15F01	*HI-TRAC*	*0.9470*	*0.9431*	*0.0006*	*0.7456*
15x15F01	*HI-STAR*	*0.9483*	*0.9443*	*0.0007*	*0.7426*
15x15G01	*HI-STAR*	*0.9135*	*0.9095*	*0.0006*	*0.8844*
15x15H01	*HI-STAR*	*0.9317*	*0.9277*	*0.0007*	*0.6239*
16x16A01	*HI-STAR*	*0.8924*	*0.8885*	*0.0006*	*0.6039*
17x17A02	*HI-STAR*	*0.9160*	*0.9119*	*0.0007*	*0.5446*
17x17B06	*HI-STAR*	*0.9371*	*0.9331*	*0.0006*	*0.6705*
17x17C02	*HI-TRAC*	*0.9436*	*0.9396*	*0.0006*	*0.6773*
17x17C02	*HI-STAR*	*0.9437*	*0.9399*	*0.0006*	*0.6780*

Table 6.C.1 (continued)
CALCULATIONAL SUMMARY FOR ALL CANDIDATE FUEL TYPES
AND BASKET CONFIGURATIONS

Note: Maximum k_{eff} = Calculated $k_{eff} + K_c \times \sigma_c + \text{Bias} + \sigma_B$
where:

K_c = 2.0
σ_c = Std. Dev. (1-sigma)
Bias = 0.0021
σ_B = 0.0006

See Subsection 6.4.3 for further explanation.

7.1 CONFINEMENT BOUNDARY

The primary confinement boundary against the release of radionuclides is the cladding of the individual fuel rods. The spent fuel rods are protected from degradation by maintaining an inert gas atmosphere (helium) inside the MPC and keeping the fuel cladding temperatures below the design basis values specified in Chapter 2.

The HI-STORM 100 confinement boundary consists of any one of the *seven*~~two~~ fully-welded MPC designs described in Chapter 1. Each MPC is identical from a confinement perspective so the following discussion applies to all MPCs. The confinement boundary of the MPC consists of:

- MPC shell
- bottom baseplate
- MPC lid (including the vent and drain port cover plates)
- MPC closure ring
- associated welds

The above items form a totally seal-welded vessel for the storage of design basis spent fuel assemblies.

The MPC requires no valves, gaskets or mechanical seals for confinement. Figure 7.1.1 shows an elevation cross-section of the MPC confinement boundary. All components of the confinement boundary are Important to Safety, Category A, as specified in Table 2.2.6. The MPC confinement boundary is designed and fabricated in accordance with the ASME Code, Section III, Subsection NB [7.1.1] to the maximum extent practicable. Chapter 2 provides design criteria for the confinement design. Section 2.2.4 provides applicable Code requirements. Exceptions to specific Code requirements with complete justifications are presented in Table 2.2.15.

7.1.1 Confinement Vessel

The HI-STORM 100 confinement vessel is the MPC. The MPC is designed to provide confinement of all radionuclides under normal, off-normal and accident conditions. The MPC is designed, fabricated, and tested in accordance with the applicable requirements of ASME, Section III, Subsection NB [7.1.1] to the maximum extent practicable. The MPC shell and baseplate assembly and basket structure are delivered to the loading facility as one complete component. The MPC lid, vent and drain port cover plates, and closure ring are supplied separately and are installed following fuel loading. The MPC lid and closure ring are welded to the upper part of the MPC shell at the loading site to provide redundant sealing of the confinement boundary. The vent and drain port

cover plates are welded to the MPC lid after the lid is welded to the MPC. The welds forming the confinement boundary are described in detail in Section 7.1.3.

The MPC lid is made intentionally thick to minimize radiation exposure to workers during MPC closure operations, and is welded to the MPC shell. The vent and drain port cover plates are welded to the MPC lid following completion of MPC draining, ~~vacuum drying~~*moisture removal*, and helium backfill activities to close the MPC vent and drain openings. The MPC lid has a stepped recess around the perimeter for accommodating the closure ring. The MPC closure ring is welded to the MPC lid on the inner diameter of the ring and to the MPC shell on the outer diameter. The combination of the welded MPC lid and closure ring form the redundant closure of the MPC.

Table 7.1.1 provides a summary of the design ratings for normal, off-normal and accident conditions for the MPC confinement vessel. Tables 1.2.2, 2.2.1, and 2.2.3 provide additional design basis information.

The design basis leakage rate for the MPC confinement boundary is provided in Table 7.1.1. The MPC shell and baseplate are helium leakage tested during fabrication in accordance with the requirements defined in Chapter 9. Following fuel loading and MPC lid welding, the MPC lid-to-shell weld is examined by liquid penetrant method (root and final), volumetrically examined (if volumetric examination is not performed, multi-layer liquid penetrant examination must be performed), helium leakage tested, and hydrostatically tested. If the MPC lid weld is acceptable, the vent and drain port cover plates are welded in place, examined by the liquid penetrant method (root and final), and a leakage rate test is performed. Finally, the MPC closure ring is installed, welded and inspected by the liquid penetrant method (root, *if multiple pass,* and final). Chapters 8, 9, and 12 provide procedural guidance, acceptance criteria, and Technical Specifications, respectively, for performance and acceptance of liquid penetrant examinations, volumetric examination, hydrostatic testing, and leakage rate testing of the field welds on the MPC.

After *m*~~final vacuum drying~~*oisture removal*, the MPC cavity is backfilled with helium. The helium backfill provides an inert atmosphere within the MPC cavity that precludes oxidation and hydride attack of the SNF cladding. Use of a helium atmosphere within the MPC contributes to the long-term integrity of the fuel cladding, reducing the potential for release of fission gas or other radioactive products to the MPC cavity. Helium also aids in heat transfer within the MPC and reduces the maximum fuel cladding temperatures. MPC inerting, in conjunction with the thermal design features of the MPC and storage cask, assures that the fuel assemblies are sufficiently protected against degradation, which might otherwise lead to gross cladding ruptures during long-term storage.

7.1.2 Confinement Penetrations

The MPC penetrations are designed to prevent the release of radionuclides under all normal, off-normal and accident conditions of storage. Two penetrations (the MPC vent and drain ports) are provided in the MPC lid for MPC draining, ~~vacuum drying~~*moisture removal* and backfilling during MPC loading operations, and for fuel cool-down and MPC flooding during unloading operations. No

other confinement penetrations exist in the MPC. The MPC vent and drain ports are equipped with metal-to-metal seals to minimize leakage and withstand the long-term effects of temperature and radiation. The vent and drain connectors allow the vent and drain ports to be operated like valves and prevent the need to hot tap into the penetrations during unloading operations. The MPC vent and drain ports are sealed by cover plates which are seal welded to the MPC lid. No credit is taken for the seal provided by the vent and drain ports. The MPC closure ring covers the vent and drain port cover plate welds and the MPC lid-to-shell weld providing the redundant closure of the MPC vessel. The redundant closures of the MPC satisfy the requirements of 10CFR72.236(e) [7.0.1].

The MPC has no bolted closures or mechanical seals. The confinement boundary contains no external penetrations for pressure monitoring or overpressure protection.

7.1.3 Seals and Welds

The MPC is designed, fabricated, and tested in accordance with the applicable requirements of ASME, Section III, Subsection NB [7.1.1] to the maximum extent practicable. The MPC has no bolted closures or mechanical seals. Section 7.1.1 describes the design of the confinement vessel welds. The welds forming the confinement boundary are summarized in Table 7.1.2.

Confinement boundary welds are performed, inspected, and tested in accordance with the applicable requirements of ASME Section III, Subsection NB [7.1.1] to the maximum extent practicable. The use of multi-pass welds, root pass, *for multiple pass welds,* and final surface liquid penetrant inspection, and volumetric examination essentially eliminates the chance of a pinhole leak through the weld. If volumetric examination is not performed, multi-layer liquid penetrant examination must be performed. Welds are also helium leak tested, providing added assurance of weld integrity. Additionally, a hydrostatic test is performed on the MPC lid-to-shell weld to confirm the weld's structural integrity. The ductile stainless steel material used for the MPC confinement boundary is not susceptible to delamination or hydrogen-induced weld degradation. The closure weld redundancy assures that failure of any single MPC confinement boundary closure weld does not result in release of radioactive material to the environment. Table 7.1.3 provides a summary of the closure weld examinations and tests.

7.1.4 Closure

The MPC is a totally seal-welded pressure vessel. The MPC has no bolted closure or mechanical seals. The MPC's redundant closures are designed to maintain confinement integrity during normal conditions of storage, and off-normal and postulated accident conditions. There are no unique or special closure devices. Primary closure welds (lid-to-shell and vent/drain port cover plate-to-lid) are examined and leakage tested to ensure their integrity. A description of the MPC weld examinations is provided in Chapter 9.

Since the MPC uses an entirely welded redundant closure system, no direct monitoring of the closure is required. Section 11.2.1.4 describes requirements for verifying the continued confinement

capabilities of the MPC in the event of off-normal or accident conditions. As discussed in Section 2.3.3.2, no instrumentation is required or provided for HI-STORM 100 storage operations, other than normal security service instruments and TLDs.

7.1.5 Damaged Fuel Container

The MPC is designed to allow for the storage of specified damaged fuel assemblies and fuel debris in a specially designed damaged fuel container (DFC). Fuel assemblies classified as damaged fuel or fuel debris ~~(assembly *array/class 6x6A, 6x6B, 6x6C, 7x7A, and 8x8A*~~ as specified in *the* ~~Technical Specifications in Chapter 12)~~ *Approved Contents Section of Appendix B to the CoC* have been evaluated.

To aid in loading and unloading, damaged fuel assemblies and fuel debris will be loaded into stainless steel DFCs prior to placement in the HI-STORM 100 System. The DFC*s that may be loaded into the MPCs are* ~~is~~ shown in Figures 2.1.1 *through Figure 2.1.2c*. The DFC is designed to provide SNF loose component retention and handling capabilities. The DFC consists of a smooth-walled, welded stainless steel square container with a removable lid. The container lid provides the means of DFC closure and handling. The DFC is provided with stainless steel wire mesh screens in the top and bottom for draining, *moisture removal*~~vacuum drying~~ and helium backfill operations. The screens are specified as a 250-by-250-mesh with an effective opening of 0.0024 inches. There are no other openings in the DFC. The ~~Technical Specifications~~ *CoC* specif*ies*~~y~~ the fuel assembly characteristics for damaged fuel acceptable for loading in the *MPC-24E, MPC-24EF,* MPC-68, *MPC-68F* or MPC-68F*F* and for fuel debris acceptable for loading in the *MPC-24EF, MPC-68F or* MPC-68F*F*. ~~Up to four (4) DFCs containing specified fuel debris may be placed in a MPC-68F. Up to 68 damaged fuel assemblies in DFCs may be stored in an MPC-68 or MPC-68F.~~

Since the DFC has screens on the top and bottom, the DFC provides no pressure retention function. The confinement function of the DFC is limited to minimizing the release of loose particulates within the sealed MPC. The storage design basis leakage rates are not altered by the presence of the DFCs. The radioactive material available for release from the specified fuel assemblies are bounded by the design basis fuel assemblies analyzed herein.

Table 7.1.1

SUMMARY OF CONFINEMENT BOUNDARY DESIGN SPECIFICATIONS

Design Condition	Design Pressure (psig)	Design Temperature (°F)
Normal	100	MPC Lid: 550
		MPC Shell: 450
		MPC Baseplate: 400
Off-Normal	100	MPC Lid: 775
		MPC Shell: 775
		MPC Baseplate: 775
Accident	*200*~~125~~	MPC Lid: 775
		MPC Shell: 775
		MPC Baseplate: 775

Table 7.1.2

MPC CONFINEMENT BOUNDARY WELDS

Confinement Boundary Welds		
MPC Weld Location	**Weld Type†**	**ASME Code Category (Section III, Subsection NB)**
Shell longitudinal seam	Full Penetration Groove (shop weld)	A
Shell circumferential seam	Full Penetration Groove (shop weld)	B
Baseplate to shell	Full Penetration Groove (shop weld)	C
MPC lid to shell	Partial Penetration Groove (field weld)	C
MPC closure ring to shell	Fillet (field weld)	††
Vent and drain port cover plates to MPC lid	Partial Penetration Groove (field weld)	D
MPC closure ring to closure ring radial	~~Full~~ *Partial* Penetration Groove (field weld)	††
MPC closure ring to MPC lid	Partial Penetration Groove (field weld)	C

† The tests and inspections for the confinement boundary welds are listed in Section 9.1.1.

†† This joint is governed by NB-5271 (liquid penetrant examination).

Table 7.1.3

CLOSURE WELD EXAMINATIONS AND TESTS

Closure Weld Description	Inspections/Tests	ASME Acceptance Criteria
MPC Lid-to-Shell	VT on Tack Welds PT Root Pass PT Final Pass VT Final Pass Volumetric Examination of Weld (UT) or multi-layer PT Hydrostatic Test Post Hydrostatic Test - PT Helium Leakage Test	NF-5360 NB-5350 NB-5350 NF-5360 NB-5332 NB-6000 NB-5350 Sect. V and ANSI N14.5
Vent/Drain Cover Plate to MPC Lid	VT on Tack Welds PT Root Pass PT Final Pass VT Final Pass Helium Leakage Test	NF-5360 NB-5350 NB-5350 NF-5360 Sect. V and ANSI N14.5
Closure Ring Radial Welds	VT on Tack Welds PT Root Pass *(if multiple pass)* PT Final Pass VT Final Pass	NF-5360 NB-5350 NB-5350 NF-5360
Closure Ring-to-MPC Shell	VT on Tack Welds PT Root Pass *(if multiple pass)* PT Final Pass VT Final Pass	NF-5360 NB-5350 NB-5350 NF-5360
Closure Ring-to-MPC Lid	VT on Tack Welds PT Root Pass PT Final Pass VT Final Pass	NF-5360 NB-5350 NB-5350 NF-5360

7.2 REQUIREMENTS FOR NORMAL AND OFF-NORMAL CONDITIONS OF STORAGE

The MPC uses multiple confinement barriers provided by the fuel cladding and the MPC enclosure vessel to assure that there is no release of radioactive material to the environment. Chapter 3 shows that all confinement boundary components are maintained within their Code-allowable stress limits during normal storage conditions. Chapter 4 shows that the peak confinement boundary component temperatures and pressures are within the design basis limits for all normal conditions of storage. Since the MPC confinement vessel remains intact, and the design bases temperatures and pressure are not exceeded, the design basis leakage rate is not exceeded during normal conditions of storage.

7.2.1 Release of Radioactive Material

The MPC is closed by the MPC lid, the vent and drain port cover plates, and the MPC closure ring. Weld examinations, including multiple surface examinations, volumetric examination, hydrostatic testing, and leakage rate testing on the MPC lid weld, and multiple surface examinations and leakage rate testing of the vent and drain port cover plate welds, assure the integrity of the MPC closure. The MPC is a strength-welded pressure vessel designed to meet the stress criteria of the ASME Code, Section III, Subsection NB [7.1.1]. The all-welded construction of the MPC with redundant closure provided by the fully welded MPC closure ring and extensive inspections and testing ensures that no release of fission gas or crud for normal storage and transfer conditions will occur. The above discussion notwithstanding, an analysis is performed in Section 7.2.7 to calculate the annual dose at 100 meters based on an assumed leakage rate of 5×10^{-6} atm-cm^3/sec under ~~*normal and off-normal conditions of storage.*~~ *reference test conditions.*

7.2.2 Pressurization of the Confinement Vessel

The loaded and sealed MPC is drained, ~~vacuum dried~~*removed of moisture*, and backfilled with helium gas. This process provides a chemically non-reactive environment for storage of spent fuel assemblies. First, air in the MPC is displaced with water and then the water is displaced by helium or nitrogen gas during MPC blowdown. The MPC is then ~~vacuum dried~~*removed of all moisture*, and backfilled with a predetermined mass of helium as specified in the Technical Specifications. Chapter 8 describes the steps of these processes and the Technical Specifications provide the acceptance criteria. This drying and backfilling process ensures that the resulting inventory of oxidizing gases in the MPC remains below 0.25% by volume, and that the MPC pressure is maintained within the design limitations. In addition, the MPC basket fluid contact areas are stainless steel alloy material or aluminum of extremely high corrosion and erosion resistance. The aluminum oxide layer on the aluminum components (e.g., heat conduction elements and Boral neutron absorption plates) ensures that there is no reaction during the short duration of exposure to the fuel pool water. Carbon steels are not employed in the construction of the MPCs. Therefore, no protective coatings which could interact with borated spent fuel pool water are used.

The only means of pressure increase in the MPC is from the temperature rise due to normal heat-up to normal operating temperatures and the release of backfill and fission gas contents from fuel rods into the MPC cavity. Under the most adverse conditions of normal ambient temperature, full insolation, and design basis decay heat, the calculated pressure increase assuming 1% fuel rod failure is well below the system design pressure as shown in Chapter 4. For off-normal conditions of storage, failure of up to 10% of the fuel rods has been analyzed and would result in an MPC internal pressure below the value specified as the normal design pressure.

7.2.3 Confinement Integrity During Dry Storage

There is no credible mechanism or event that results in a release of radioactive material from the MPC under normal conditions. Since the MPC remains structurally intact and provides redundant welded closures as discussed above, the postulated leakage of radioactive material from the MPC will be limited to a leakage rate equivalent to the acceptance test criteria specified for the MPC helium leak tests. Leakage from the MPC during normal conditions of storage could result in the release of gaseous fission products, fines, volatiles and airborne crud particulates as discussed in Section 7.3.1. The conservative assumption is made that *2.5*~~1~~% of the fuel inventory is available for release *under*~~for~~ normal conditions of storage and *11.5*~~10~~% of the fuel inventory is available for release under off-normal conditions of storage. The maximum cavity internal operating pressure with 10% fuel rod failure reported in Table 4.4.14 is bounded by the use of an internal cavity pressure of *101.48*~~0~~ psia (*6.90*~~5.4~~4 ATM), which is assumed as an initial condition for this evaluation.

The *annual dose equivalent for the whole body, thyroid and other critical organs* ~~following doses~~ to an individual at the site boundary (100 meters) as a result of an assumed effluent release under normal and off-normal conditions of storage were determined.~~; the inhaled committed dose equivalent for critical organs and tissues (gonad, breast, lung, red marrow, bone surface, thyroid, skin, lens of the eye), the effective dose from external submersion in the plume, and the resulting Total Effective Dose Equivalent (TEDE).~~ These doses were determined for each type of MPC. The ISFSI controlled area boundary must be at least 100 meters from the nearest loaded HI-STORM 100 System in accordance with 10CFR72.106(b) [7.0.1]. The doses are compared to the regulatory limits specified in 10CFR72.104*(a)* [7.0.1].

Confinement boundary welds performed at the fabricator's facility are inspected by volumetric and liquid penetrant examination methods as detailed in Section 9.1. Field welds are performed on the MPC lid, the MPC vent and drain port covers, and MPC closure ring. The weld of the MPC lid-to-shell is liquid penetrant examined on the root and final pass, volumetrically (or multilayer liquid penetrant) examined, hydrostatically tested, and leak rate tested. The vent and drain port cover plates are liquid penetrant examined on the root and final pass and leak rate tested. The MPC closure ring welds are inspected by the liquid penetrant examination method.~~ on the root and final pass.~~ In Chapter 11, the MPC lid-to-shell weld is postulated to fail to confirm the safety of the HI-STORM 100 confinement boundary. The failure of the MPC lid weld is equivalent to the MPC drain or vent

port cover weld failing. The MPC lid weld failure affects the MPC confinement boundary; however, no leakage will occur due to redundant sealing provided by the MPC closure ring.

7.2.4 Control of Radioactive Material During Fuel Loading Operations

The procedures for closure of the MPC, described in Section 8.1, are intended to assure that there is no unintended release of gas, liquid, or solid materials from the MPC during dry storage. During MPC closure operations, the lines used for venting or draining are routed to the plant's spent fuel pool or radioactive waste processing systems. MPC closure operations are performed inside the plant's fuel building in a controlled and monitored environment.

Radioactive effluent handling during fuel loading and MPC draining, ~~vacuum drying~~*moisture removal*, helium backfilling, and sealing operations is in accordance with the plant's 10CFR50 license and radioactive waste management system.

7.2.5 External Contamination Control

The external surface of the MPC is protected from contamination by preventing it from coming in contact with the spent fuel pool water. Prior to submergence in the spent fuel pool, an inflatable seal is installed at the top of the annulus formed between the MPC shell and the HI-TRAC transfer cask cavity. This annulus is filled with clean demineralized water and the seal is inflated. The inflated seal, backed by the demineralized water maintained at a slight positive pressure, is sufficient to preclude the entry of contaminated water into the annulus. These steps assure that the MPC surface is free of contamination that could become airborne during storage.

Additionally, following fuel loading operations and removal from the spent fuel pool, the upper end of the MPC shell is surveyed for loose surface contamination in accordance with the Technical Specifications contained in Chapter 12 of this FSAR.

7.2.6 Confinement Vessel Releasable Source Term

As discussed in Section 7.3.1, the source term used to evaluate the annual dose at the minimum controlled area boundary of 100 meters due to leakage from the MPC confinement boundary consists of gaseous fission products, fines, volatiles and airborne crud particulates. *For storage of spent fuel assemblies with burnups in excess of 45 GWD/MTU the source term from the assumed rod breakage fractions of ISG-5 [7.2.2] must be augmented by the source term from 50% of the rods having peak cladding thicknesses greater than 70 micrometers. ISG-11 [7.2.1] recommends that for high burnup fuel assemblies to be classified as intact, no more than 3% of the rods may have peak cladding oxide thickness' greater than 70 micrometers and no more than 1% of the rods may have peak cladding oxide thickness' greater than 80 micrometers. Using Equation 7-0 below the fraction of the source term available for release may be determined:*

Equation 7-0

$$F_R = F_B * (100\%) + F_{70} * P_S$$

where:

F_R *is the percentage of the source term available for release,*
F_B *is the rod breakage fraction from ISG-5,*
F_{70} *is the percentage of rods that have peak cladding oxide thicknesses greater than 70 microns*
P_S *percentage of the source term for rods having peak cladding oxide thickness' greater than 70 microns that must be included in the total source term available for release.*

Table 7.2.1 contains a summary of the values required for Equation 7-0 and the results for normal and off-normal conditions of storage. ~~For this evaluation, it is conservatively assumed that 1% of the fuel inventory is available for release under normal conditions of storage and 10% of the fuel inventory is available for release under off-normal conditions of storage.~~ *Additionally, a* summary of the isotopes available for release is provided in Table 7.3.1.

7.2.7 Release of Contents Under Normal and Off-Normal Storage Conditions

7.2.7.1 *Confinement Boundary*~~Seal~~ Leakage Rate

The methodology presented in Section 7.3.3.1 was used to determine the leakage rate at the upstream conditions. Using the capillary diameter determined in Section 7.3.3.1, and the parameters for normal and off-normal conditions provided in Table 7.3.4, Equation 7-3 was solved for the leakage rate at the upstream conditions. The resultant normal and off-normal condition leakage rate, *1.12*~~9.5~~x10^{-65} cm^3/s (at ~~510~~*581* K, *6.90*~~5.44~~ ATM) was calculated.

7.2.7.2 Percentage of Nuclides that Remain Airborne

In addition to the small fraction of fines that are released in the event of a cladding breach, only 10% of the fines released to the MPC cavity remain airborne long enough to be available for release from the MPC [7.3.11]. It is conservatively assumed that 100% of the volatiles, crud and gases remain airborne and available for release.

7.2.7.*3*~~2~~ Fraction of Volume Released

The minimum free volume of *each MPC design* ~~the confinement vessel~~ is presented in Tables *4.4.12, 4.4.13, 4.4.24, and 4.4.25.*~~14 (6.53 x 106 cm3 for the MPC-24 and 5.99 x 106 cm3 for MPC-68 and MPC-68F)~~. Using these volumes and the upstream normal and off-normal condition leakage rate of ~~9.5~~*1.12*x10^{-56} cm^3/s, the fraction of the volume released per second is calculated. *For calculation of the doses from the MPC-24, MPC-24E and MPC-24EF the minimum free volume from the MPC-24E is used as it conservatively bounds the MPC-24 and MPC-24EF.*

7.2.7.~~43~~ Release Fraction

The release fraction is that portion of the total radionuclide inventory that is released from the *inside of the fuel rods* ~~confinement boundary~~ to the *MPC cavity* ~~atmosphere (i.e., outside the MPC)~~. The release fractions provided in NUREG/CR-6487 [7.3.2] are used. A summary of the release fractions is provided in Table 7.3.1.

7.2.7.54 Radionuclide Release Rate

The radionuclide release rate is the product of the quantity of isotopes available for release, the number of assemblies, *the percentage of nuclides that remain airborne,* the fraction of volume released, and the release fraction.

7.2.7.~~65~~ Atmospheric Dispersion Factor

For the evaluation of the dose at the controlled area boundary, the instantaneous χ/Q calculated for accident conditions (8.0×10^{-3} sec/m^3) was reduced to 1.6×10^{-4} sec/m^3 based on the long term nature of the release (1 year); the height of the release being essentially a ground level release (h_e = 0); all 16 compass directions (22.5 degree sectors) will be similarly affected due to the long term nature of the continuous release (over one year); the increase in average wind speeds (>1 m/s); and the additional effects of a reduction in atmospheric stability. Therefore, the χ/Q reduction factor of 50 used to correct the short term accident release χ/Q is conservative.

7.2.7.~~76~~ Dose Conversion Factors

Dose Conversion Factors (DCF) from EPA Federal Guidance Report No. 11, Table 2.1 [7.3.5] and EPA Federal Guidance Report No. 12, Table III.1 [7.3.6] were used for the analysis. The DCFs are provided on the spread sheets included as Appendix 7.A.

7.2.7.~~87~~ Occupancy Time

An occupancy time of 8,760 hours is used for the analysis [7.0.2]. This conservatively assumes that the individual is exposed 24 hours per day for 365 days at the minimum controlled area boundary of 100 meters.

7.2.7.~~98~~ Breathing Rate

A breathing rate of 3.3×10^{-4} m^3/sec for a worker is used for the analysis [7.0.2]. This assumption is in accordance with the guidance provided in NUREG-1536 [7.0.2] for a worker.

7.2.8 Postulated Doses Under Normal and Off-Normal Conditions of Storage

The *annual dose equivalent for the whole body, thyroid and other critical organs* ~~following doses~~ to an individual at the site boundary (100 meters) as a result of an assumed effluent release under normal and off-normal conditions of storage were determined~~; the inhaled committed dose equivalent for critical organs and tissues (gonad, breast, lung, red marrow, bone surface, thyroid, skin, lens of the eye), the effective dose from external submersion in the plume, and the resulting Total Effective Dose Equivalent (TEDE).~~. These doses are determined for each type of MPC and for each condition of storage (i.e., normal and off-normal). The postulated doses as a result of exposure to soil with ground surface contamination and soil contaminated to a depth of 15 cm were also determined. The resultant doses were negligible compared to ~~the~~ those resulting from submersion in the plume and are therefore not reported.

The doses were determined using spreadsheet software. The resultant doses are summarized for each MPC type in Tables 7.3.2~~, 7.3.3, and 7.3.4~~ *through Table 7.3.5* of the HI-STORM FSAR. Example spread sheets used for the dose estimates are presented in Appendix 7.A. *Table 7.3.9 compares the doses to the regulatory limits of 10CFR72.104(a).*

7.2.8.1 Whole Body Dose ~~(Total Effective Dose Equivalent)~~

The *annual dose equivalent to the whole body (ADE)* ~~whole body dose~~ is the sum of the inhaled committed effective dose equivalent (CEDE) and the ~~external exposure~~*deep dose equivalent to the whole body* from submersion in the plume. The postulated doses were determined using spreadsheet software. Example spread sheets are provided in Appendix 7.A.

The CEDE is the product of radionuclide release rate, the atmospheric dispersion factor, the occupancy time, the breathing rate, and the effective dose conversion factor.

The Deep Dose Equivalent ~~External exposure from submersion~~ is the product of the nuclide release rate, the atmospheric dispersion factor, the occupancy time, and the effective dose conversion factor.

7.2.8.2 Critical Organ Dose

The *Annual D*~~d~~ose *Equivalent (ADE)* to the critical organ (or tissue) is the sum of the committed dose equivalent *(CDE)* to the critical organ or tissue from inhalation and the *deep* dose equivalent *(DDE)* to the organ or tissue from submersion in the plume. The postulated doses as a result of exposure to soil with ground surface contamination and soil contaminated to a depth of 15 cm were also determined. The resultant doses were negligible compared to ~~the~~ those resulting from submersion in the plume and are therefore not reported.

The committed dose equivalent to the organ or tissue from inhalation is the product of *the* radionuclide release rate, the atmospheric dispersion factor, the occupancy time, the breathing rate,

and the organ/tissue dose conversion factor. The *deep* dose equivalent to the organ or tissue from submersion in the plume is the product of the *radio*nuclide release rate, the atmospheric dispersion factor, the occupancy time, and the organ/tissue dose conversion factor.

~~The doses for tissues and organs other than lens of the eye were determined using spreadsheet software. The dose to the lens of the eye as a result of submersion in the plume was estimated using guidance from Dr. James Turner in his book, Atoms, Radiation, and Radiation Protection [7.3.10]]. Dr. Turner states that alpha particles and low energy beta particles, such as those from tritium, cannot penetrate to the lens of the eye (at a depth of 3 mm). The discussion continues that many noble gases emit photons and energetic beta particles, which in turn must be considered in the dose estimate. Dr. Turner states that the dose equivalent rate to tissues near the surface of the body (e.g., lens of the eye) is more than 130 times the dose equivalent rate in the lung from gases contained in the lung. The estimated dose to the lens of the eye is greatest using the accident condition of storage for the MPC-68. Section 7.3.4.2 presents the detailed discussion of the dose to the lens of the eye.~~

7.2.8.3 Site Boundary

The estimated annual dose equivalent for critical organs and the whole body at the minimum site boundary of 100 meters are presented in Tables 7.3.2 through 7.3.5. Since doses from any one MPC does not bound the doses from all other MPCs, bounding doses have been presented in Table 7.3.8 for BWR fuel (MPC-68, MPC-68F and MPC-68FF) and PWR fuel (MPC-24, MPC-24E, MPC-24EF and MPC-32) separately. The doses from the MPC-68 bound the doses from all casks containing BWR fuel and the doses from the MPC-32 bounds the doses from all casks containing PWR fuel. Additionally, Table 7.3.8 compares these bounding doses to the regulatory limits of 10CFR72.104(a).

7.2.9 Assumptions

The following presents a summary of assumptions for the normal condition confinement analysis of the HI-STORM 100 System.

- The distance from the cask to the site boundary is 100 meters.

- ~~Under normal conditions of storage, 1% of the fuel rods have ruptured. This assumption is in accordance with NUREG-1536 for normal storage conditions.~~

- *Under normal conditions of storage, 2.5~~1~~% of the source term is available for release.* Under off-normal conditions of storage, 1*1.5*~~0~~% of the *source terms are available for release* ~~fuel rods have ruptured~~. This assumption is in accordance with ISG-5 *[7.2.2], ISG-11 [7.2.1]* and NUREG-1536 *[7.0.2]* for *normal and* off-normal storage conditions.

- Unchoked flow correlations were used as the unchoked flow correlations better approximate the true measured flow rate for the leakage rates.

- For conservatism, the upstream pressure at *reference* test conditions (inside of the MPC) is assumed to be 2 ATM and the down stream pressure (outside of the MPC) is assumed to be 1 ATM.

- *The leak hole diameter is determined using reference test conditions rather than actual test conditions from Table 7.3.7. This is conservative, as it yields a larger leak hole diameter.*

- The temperature at test conditions is assumed to be equal to a temperature, 212° F based on the maximum temperature achievable by the water in the MPC during performance of the leak test. This is conservative because the leak hole diameter computed from test conditions is larger.

- *Off-*~~N~~*n*ormal storage conditions (i.e., MPC cavity at a pressure of *101.4*~~80~~ psia (*6.905*~~.44~~ ATM) at MPC cavity average temperature of ~~510~~*581* K) are postulated for this analysis as these conditions bound the ~~off-~~normal conditions of storage.

- The capillary length required for Equation 7-3 was conservatively chosen to be the MPC lid closure weld which is 1.9 cm.

- The majority of the activity associated with crud is due to ^{60}Co. This assumption follows from the discussion provided in NUREG/CR-6487 [7.3.2].

- The normal and off-normal condition leakage rate persists for one year without a decrease in the rate or nuclide concentration.

- The individual at the site boundary is exposed for 8,760 hours [7.0.2]. This conservatively assumes that the individual is exposed 24 hours per day for 365 days.

- A breathing rate of 3.3 x 10^{-4} m^3/sec for a worker is used for the analysis [7.0.2]. This assumption is in accordance with the guidance provided in NUREG-1536 for a worker.

- All fuel stored in the MPC is of the design basis type with a bounding burnup and cooling time.

- Exposure to dose conversion factors for inhalation reported in EPA Federal Guidance Report No. 11, Table 2.1 [7.3.5] were selected by *the most restrictive*~~lung~~ clearance class *for each organ and each radionuclide*~~which reports the most conservative values~~.

- For conservat~~iv~~ism, the maximum possible leakage rate *under reference test conditions* is assumed to be 7.5x10^{-6} atm-cm^3/s, which is 150% of the *reference* test leak rate of 5.0x10^{-6} atm-cm^3/s.

Table 7.2.1
Parameters for Determining the Percentage of the Source Term Available for Release

MPC-24, MPC-24E, MPC-24EF, MPC-32, MPC-68 and MPC-68FF

Parameter	*Normal*	*Off-Normal*
F_B	.01	.10
F_{70}	3.0%	3.0%
P_S	50%	50%
F_R	**2.5%**	**11.5%**

MPC-68F

Parameter	*Normal*	*Off-Normal*
F_R	**1.0%**	**10.0%**

7.3 CONFINEMENT REQUIREMENTS FOR HYPOTHETICAL ACCIDENT CONDITIONS

The MPC uses redundant confinement closures to assure that there is no release of radioactive materials, including fission gases, volatiles, fuel fines or crud, for postulated storage accident conditions. The analyses presented in Chapters 3 and 11 demonstrate that the MPC remains intact during all normal, off-normal and postulated accident conditions, including the associated increased internal pressure due to decay heat generated by the stored fuel. The MPC is designed, fabricated, and tested in accordance with the applicable requirements of ASME, Section III, Subsection NB [7.1.1] to the maximum extent practicable. In summary, there is no mechanistic failure that results in a breach of the MPC confinement boundary.

The above discussion notwithstanding, this section evaluates the consequences of a non-mechanistic postulated ground level breach of the MPC confinement boundary. This breach could result in the release of gaseous fission products, fines, volatiles and airborne crud particulates. The internal *design* accident pressure of *200*~~125~~ psig, as specified in Table 7.1.1, is *conservatively increased in the analysis to 225 psig* ~~assumed as an initial condition~~ for this evaluation. The following doses to an individual at the site boundary (100 meters) as a result of an assumed effluent release under accident conditions of storage were determined*:*~~; the inhaled committed dose equivalent for critical organs and tissues (gonad, breast, lung, red marrow, bone surface, thyroid, skin, lens of the eye), the effective dose from external submersion in the plume, and the resulting Total Effective Dose Equivalent (TEDE).~~ *the committed dose equivalent (CDE) from inhalation and the deep dose equivalent (DDE) from submersion for critical organs and tissues (gonad, breast, lung, red marrow, bone surface, thyroid); the committed effective dose equivalent (CEDE) from inhalation and the deep dose equivalent (DDE) from submersion for the whole body; the lens dose equivalent (LDE) for the lens of the eye; the shallow dose equivalent (SDE) from submersion for the skin; and the resulting Total Effective Dose Equivalent (TEDE) and Total Organ Dose Equivalent (TODE).*

These doses were determined for each type of MPC. The ISFSI controlled area boundary must be at least 100 meters from the nearest loaded HI-STORM 100 System in accordance with 10CFR72.106(b) [7.0.1]. The doses are compared to the regulatory limits specified in 10CFR72.106(b) [7.0.1].

7.3.1 Confinement Vessel Releasable Source Term

In accordance with NUREG/CR-6487 [7.3.2], the following contributions are considered in determining the releasable source term for packages designed to transport irradiated fuel rods: (1) the radionuclides in the fuel rods, (2) the radionuclides on the surface of the fuel rods, and (3) the residual contamination on the inside surfaces of the vessel. NUREG/CR-6487 goes on to state that a radioactive aerosol can be generated inside a vessel when radioactive material from the fuel rods or from the inside surfaces of the container become airborne. The sources for the airborne material are (1) residual activity on the cask interior, (2) fission and activation-product activity associated with corrosion-deposited material (crud) on the fuel assembly surface, and (3) the radionuclides within the

individual fuel rods. In accordance with NUREG/CR-6487, contamination due to residual activity on the cask interior surfaces is negligible as compared to crud deposits on the fuel rods themselves and therefore may be neglected. The source term considered for this calculation results from the spallation of crud from the fuel rods and from the fines, gases and volatiles which result from cladding breaches. The methodology of NUREG/CR-6487 is conservatively applied to the storage confinement accident analysis as dry storage conditions are less severe than transport conditions.

The inventory for isotopes other than ^{60}Co is calculated with the SAS2H and ORIGEN-S modules of the SCALE 4.3 system as described in Section 5.2. The inventory for the MPC-24, *MPC-24E, MPC-24EF and MPC-32* was conservatively based on the B&W 15x15 fuel assembly with a burnup of *704*~~0~~,000 MWD/MTU, 5 years of cooling time, and an enrichment of *4.8*~~3.4~~*%*. The inventory for the MPC-68 *and MPC-68FF* was based *on* the GE 7x7 fuel assembly with a burnup of *604*~~0~~*,000* MWD/MTU, 5 years of cooling time, and *4.4*~~3.0~~*%* enrichment. The ~~Technical Specifications in Chapter 12~~ *CoC* limits the fuel assembly burnup ~~well~~ below *604*~~0~~,000 MWD/MTU for both BWR and PWR fuel at 5 years of cooling time. This ensures that the inventory used in this calculation exceeds that of the fuel authorized for storage ~~in accordance with the Technical Specifications~~. The inventory for the MPC-68F was based on the GE 6x6 fuel assembly with a burnup of 30,000 MWD/MTU, 18 years of cooling time, and 1.8% enrichment. The ~~Technical Specifications~~ *CoC* limits the burnup and cooling time of fuel *(intact, damaged or debris)*~~debris~~ in an MPC-68F to a maximum of 30,000 MWD/MTU at a minimum of 18 years cooling time. *Additionally, the MPC-68F was analyzed containing 67 GE 6x6 assemblies and a DFC containing 18 thorium rods. Finally, an Sb-Be source stored in one fuel rod in one assembly with 67 GE 6x6 assemblies was analyzed.* The isotopes which contribute greater than 0.1% to the total curie inventory for the fuel assembly are considered in the evaluation as fines. The analysis also includes actinides as the dose conversion factors for these isotopes are in general, orders of magnitude greater than other isotopes (e.g., isotopes of plutonium, americium, curium, and neptunium were included regardless of their contribution to the inventory). A summary of the isotopes available for release is provided in Table 7.3.1.

7.3.2 Crud Radionuclides

The majority of the activity associated with crud is due to ^{60}Co [7.3.2]. The inventory for ^{60}Co was determined by using the crud surface activity for PWR rods (140×10^{-6} Ci/cm^2) and for BWR rods (1254×10^{-6} Ci/cm^2) provided in NUREG/CR-6487 [7.3.2] multiplied by the surface area per assembly (3×10^5 cm^2 and 1×10^5 cm^2 for PWR and BWR, respectively, also provided in NUREG/CR-6487). The source terms were then decay corrected (5 years for the MPC-24, *MPC-24E, MPC-24EF, MPC-32, MPC-68* and MPC-68*FF*; 18 years for the MPC-68F) using the basic radioactive decay equation:

Equation 7-1:

$$A(t) = A_0 e^{-\lambda t}$$

where:

A(t)	is activity at time t [Ci]
A_0	is the initial activity [Ci]
λ	is the $\ln 2/t_{1/2}$ (where $t_{1/2}$ = 5.272 years for ^{60}Co)
t	is the time in years (5 years for the MPC-24, *MPC-24E, MPC-24EF, MPC-32, MPC-68* and MPC-68*FF*; 18 years for the MPC-68F)

Total ^{60}Co crud is 140 μCi/cm^2 for PWR and 1254 μCi/cm^2 for BWR [7.3.2].

PWR
Surface area per Assy = 3.0E+05 cm^2
140 μCi/cm^2 x 3.0E+05 cm^2 = 42.0 Ci

BWR
Surface area per Assy = 1.0E+05 cm^2
1254 μCi/cm^2 x 1.0E+05 cm^2 = 125.4 Ci

$^{60}Co(t) = {}^{60}Co_0\, e^{-(\lambda t)}$, where $\lambda = \ln 2/t_{1/2}$, t = 5 years (for the MPC-24, *MPC-24E, MPC-24EF, MPC-32* and MPC-68), t = 18 years (MPC-68F), $t_{1/2}$ = 5.272 years for ^{60}Co [7.3.3]

<u>MPC-24, *MPC-24E, MPC-24EF and MPC-32*</u>

$^{60}Co(5) = 42.0\ Ci\ e^{-(\ln 2/5.272)(5)}$
$^{60}Co(5) = 21.77\ Ci$

<u>MPC-68 *and MPC-68FF*</u>

$^{60}Co(5) = 125.4\ Ci\ e^{-(\ln 2/5.272)(5)}$
$^{60}Co(5) = 64.98\ Ci$

<u>MPC-68F</u>

$^{60}Co(18) = 125.4\ Ci\ e^{-(\ln 2/5.272)(18)}$
$^{60}Co(18) = 11.76\ Ci$

A summary of the ^{60}Co inventory available for release is provided in Table 7.3.1.

7.3.3 <u>Release of Contents Under Non-Mechanistic Accident Conditions of Storage</u>

7.3.3.1 <u>*Confinement Boundary*~~Seal~~ Leakage Rate</u>

The helium leak rate testing performed on the MPC confinement boundary verifies the helium leak rate *under reference test conditions* to be less than or equal to 5×10^{-6} atm-cm^3/s [1] as required by the

[1] According to ANSI N14.5 (1997), the mass-like leakage rate specified herein is often used in leakage testing. This is defined as the rate of change of the pressure-volume product of the leaking fluid at test conditions.

Technical Specifications. As demonstrated by analysis, the MPC confinement boundary is not compromised as a result of normal, off-normal, and accident conditions. Based on the robust nature of the MPC confinement boundary, the NDE inspection of the welds, and the measurement of the helium leakage rate, there is essentially no leakage. However, it is conservatively assumed that the maximum possible leakage rate *under reference test conditions* from the confinement vessel is 7.5×10^{-6} atm-cm^3/s. *The actual leakage test is performed at an elevated pressure (90 +10/-0 psig) to magnify the leakage rate. For purposes of determining the leak hole diameter, reference test condition parameters from Table 7.3.7 are used in Equation 7-2 and Equation 7-3 as it results in a larger leak hole diameter.*

Equation B-1 of ANSI N14.5 (1997) [7.3.8] is used to express this mass-like helium flow rate (Q_u) measured in atm-cm^3/s as a function of the upstream volumetric leakage rate (L_u) as follows:

Equation 7-2

$$Q_u = L_u * P_u \quad \text{atm-cm}^3\text{/sec (Equation B-1 from ANSI N14.5(1997))}$$

$$L_u = Q_u/P_u \quad \text{cm}^3\text{/sec}$$

where:

L_u is the upstream volumetric leakage rate [cm^3/s],
Q_u is the mass-like helium leak rate [atm cm^3/s], and
P_u is the upstream pressure [ATM]

The corresponding leakage rate at accident conditions is determined using the following methodology. For conservatism, unchoked flow correlations were used as the unchoked flow correlations better approximate the true measured flowrate for the leakage rates. Using the equations for molecular and continuum flow, Equation B-5 provided in ANSI N14.5-1997 [7.3.8], the corresponding capillary diameter, D, was calculated. For conservatism, the upstream pressure at *reference* test conditions (inside of the MPC) is assumed to be 2 ATM (minimum) and the down stream pressure (outside of the MPC) is assumed to be 1 ATM (at 298 K), therefore, the average pressure is 1.5 ATM. The evaluation was performed using the helium gas temperature at *reference* test conditions of both 70°F and 212°F. These temperatures are representative of the possible temperature of the helium gas in the confinement vessel during the helium leak test. The 212°F helium temperature is the upper bound because the water inside the MPC is shown not to boil in Chapter 4 as long as the "time-to-boil" time limit is not exceeded. From the two calculations using the two temperatures, it was determined that the higher temperature (212°F) results in a greater capillary diameter. The capillary length required for Equation 7-3 was conservatively chosen to be the minimum MPC lid closure weld which is 1.9 cm. Table 7.3.6 provides a summary of the parameters used in the calculation.

Equation 7-3

$$L_u = [\frac{2.49x10^6 D^4}{a\,u} + \frac{3.81x10^3 D^3 \sqrt{\frac{T}{M}}}{a\,P_a}][P_u - P_d][\frac{P_a}{P_u}]$$

where:

L_u	is the allowable leakage rate at the upstream pressure [cm^3/s],
a	is the capillary length [cm],
T	is the temperature [°K],
M	is the gas molecular weight [g/mole] from ANSI N14.5, Table B1 [7.3.8],
u	is the fluid viscosity for helium [cP] from Rosenhow and Hartnett [7.3.9]
P_u	is the upstream pressure [ATM],
P_d	is the downstream pressure [ATM], and
P_a	is the average pressure; $P_a = (P_u + P_d)/2$ [ATM].
D	is the capillary diameter [cm].

The capillary diameter (D) computed from the above equation is equal to $4.96x10^{-4}$ cm.

Using the capillary diameter determined above, and the parameters for accident conditions provided in Table 7.3.6, Equation 7-3 was solved for the leakage rate at the upstream conditions. The resultant hypothetical accident leakage rate, $1.9\cancel{2}5x10^{-5}$ cm^3/s (at 843 K, *16.31*~~9.5~~ ATM) was calculated.

7.3.3.2 *Percentage of Nuclides that Remain Airborne*

In addition to the small fraction of fines that are released in the event of a cladding breach, only about 10% of the fines released to the MPC cavity remain airborne long enough to be available for release from the cask MPC [7.3.11]. It is conservatively assumed that 100% of the volatiles, crud and gases remain airborne and available for release.

7.3.3.3 Fraction of Volume Released

The minimum free volume of *each MPC design* the confinement vessel is presented in Table 4.4.14, *4.4.13, 4.4.24, and 4.4.25.* ~~(6.53 x 106 cm3 for the MPC-24 and 5.99 x 106 cm3 for MPC-68 and MPC-68F).~~ Using these volumes and the upstream hypothetical accident leakage rate of $1.25x10^{-5}$ cm^3/s, the fraction of the volume released per second is calculated. *For the analysis of the MPC-24 and MPC-24E, the smaller of the two minimum free volumes was conservatively chosen.*

7.3.3.~~43~~ Release Fraction

The release fraction is that portion of the total radionuclide inventory that is released from the ~~confinement boundary~~ *cladding* to the *MPC cavity*.~~atmosphere (i.e., outside the MPC).~~ The release fractions provided in NUREG/CR-6487 [7.3.2] are used. A summary of the release fractions is provided in Table 7.3.1.

7.3.3.54 Radionuclide Release Rate

The radionuclide release rate is the product of the quantity of isotopes available for release, the number of assemblies, *the percentage of nuclides that remain airborne,* the fraction of volume released, and the release fraction.

7.3.3.~~65~~ Atmospheric Dispersion Factor

The short-term accident condition atmospheric dispersion factor at 100 meters was determined using Regulatory Guide 1.145 [7.3.4]. In accordance with NUREG-1536 [7.0.2], the dispersion factor was determined on the basis of F-stability diffusion, a wind speed of 1 m/s, and plume meandering.

Reg Guide 1.145 [7.3.4] specifies that χ/Q be calculated using the following three equations. The values determined using Equations 7-4 and 7-5 should be compared and the higher value selected. This value should be compared with the value determined using Equation 7-6, and the lower value of these two should be selected as the appropriate χ/Q value. This methodology was used to determine the value for χ/Q.

Equation 7-4

$$\frac{\chi}{Q} = \frac{1}{U(\pi \sigma_y \sigma_z + A/2)}$$

Equation 7-5

$$\frac{\chi}{Q} = \frac{1}{U(3\pi \sigma_y \sigma_z)}$$

Equation 7-6

$$\frac{\chi}{Q} = \frac{1}{U \pi \Sigma_y \sigma_z}$$

where:

χ/Q is relative concentration, in sec/m^3,
π is 3.14159,
U is windspeed at 10 meters above plant grade, in m/sec,
σ_y is lateral plume spread, in meters, a function of atmospheric stability and distance (Figure 1, Reg Guide 1.145 [7.3.4]),
σ_z is vertical plume spread, in meters, a function of atmospheric stability and distance (Figure 2, Reg Guide 1.145 [7.3.4]),
Σ_y is lateral plume spread with meander and building wake effects, in m, = M σ_y, where M is determined from Figure 3, Reg Guide 1.145 [7.3.4], and
A is the smallest vertical-plane cross-sectional area of the structure (cross section of the MPC), m^2.

Equations 7-4 through 7-6 were solved using the parameters presented in Table 7.3.5. The atmospheric dispersion factor, χ/Q, at 100 meters was selected in accordance with the methodology described above. The χ/Q value used to determine the dose is 8.0×10^{-3} sec/m^3. This short term accident condition χ/Q is deemed conservative for an accident evaluation period of 30 days.

7.3.3.7~~6~~ Dose Conversion Factors

Dose Conversion Factors (DCF) from EPA Federal Guidance Report No. 11, Table 2.1 [7.3.5] and EPA Federal Guidance Report No. 12, Table III.1 [7.3.6] were used for the analysis. The DCFs are provided on the spread sheets included as Appendix 7.A.

7.3.3.8~~7~~ Occupancy Time

An occupancy time of 720 hours (30 days) is used for the analysis [7.0.2]. This conservatively assumes that the individual is exposed 24 hours per day for 30 days at the minimum controlled area boundary of 100 meters. The accident event duration is considered conservative as any accident condition of storage resulting in the failure of 100% of the stored fuel rods would be detected by the routine security and surveillance inspections and corrective actions would be completed prior to the end of this 30-day period.

7.3.3.9~~8~~ Breathing Rate

A breathing rate of 3.3×10^{-4} m^3/sec for a worker is used for the analysis [7.0.2]. This assumption is in accordance with the guidance provided in NUREG-1536 [7.0.2] for a worker.

7.3.4 Postulated Accident Doses

The following doses to an individual at the site boundary (100 meters) as a result of an assumed effluent release under accident conditions of storage were determined; ~~the inhaled committed dose equivalent for critical organs and tissues (gonad, breast, lung, red marrow, bone surface, thyroid,~~

~~skin, lens of the eye), the effective dose from external submersion in the plume, and the resulting Total Effective Dose Equivalent (TEDE).~~ *the committed dose equivalent (CDE) from inhalation and the deep dose equivalent (DDE) from submersion for critical organs and tissues (gonad, breast, lung, red marrow, bone surface, thyroid); the committed effective dose equivalent (CEDE) from inhalation and the deep dose equivalent (DDE) from submersion for the whole body; the lens dose equivalent (LDE) for the lens of the eye; the shallow dose equivalent (SDE) from submersion for the skin; and the resulting Total Effective Dose Equivalent (TEDE) and Total Organ Dose Equivalent (TODE).* These doses are determined for each type of MPC. The postulated doses as a result of exposure to soil with ground surface contamination and soil contaminated to a depth of 15 cm were also determined. The resultant doses were negligible compared to the those resulting from submersion in the plume and are therefore not reported.

The doses were determined using spreadsheet software. The resultant doses are summarized for each MPC type in Tables 7.3.2~~, 7.3.3, and 7.3.4~~ through Table 7.3.5 of the HI-STORM FSAR. Example spread sheets used for the dose estimates are presented in Appendix 7.A.

7.3.4.1 Whole Body Dose (Total Effective Dose Equivalent)

The *Total Effective Dose Equivalent* ~~whole body dose~~ is the sum of the inhaled committed effective dose equivalent (CEDE) *from inhalation* and the *deep dose equivalent (DDE) to the whole body*~~external exposure~~ from submersion in the plume. The postulated doses were determined using spreadsheet software. Example spread sheets are provided in Appendix 7.A.

The CEDE is the product of radionuclide release rate, the atmospheric dispersion factor, the occupancy time, the breathing rate, and the effective dose conversion factor. *The deep dose equivalent to the whole body* ~~External exposure~~ from submersion is the product of the nuclide release rate, the atmospheric dispersion factor, the occupancy time, and the effective dose conversion factor.

7.3.4.2 Critical Organ Dose

The dose to the critical organ (or tissue) is the sum of the committed dose equivalent to the critical organ or tissue from inhalation and the *deep* dose equivalent to the organ or tissue from submersion in the plume. The postulated doses as a result of exposure to soil with ground surface contamination and soil contaminated to a depth of 15 cm were also determined. The resultant doses were negligible compared to the those resulting from submersion in the plume and are therefore not reported.

The committed dose equivalent to the organ or tissue from inhalation is the product of radionuclide release rate, the atmospheric dispersion factor, the occupancy time, the breathing rate, and the organ/tissue dose conversion factor. The *deep* dose equivalent to the organ or tissue from submersion in the plume is the product of the nuclide release rate, the atmospheric dispersion factor, the occupancy time, and the organ/tissue dose conversion factor.

The ~~dose to the lens of the eye~~ *lens dose equivalent (LDE)* as a result of submersion in the plume was estimated using guidance from Dr. James Turner in his book, *Atoms, Radiation, and Radiation*

Protection [7.3.10]. Dr. Turner states that alpha particles and low-energy beta particles, such as those from tritium, cannot penetrate to the lens of the eye (at a depth of 3 mm). The discussion continues that many noble gases emit photons and energetic beta particles, which in turn must be considered in the dose estimate. Dr. Turner states that the dose-equivalent rate to tissues near the surface of the body (e.g., lens of the eye) is more than 130 times the dose-equivalent rate in the lung from gases contained in the lung. Using the accident condition of storage for the MPC-68 *and the MPC-32* (which *have* ~~is~~ the highest dose to the lung *for BWR and PWR fuel respectively*), the estimated dose to the lung from gases in the lung is *$3.60x10^{-3}$ mrem and $4.88x10^{-3}$ mrem, respectively.* ~~2.62x10-6 mrem.~~ Conservatively multiplying this value by 150, the estimated ~~dose to the lens of the eye~~*LDE* is 0.*540 mrem for BWR fuel and 0.732 mrem for PWR fuel. These estimated LDEs for BWR and PWR fuel are a small fraction of the 15 rem limit imposed by 10CFR72.106(b).* ~~3.93x10-4 mrem. This estimated dose to the lens of the eye, 3.93x10-4 mrem, is a small fraction of the 15 rem limit imposed by 10 CFR 72.106(b).~~

7.3.5 Site Boundary

The estimated accident doses at the controlled area boundary are highest for the accident condition of storage for the MPC-68 *for BWR fuel and the MPC-32 for PWR fuel.* The estimated TEDEs (*39.24*~~.0~~ mrem *for BWR fuel and 29.1 mrem for PWR fuel*) are~~is a~~ small fractions of the 5 rem whole body limit imposed by 10 CFR 72.106(b). The *maximum* estimated *Total Organ Dose Equivalents (TODE) to the lung and* bone surface,~~ dose~~ which *are*~~is~~ the highest critical organ doses *to BWR and PWR fuel, respectively,* (*205*~~468~~ mrem *and 233 mrem, respectively*) *are*~~is a~~ small fractions of the 50 rem critical organ limit imposed by 10 CFR 72.106(b). Additionally, the shallow dose *equivalents*~~estimate~~ to *the* skin (0.*303*~~11~~ mrem *and 0.202 mrem*) *are*~~is a~~ small fractions of the 50 rem shallow dose equivalent to skin or other extremity limit imposed by 10 CFR 72.106(b).

~~The estimated annual dose at the controlled area boundary is highest due to anticipated occurrences (off-normal) using the MPC-68. The estimated TEDE (0.94 mrem/yr) is a small fraction of the annual 25 mrem whole body limit imposed by 10 CFR 72.104(a). The estimated thyroid dose (0.11 mrem/yr) is a small fraction of the annual 75 mrem thyroid limit imposed by 10 CFR 72.104(a). Additionally, the dose estimates to other critical organs are small fractions of the annual 25 mrem critical organ limit imposed by 10 CFR 72.104(a). The highest of the "other critical organs" is 8.65 mrem to the bone surface.~~

7.3.6 Assumptions

The following presents a summary of assumptions for the accident condition confinement analysis of the HI-STORM 100 System.

- The distance from the cask to the site boundary is 100 meters.
- 100% of the fuel rods have ruptured. This assumption is conservative because it results in the greatest potential release of radioactive material.

- Unchoked flow correlations were used as the unchoked flow correlations better approximate the true measured flowrate for the leakage rates associated with transportation packages.

- For conservatism, the upstream pressure at *reference* test conditions (inside of the MPC) is assumed to be *2 ATM* and the down stream pressure (outside of the MPC) is assumed to be 1 *ATM*.

- *The leak hole diameter is determined using reference test conditions rather than actual test conditions from Table 7.3.7. This is conservative, as it yields a larger leak hole diameter.*

- The temperature at test conditions is assumed to be equal to an ambient reference temperature, 212° F based on the maximum temperature achievable by the water in the MPC during performance of the leak test. This is conservative because the leak hole diameter computed from test conditions is larger.

- Bounding accident conditions (i.e., MPC cavity ~~at design~~ pressure *of 225 psig* (*which is above the design pressure of* ~~125~~*200* psig) at peak cladding temperature limit (570° C)) are postulated for this analysis.

- The capillary length required for Equation 7-3 was conservatively chosen to be the MPC lid closure weld which is 1.9 cm.

- The majority of the activity associated with crud is due to ^{60}Co. This assumption follows from the discussion provided in NUREG/CR-6487 [7.3.2].

- The accident condition leakage rate persists for 30 days without a decrease in the rate or nuclide concentration.

- The individual at the site boundary is exposed for 720 hours (30 days). This conservatively assumes that the individual is exposed 24 hours per day for 30 days.

- A breathing rate of 3.3 x 10^{-4} m^3/sec for a worker is used for the analysis [7.0.2]. This assumption is in accordance with the guidance provided in NUREG-1536 for a worker.

- All fuel stored in the MPC is of the design basis type with a bounding burnup and cooling time.

- Exposure to dose conversion factors for inhalation reported in EPA Federal Guidance Report No. 11, Table 2.1 [7.3.5] were selected by ~~lung clearance class which reports~~ the most *restrictive clearance class for each organ and each radionuclide* ~~conservative values~~.

- For conservativism, the maximum possible leakage rate *at reference test conditions* is assumed to be 7.5x10^{-5} atm-cm^3/s, which is 150% of the test leak rate of 5.0x10^{-6} atm-cm^3/s.

Table 7.3.1
Isotope Inventory and Release Fraction

Nuclide	MPC-24 *MPC-24E MPC-24EF MPC-32* Ci/Assembly	MPC-68 *MPC-68FF* Ci/Assembly	MPC-68F Ci/Assembly	Release Fraction [7.3.2]
Gases				
^{3}H	*3.68~~2.21~~*E+02	*1.24~~8.72~~*E+02~~1~~	1.78E+01	0.30
^{129}I	*3.31~~1.93~~*E-02	*1.12~~7.72~~*E-02~~3~~	3.49E-03	0.30
^{85}Kr	*5.86~~3.75~~*E+03	*2.04~~1.43~~*E+03	2.37E+02	0.30
Crud				
^{60}Co	2.18E+01	6.50E+01	1.18E+01	0.15 normal/off-normal 1.0 accident
Volatiles				
^{90}Sr	*6.32~~3.91~~*E+04	*2.24~~1.52~~*E+04	4.29E+03	2.0E-04
^{106}Ru	*1.59~~1.18~~*E+04	*4.71~~4.16~~*E+03	2.30E-01	2.0E-04
^{134}Cs	*4.04~~1.90~~*E+04	*1.18~~7.20~~*E+04~~3~~	3.16E+01	2.0E-04
^{137}Cs	*9.82~~5.77~~*E+04	*3.35~~2.29~~*E+04	7.21E+03	2.0E-04
Fines				
^{241}Pu	*8.53~~6.33~~*E+04	*2.58~~2.10~~*E+04	5.16E+03	3.0 E-05
^{90}Y	*6.32~~3.91~~*E+04	*2.24~~1.52~~*E+04	4.29E+03	3.0 E-05
^{147}Pm	*2.63~~2.48~~*E+04	*9.63~~8.88~~*E+03	1.18E+02	3.0 E-05
^{144}Ce	*8.14~~7.97~~*E+03	*2.48~~2.46~~*E+03	--	3.0 E-05
^{144}Pr	*8.14~~7.97~~*E+03	*2.48~~2.46~~*E+03	--	3.0 E-05
^{154}Eu	*5.90~~2.89~~*E+03	*1.74~~1.07~~*E+03	1.44E+02	3.0 E-05
^{244}Cm	*1.01~~2.06~~*+04~~3~~	*2.38~~9.30~~*E+03~~2~~	2.17E+02	3.0 E-05
^{238}Pu	*5.81~~1.98~~*E+03	*1.58~~7.49~~*E+03~~2~~	2.50E+02	3.0 E-05
^{125}Sb	*2.30~~1.57~~*E+03	*7.91~~6.40~~*E+02	--	3.0 E-05
^{155}Eu	*1.65~~8.53~~*E+03~~2~~	*5.41~~3.51~~*E+02	--	3.0 E-05

Table 7.3.1
(continued)

Isotope Inventory and Release Fractions

Nuclide	MPC-24 *MPC-24E* *MPC-24EF* *MPC-32* Ci/Assembly	MPC-68 *MPC-68FF* Ci/Assembly	MPC-68F Ci/Assembly	Release Fraction [7.3.2]
^{241}Am	*9.00~~6.46~~*E+02	*2.78~~2.20~~*E+02	2.52E+02	3.0 E-05
^{125m}Te	*5.61~~3.84~~*E+02	*1.93~~1.56~~*E+02	--	3.0 E-05
^{240}Pu	*4.05~~3.06~~*E+02	*1.50~~1.26~~*E+02	6.81E+01	3.0 E-05
^{151}Sm	*3.38~~2.37~~*E+02	*9.76E+01–*		3.0 E-05
^{239}Pu	*2.04~~1.86~~*E+02	*6.70~~6.16~~*E+01	2.95E+01	3.0 E-05
^{137m}Ba	*9.27~~5.44~~*E+04	*3.17~~2.16~~*E+04	6.81E+03	3.0 E-05
^{106}Rh	*1.59~~1.18~~*E+04	*4.71~~4.16~~*E+03	--	3.0 E-05
^{144m}Pr	*1.14~~1.12~~*E+02	*3.48E+01–*	--	3.0 E-05
^{243}Am	*4.87~~1.73~~*E+01	*1.36~~7.39~~*E+0*1~~0~~*	3.30E+00	3.0 E-05
^{242}Cm	*3.23~~1.54~~*E+01	*9.82~~6.10~~*E+00	7.71E-01	3.0 E-05
^{243}Cm	*3.63~~1.14~~*E+01	*9.79~~4.81~~*E+00	1.54E+00	3.0 E-05
^{239}Np	*4.87~~1.73~~*E+01	*1.36~~7.39~~*E+0*1~~0~~*	3.30E+00	3.0 E-05
^{237}Np	*3.88E-01*	*1.18E-01*	*2.72E-02*	*3.0 E-05*
^{242}Pu	*2.85E+00*	*9.04E-01*	*3.06E-01*	*3.0 E-05*
^{242}Am	*8.72E+00*	*2.71E+00*	*9.31E-01*	*3.0 E-05*
^{242m}Am	*8.76E+00*	*2.72E+00*	*9.35E-01*	*3.0 E-05*

Note: The isotopes which contribute greater than 0.1% to the total curie inventory for the fuel assembly are considered in the evaluation as fines. The analysis also includes actinides as the dose conversion factors for these isotopes are in general, orders of magnitude greater than other isotopes (e.g., isotopes of plutonium, americium, curium, and neptunium were included regardless of their contribution to the inventory).

Table 7.3.2

MPC-24, MPC-24E and MPC-24EF
Postulated Doses
To An Individual at the Controlled Area Boundary (100 meters)
As a Result of an Assumed Effluent Release
Normal Conditions [mrem/yr]

	Gonad	Breast	Lung	Red Marrow	Bone Surface	Thyroid
CDE	1.45E-02	1.73E-02	5.89E-01	8.90E-02	6.42E-01	1.56E-02
DDE	3.26E-04	3.68E-04	3.28E-04	3.25E-04	4.75E-04	3.36E-04
ADE	1.48E-02	1.77E-02	5.89E-01	8.93E-02	6.42E-01	1.59E-02

	Skin/Extremity
SDE	8.34E-04

	Whole Body
CEDE	1.14E-01
DDE	3.34E-04
ADE	1.14E-01

Off-Normal Conditions [mrem/yr]

	Gonad	Breast	Lung	Red Marrow	Bone Surface	Thyroid
CDE	5.24E-02	2.47E-02	1.68E+00	3.58E-01	2.91E+00	2.34E-02
DDE	3.82E-04	4.33E-04	3.84E-04	3.80E-04	5.71E-04	3.94E-04
ADE	5.28E-02	2.51E-02	1.68E+00	3.58E-01	2.91E+00	2.38E-02

	Skin/Extremity
SDE	2.52E-03

	Whole Body
CEDE	3.46E-01
DDE	3.91E-04
ADE	3.46E-01

Accident Conditions [mrem/30 days]

	Gonad	Breast	Lung	Red Marrow	Bone Surface	Thyroid
CDE	3.21E+00	1.32E+00	1.00E+02	2.21E+01	1.82E+02	1.27E+00
DDE	1.93E-02	2.19E-02	1.94E-02	1.91E-02	2.90E-02	1.99E-02
ADE	3.23E+00	1.34E+00	1.00E+02	2.21E+01	1.82E+02	1.29E+00

	Skin/Extremity
SDE	1.52E-01

	Whole Body
CEDE	2.09E+01
DDE	1.98E-02
ADE	2.09E+01

Table 7.3.3

MPC-32
Postulated Doses
To An Individual at the Controlled Area Boundary (100 meters)
As a Result of an Assumed Effluent Release

Normal Conditions [mrem/yr]

	Gonad	Breast	Lung	Red Marrow	Bone Surface	Thyroid
CDE	2.03E-02	2.43E-02	8.24E-01	1.25E-01	8.99E-01	2.19E-02
DDE	4.56E-04	5.16E-04	4.59E-04	4.55E-04	6.65E-04	4.71E-04
ADE	2.08E-02	2.48E-02	8.24E-01	1.25E-01	9.00E-01	2.24E-02

	Skin/Extremity
SDE	1.17E-03

	Whole Body
CEDE	1.59E-01
DDE	4.67E-04
ADE	1.59E-01

Off-Normal Conditions [mrem/yr]

	Gonad	Breast	Lung	Red Marrow	Bone Surface	Thyroid
CDE	7.34E-02	3.46E-02	2.34E+00	5.01E-01	4.08E+00	3.28E-02
DDE	5.35E-04	6.06E-04	5.38E-04	5.31E-04	7.99E-04	5.51E-04
ADE	7.39E-02	3.52E-02	2.34E+00	5.02E-01	4.08E+00	3.34E-02

	Skin/Extremity
SDE	3.53E-03

	Whole Body
CEDE	4.85E-01
DDE	5.48E-04
ADE	4.86E-01

Accident Conditions [mrem/30 days]

	Gonad	Breast	Lung	Red Marrow	Bone Surface	Thyroid
CDE	4.49E+00	1.84E+00	1.40E+02	3.09E+01	2.54E+02	1.77E+00
DDE	2.70E-02	3.06E-02	2.71E-02	2.68E-02	4.06E-02	2.78E-02
ADE	4.52E+00	1.87E+00	1.40E+02	3.09E+01	2.54E+02	1.80E+00

	Skin/Extremity
SDE	2.12E-01

	Whole Body
CEDE	2.91E+01
DDE	2.76E-02
ADE	2.91E+01

Table 7.3.4
MPC-68 and MPC-68FF
Postulated Doses
To An Individual at the Controlled Area Boundary (100 meters)
As a Result of an Assumed Effluent Release

Normal Conditions [mrem/yr]

	Gonad	Breast	Lung	Red Marrow	Bone Surface	Thyroid
CDE	4.54E-02	1.42E-01	2.95E+00	2.00E-01	6.37E-01	1.26E-01
DDE	2.86E-03	3.23E-03	2.88E-03	2.86E-03	4.14E-03	2.95E-03
ADE	4.83E-02	1.45E-01	2.95E+00	2.03E-01	6.41E-01	1.29E-01

	Skin/Extremity
SDE	3.85E-03

	Whole Body
CEDE	5.12E-01
DDE	2.93E-03
ADE	5.15E-01

Off-Normal Conditions [mrem/yr]

	Gonad	Breast	Lung	Red Marrow	Bone Surface	Thyroid
CDE	7.81E-02	1.50E-01	4.07E+00	4.48E-01	2.56E+00	1.33E-01
DDE	2.91E-03	3.29E-03	2.93E-03	2.91E-03	4.23E-03	3.01E-03
ADE	8.10E-02	1.53E-01	4.07E+00	4.51E-01	2.56E+00	1.36E-01

	Skin/Extremity
SDE	5.65E-03

	Whole Body
CEDE	7.32E-01
DDE	2.98E-03
ADE	7.35E-01

Accident Conditions [mrem/30 days]

	Gonad	Breast	Lung	Red Marrow	Bone Surface	Thyroid
CDE	4.34E+00	7.29E+00	2.16E+02	2.60E+01	1.58E+02	6.52E+00
DDE	1.40E-01	1.58E-01	1.41E-01	1.40E-01	2.04E-01	1.45E-01
ADE	4.48E+00	7.45E+00	2.16E+02	2.61E+01	1.58E+02	6.67E+00

	Skin/Extremity
SDE	3.03E-01

	Whole Body
CEDE	3.91E+01
DDE	1.44E-01
ADE	3.92E+01

Table 7.3.5

MPC-68F
Postulated Doses
To An Individual at the Controlled Area Boundary (100 meters)
As a Result of an Assumed Effluent Release

Normal Conditions [mrem/yr]

	Gonad	Breast	Lung	Red Marrow	Bone Surface	Thyroid
CDE	7.31E-03	2.56E-02	5.00E-01	2.94E-02	6.38E-01	2.25E-02
DDE	5.16E-04	5.84E-04	5.21E-04	5.16E-04	7.47E-04	5.33E-04
ADE	7.83E-03	2.62E-02	5.01E-01	2.99E-02	6.39E-01	2.30E-02

	Skin/Extremity
SDE	6.31E-04

	Whole Body
CEDE	8.65E-02
DDE	5.29E-04
ADE	8.70E-02

Off-Normal Conditions [mrem/yr]

	Gonad	Breast	Lung	Red Marrow	Bone Surface	Thyroid
CDE	1.37E-02	2.66E-02	7.03E-01	7.95E-02	4.70E-01	2.35E-02
DDE	5.18E-04	5.86E-04	5.23E-04	5.18E-04	7.51E-04	5.35E-04
ADE	1.42E-02	2.72E-02	7.04E-01	8.00E-02	4.71E-01	2.40E-02

	Skin/Extremity
SDE	8.36E-04

	Whole Body
CEDE	1.29E-01
DDE	5.31E-04
ADE	1.30E-01

Accident Conditions [mrem/30 days]

	Gonad	Breast	Lung	Red Marrow	Bone Surface	Thyroid
CDE	8.26E-01	1.29E+00	3.89E+01	5.12E+00	3.32E+01	1.15E+00
DDE	2.48E-02	2.80E-02	2.50E-02	2.48E-02	3.59E-02	2.56E-02
ADE	8.51E-01	1.32E+00	3.89E+01	5.14E+00	3.32E+01	1.18E+00

	Skin/Extremity
SDE	4.53E-02

	Whole Body
CEDE	7.26E+00
DDE	2.54E-02
ADE	7.29E+00

Table 7.3.6
χ/Q Parameters

Parameter	Value	Reference
U	1 m/s	NUREG-1536 [7.0.2]
σ_y	4.0 m	Figure 1, Reg Guide 1.145 [7.3.4]
σ_z	2.5 m	Figure 2, Reg Guide 1.145 [7.3.4]
$\Sigma_y = M\ \sigma_y$	16	M is determined from Figure 3, Reg Guide 1.145 [7.3.4]
A	8.41 m^2	Chapter 1, Section 1.5

Table 7.3.7

Parameters for Test, *Normal/Off-Normal and* Hypothetical Accident Conditions

Parameter	Reference Test	*Actual Test*	Normal/Off-Normal[1]	Hypothetical Accident
P_u	2 ATM (min)	*6.78 ATM (min)*	*6.905~~.44~~* ATM	*16.319~~.5~~* ATM
P_d	1 ATM	*1 ATM*	1 ATM	1 ATM
T	373 K	*373 K*	*581~~510~~* K	843 K
M	4 g/mol	*4 g/mol*	4 g/mol	4 g/mol
u (helium)	0.0231 cP	*0.0231 cP*	0.0~~287~~*309* cP	0.0397 cP
a	1.9 cm	*1.9 cm*	1.9 cm	1.9 cm

[1]*The values in this column are for the off-normal condition. They uniformly bound the normal condition values.*

Table 7.3.8

Postulated Bounding Doses Compared to Regulatory Limits
To An Individual at the Controlled Area Boundary (100 meters)
As a Result of an Assumed Effluent Release

	BWR	*PWR*	*Regulatory Limit*
10CFR72.104(a) - Normal			
Whole body ADE	*0.515 mrem*	*0.159 mrem*	*25 mrem*
Thyroid ADE	*0.129 mrem*	*0.022 mrem*	*75 mrem*
Critical Organ ADE (Max)	*2.95 mrem*	*0.900 mrem*	*25mrem*
10CFR72.104(a) - Off-normal			
Whole body ADE	*0.735 mrem*	*0.486 mrem*	*25 mrem*
Thyroid ADE	*0.136 mrem*	*0.033 mrem*	*75 mrem*
Critical Organ ADE (Max)	*4.07 mrem*	*4.08 mrem*	*25mrem*
10CFR72.106(b) - Accident			
TEDE	*39.2 mrem*	*29.1 mrem*	*5 rem*
TODE=DDE+CDE (Max)	*216 mrem*	*254 mrem*	*50 rem*
LDE	*0.540 mrem*	*0.732 mrem*	*15 rem*
SDE	*0.303 mrem*	*0.212 mrem*	*50 rem*

ADE: Annual Dose Equivalent
TEDE: Total Effective Dose Equivalent
TODE: Total Organ Dose Equivalent
DDE: Deep Dose Equivalent
CDE: Committed Dose Equivalent
LDE: Lens Dose Equivalent
SDE: Shallow Dose Equivalent

7.4 REFERENCES

[7.0.1] 10CFR72, Licensing Requirements for the Independent Storage of Spent Nuclear Fuel and High-Level Radioactive Waste.

[7.0.2] NUREG-1536, "Standard Review Plan for Dry Cask Storage Systems", January, 1997.

[7.1.1] American Society of Mechanical Engineers (ASME), Boiler and Pressure Vessel Code, Section III, Division 1, Subsection NB, Class 1 Components, 1995 Edition.

[7.2.1] Interim Staff Guidance-11, Revision 1, "Transportation and Storage of Spent Fuel Having Burnups in Excess of 45GWD/MTU", May 16, 2000.

[7.2.2] Interim Staff Guidance-5, Revision 1, "Normal, Off-Normal, and Hypothetical Dose Estimate Calculations", June 18, 1999.

[7.3.1] Deleted.

[7.3.2] Anderson, B.L. et al. *Containment Analysis for Type B Packages Used to Transport Various Contents.* NUREG/CR-6487, UCRL-ID-124822. Lawrence Livermore National Laboratory, November 1996.

[7.3.3] Shleien, B, *The Health Physics and Radiological Health Handbook*, Scinta, Inc. Silver Spring, MD, 1992.

[7.3.4] U.S. Nuclear Regulatory Commission, "Atmospheric Dispersement Models for Potential Accident Consequence Assessments at Nuclear Power Plants," Regulatory Guide 1.145, February 1989.

[7.3.5] U.S. EPA, Federal Guidance Report No. 11, *Limiting Values of Radionuclide Intake and Air Concentration and Dose Conversion Factors for Inhalation, Submersion, and Ingestion*, DE89-011065, 1988.

[7.3.6] U.S. EPA, Federal Guidance Report No. 12, *External Exposure to Radionuclides in Air, Water, and Soil*, EPA 402-R-93-081, 1993.

[7.3.7] International Commission on Radiological Protection, Limits for Intakes of Radionuclides by Workers, ICRP Publication 30, Part 1; Pergamon Press; Oxford; 1978.

[7.3.8] ANSI N14.5-1997. "American National Standard for Radioactive Material Leakage Tests on Packages for Shipment."

[7.3.9] Rosenhow, W.M.. and Hartnett, J.P., *Handbook of Heat Transfer*, McGraw Hill Book Company, New York, 1973.

[7.3.10] Turner, James E. *Atoms, Radiation , and Radiation Protection*, McGraw Hill Book Company, New York, 1992.

[7.3.11] Rashid, Y.R., et al, "An Estimate of the Contribution of Spent Fuel Products to the Releaseable Source Term in Spent Fuel Transportation Casks," SAND88-2778C, Sandia National Laboratories, 1988