# HI-STORM 100 FSAR TABLE OF CONTENTS


**CHAPTER 1: GENERAL DESCRIPTION** ..... 1.0-1

1.0 GENERAL INFORMATION ..... 1.0-1

1.1 INTRODUCTION ..... 1.1-1

1.2 GENERAL DESCRIPTION OF HI-STORM 100 SYSTEM ..... 1.2-1
- 1.2.1 System Characteristics ..... 1.2-1
  - 1.2.1.1 Multi-Purpose Canisters ..... 1.2-2
  - 1.2.1.2 Overpacks ..... 1.2-6
    - 1.2.1.2.1 HI-STORM 100 Overpack (Storage) ..... 1.2-6
    - 1.2.1.2.2 HI-TRAC (Transfer Cask) ..... 1.2-9
  - 1.2.1.3 Shielding Materials ..... 1.2-10
    - 1.2.1.3.1 Boral Neutron Absorber ..... 1.2-11
    - 1.2.1.3.2 Neutron Shielding ..... 1.2-13
    - 1.2.1.3.3 Gamma Shielding Material ..... 1.2-15
  - 1.2.1.4 Lifting Devices ..... 1.2-15
  - 1.2.1.5 Design Life ..... 1.2-16
- 1.2.2 Operational Characteristics ..... 1.2-17
  - 1.2.2.1 Design Features ..... 1.2-17
  - 1.2.2.2 Sequence of Operations ..... 1.2-17
  - 1.2.2.3 Identification of Subjects for Safety and Reliability Analysis ..... 1.2-22
    - 1.2.2.3.1 Criticality Prevention ..... 1.2-22
    - 1.2.2.3.2 Chemical Safety ..... 1.2-23
    - 1.2.2.3.3 Operation Shutdown Modes ..... 1.2-23
    - 1.2.2.3.4 Instrumentation ..... 1.2-23
    - 1.2.2.3.5 Maintenance Technique ..... 1.2-23
- 1.2.3 Cask Contents ..... 1.2-24

1.3 IDENTIFICATION OF AGENTS AND CONTRACTORS ..... 1.3-1

1.4 GENERIC CASK ARRAYS ..... 1.4-1

1.5 GENERAL ARRANGEMENT DRAWINGS ..... 1.5-1

1.6 REFERENCES ..... 1.6-1

APPENDIX 1.A: ALLOY X DESCRIPTION
APPENDIX 1.B: HOLTITE™ MATERIAL DATA
APPENDIX 1.C: MISCELLANEOUS MATERIAL DATA
APPENDIX 1.D: REQUIREMENTS ON HI-STORM 100 SHIELDING CONCRETE

**CHAPTER 2: PRINCIPAL DESIGN CRITERIA** ..... 2.0-1

2.0 PRINCIPAL DESIGN CRITERIA ..... 2.0-1
- 2.0.1 MPC Design Criteria ..... 2.0-1
- 2.0.2 HI-STORM 100 Overpack Design Criteria ..... 2.0-6
- 2.0.3 HI-TRAC Transfer Cask Design Criteria ..... 2.0-9
- 2.0.4 Principal Design Criteria for the ISFSI Pad ..... 2.0-11

2.1 SPENT FUEL TO BE STORED ..... 2.1-1
2.1.1 Determination of The Design Basis Fuel ..... 2.1-1
2.1.2 Intact SNF Specifications ..... 2.1-2
2.1.3 Damaged SNF and Fuel Debris Specifications ..... 2.1-2
2.1.4 Deleted ..... 2.1-3
2.1.5 Structural Parameters for Design Basis SNF ..... 2.1-3
2.1.6 Thermal Parameters for Design Basis SNF ..... 2.1-4
2.1.7 Radiological Parameters for Design Basis SNF ..... 2.1-5
2.1.8 Criticality Parameters for Design Basis SNF ..... 2.1-6
2.1.9 Summary of SNF Design Criteria ..... 2.1-7

2.2 HI-STORM 100 DESIGN CRITERIA ..... 2.2-1
2.2.1 Normal Condition Design Criteria ..... 2.2-2
2.2.1.1 Dead Weight ..... 2.2-2
2.2.1.2 Handling ..... 2.2-2
2.2.1.3 Pressure ..... 2.2-3
2.2.1.4 Environmental Temperatures ..... 2.2-4
2.2.1.5 Design Temperatures ..... 2.2-4
2.2.1.6 Snow and Ice ..... 2.2-5
2.2.2 Off-Normal Conditions Design Criteria ..... 2.2-5
2.2.2.1 Pressure ..... 2.2-6
2.2.2.2 Environmental Temperatures ..... 2.2-6
2.2.2.3 Design Temperatures ..... 2.2-6
2.2.2.4 Leakage of One Seal ..... 2.2-7
2.2.2.5 Partial Blockage of Air Inlets ..... 2.2-7
2.2.2.6 Off-Normal HI-TRAC Handling ..... 2.2-7
2.2.3 Environmental Phenomena and Accident Condition Design Criteria ..... 2.2-8
2.2.3.1 Handling Accident ..... 2.2-8
2.2.3.2 Tip-Over ..... 2.2-10
2.2.3.3 Fire ..... 2.2-11
2.2.3.4 Partial Blockage of MPC Basket Vent Holes ..... 2.2-11
2.2.3.5 Tornado ..... 2.2-12
2.2.3.6 Flood ..... 2.2-13
2.2.3.7 Seismic Design Loadings ..... 2.2-14
2.2.3.8 100% Fuel Rod Rupture ..... 2.2-14
2.2.3.9 Confinement Boundary Leakage ..... 2.2-15
2.2.3.10 Explosion ..... 2.2-15
2.2.3.11 Lightning ..... 2.2-15
2.2.3.12 Burial Under Debris ..... 2.2-15
2.2.3.13 100% Blockage of Air Inlets ..... 2.2-15
2.2.3.14 Extreme Environmental Temperature ..... 2.2-16
2.2.3.15 Bounding Hydraulic, Wind, and Missile Loads for Anchored HI-STORM .. 2.2-16
2.2.4 Applicability of Governing Documents ..... 2.2-17
2.2.5 Service Limits ..... 2.2-18
2.2.6 Loads ..... 2.2-19
2.2.7 Load Combinations ..... 2.2-19
2.2.8 Allowable Stresses ..... 2.2-20

## TABLE OF CONTENTS (continued)


2.3 SAFETY PROTECTION SYSTEMS ..... 2.3-1
2.3.1 General ..... 2.3-1
2.3.2 Protection by Multiple Confinement Barriers and Systems ..... 2.3-2
2.3.2.1 Confinement Barriers and Systems ..... 2.3-2
2.3.2.2 Cask Cooling ..... 2.3-3
2.3.3 Protection by Equipment and Instrumentation Selection ..... 2.3-3
2.3.3.1 Equipment ..... 2.3-3
2.3.3.2 Instrumentation ..... 2.3-16
2.3.4 Nuclear Criticality Safety ..... 2.3-17
2.3.4.1 Control Methods for Prevention of Criticality ..... 2.3-17
2.3.4.2 Error Contingency Criteria ..... 2.3-17
2.3.4.3 Verification Analyses ..... 2.3-18
2.3.5 Radiological Protection ..... 2.3-18
2.3.5.1 Access Control ..... 2.3-18
2.3.5.2 Shielding ..... 2.3-18
2.3.5.3 Radiological Alarm System ..... 2.3-20
2.3.6 Fire and Explosion Protection ..... 2.3-20

2.4 DECOMMISSIONING CONSIDERATIONS ..... 2.4-1

2.5 REGULATORY COMPLIANCE ..... 2.5-1

2.6 REFERENCES ..... 2.6-1

APPENDIX 2.A: GENERAL DESIGN AND CONSTRUCTION REQUIREMENTS FOR THE ISFSI PAD FOR HI-STORM 100A

**CHAPTER 3: STRUCTURAL EVALUATION** ..... 3.0-1

3.1 STRUCTURAL DESIGN ..... 3.1-1
3.1.1 Discussion ..... 3.1-1
3.1.2 Design Criteria ..... 3.1-5
3.1.2.1 Loads and Load Combinations ..... 3.1-8
3.1.2.1.1 Individual Load Cases ..... 3.1-8
3.1.2.1.2 Load Combinations ..... 3.1-13
3.1.2.2 Allowables ..... 3.1-17
3.1.2.3 Brittle Fracture ..... 3.1-19
3.1.2.4 Fatigue ..... 3.1-21
3.1.2.5 Buckling ..... 3.1-21

3.2 WEIGHTS AND CENTERS OF GRAVITY ..... 3.2-1

3.3 MECHANICAL PROPERTIES OF MATERIALS ..... 3.3-1
3.3.1 Structural Materials ..... 3.3-1
3.3.1.1 Alloy X ..... 3.3-1
3.3.1.2 Carbon Steel, Low-Alloy and Nickel Alloy Steel ..... 3.3-2
3.3.1.3 Bolting Materials ..... 3.3-2
3.3.1.4 Weld Material ..... 3.3-2

3.3.2 Nonstructural Materials ..... 3.3-3
3.3.2.1 Solid Neutron Shield ..... 3.3-3
3.3.2.2 Boral™ Neutron Absorber ..... 3.3-3
3.3.2.3 Concrete ..... 3.3-3
3.3.2.4 Lead ..... 3.3-4
3.3.2.5 Aluminum Heat Conduction Elements ..... 3.3-4

3.4 GENERAL STANDARDS FOR CASKS ..... 3.4-1
3.4.1 Chemical and Galvanic Reactions ..... 3.4-1
3.4.2 Positive Closure ..... 3.4-2
3.4.3 Lifting Devices ..... 3.4-2
3.4.3.1 125 Ton HI-TRAC Lifting Analysis - Trunnions ..... 3.4-4
3.4.3.2 125 Ton HI-TRAC Lifting - Trunnion Lifting Block Welds, Bearing, and Thread Shear Stress (Region A) ..... 3.4-5
3.4.3.3 125 Ton HI-TRAC Lifting - Structure near Trunnion (Region B/Region A) ..... 3.4-5
3.4.3.4 100 Ton HI-TRAC Lifting Analysis ..... 3.4-6
3.4.3.5 HI-STORM 100 Lifting Analyses ..... 3.4-8
3.4.3.6 MPC Lifting Analysis ..... 3.4-11
3.4.3.7 Miscellaneous Lid Lifting Analyses ..... 3.4-11
3.4.3.8 HI-TRAC Pool Lid Analysis - Lifting MPC From the Spent Fuel Pool (Load Case 01 in Table 3.1.5) ..... 3.4-12
3.4.3.9 HI-TRAC Transfer Lid Analysis – Lifting MPC Away From Spent Fuel Pool (Load Case 01 in Table 3.1.5) ..... 3.4-14
3.4.3.10 HI-TRAC Bottom Flange Evaluation during Lift (Load Case 01 in Table 3.1.5) ..... 3.4-15
3.4.3.11 Conclusion ..... 3.4-16
3.4.4 Heat ..... 3.4-16
3.4.4.1 Summary of Pressures and Temperatures ..... 3.4-16
3.4.4.2 Differential Thermal Expansion ..... 3.4-16
3.4.4.2.1 Normal Hot Environment ..... 3.4-16
3.4.4.2.2 Fire Accident ..... 3.4-19
3.4.4.3 Stress Calculations ..... 3.4-20
3.4.4.3.1 MPC Stress Calculations ..... 3.4-21
3.4.4.3.2 HI-STORM 100 Storage Overpack Stress Calculations ..... 3.4-34
3.4.4.3.3 HI-TRAC Transfer Cask Stress Calculations ..... 3.4-42
3.4.4.4 Comparison with Allowable Stresses ..... 3.4-51
3.4.4.4.1 MPC ..... 3.4-51
3.4.4.4.2 Storage Overpack and HI-TRAC ..... 3.4-53
3.4.4.5 Elastic Stability Considerations ..... 3.4-53
3.4.4.5.1 MPC Elastic Stability ..... 3.4-53
3.4.4.5.2 HI-STORM 100 Overpack Elastic Stability ..... 3.4-53
3.4.5 Cold ..... 3.4-55
3.4.6 HI-STORM 100 Kinematic Stability Under Flood Condition (Load Case A in Table 3.1.1) ..... 3.4-56
3.4.7 Seismic Event and Explosion - HI-STORM 100 ..... 3.4-59
3.4.7.1 Seismic Event (Load Case C in Table 3.1.1) ..... 3.4-59
3.4.7.2 Explosion (Load Case 05 in Table 3.1.5) ..... 3.4-69
3.4.7.3 Anchored HI-STORM Systems Under High-Seismic DBE (Load Case C in Table 3.1.1) ..... 3.4-72

3.4.8 Tornado Wind and Missile Impact (Load Case B in Table 3.1.1 and Load Case 04 in Table 3.1.5) ..... 3.4-81
3.4.8.1 HI-STORM 100 Storage Overpack ..... 3.4-82
3.4.8.2 HI-TRAC Transfer Cask ..... 3.4-85
3.4.8.2.1 Intermediate Missile Strike ..... 3.4-85
3.4.8.2.2 Large Missile Strike ..... 3.4-88
3.4.9 HI-TRAC Drop Events (Load Case 02.b in Table 3.1.5) ..... 3.4-89
3.4.9.1 Working Model 2D Analysis of Drop Event ..... 3.4-90
3.4.9.2 DYNA3D Analysis of Drop Event ..... 3.4-91
3.4.10 HI-STORM 100 Non-Mechanistic Tip-Over and Vertical Drop Event (Load Cases 02.a and 0.2c in Table 3.1.5) ..... 3.4-94
3.4.11 Storage Overpack and HI-TRAC Transfer Cask Service Life ..... 3.4-97
3.4.11.1 Storage Overpack ..... 3.4-97
3.4.11.2 Transfer Cask ..... 3.4-98
3.4.12 MPC Service Life ..... 3.4-99
3.4.13 Design and Service Life ..... 3.4-101

3.5 FUEL RODS ..... 3.5-1

3.6 SUPPLEMENTAL DATA ..... 3.6-1
3.6.1 Additional Codes and Standards Referenced in HI-STORM 100 System Design and Fabrication ..... 3.6-1
3.6.2 Computer Programs ..... 3.6-7
3.6.3 Appendices Included in Chapter 3 ..... 3.6-8
3.6.4 Calculation Package ..... 3.6-10

3.7 COMPLIANCE TO NUREG-1536 ..... 3.7-1

3.8 REFERENCES ..... 3.8-1

APPENDIX 3.A HI-STORM DECELERATION UNDER POSTULATED VERTICAL DROP EVENT AND TIPOVER
APPENDIX 3.B HI-STORM 100 OVERPACK DEFORMATION IN NON-MECHANISTIC TIPOVER EVENT
APPENDIX 3.C RESPONSE OF CASK TO TORNADO WIND LOAD AND LARGE MISSILE IMPACT
APPENDIX 3.D VERTICAL HANDLING OF OVERPACK WITH HEAVIESTMPC
APPENDIX 3.E LIFTING TRUNNION STRESS ANALYSIS FOR HI-TRAC
APPENDIX 3.F LEAD SLUMP ANALYSIS (HI-TRAC SIDE DROP)
APPENDIX 3.G MISSILE PENETRATION ANALYSIS FOR HI-STORM 100
APPENDIX 3.H MISSILE PENETRATION ANALYSES FOR HI-TRAC
APPENDIX 3.I HI-TRAC FREE THERMAL EXPANSIONS
APPENDIX 3.J DELETED
APPENDIX 3.K HI-STORM TIPOVER – LID ANALYSIS
APPENDIX 3.L HI-STORM LID TOP PLATE BOLTING
APPENDI X 3.M VERTICAL DROP OF OVERPACK
APPENDIX 3.N DELETED
APPENDIX 3.O DELETED
APPENDIX 3.P DELETED
APPENDIX 3.Q DELETED

| | |
|---|---|
| APPENDIX 3.R | DELETED |
| APPENDIX 3.S | DELETED |
| APPENDIX 3.T | DELETED |
| APPENDIX 3.U | HI-STORM 100 COMPONENT THERMAL EXPANSIONS – MPC-24 |
| APPENDIX 3.V | DELETED |
| APPENDIX 3.W | HI-STORM 100 COMPONENT THERMAL EXPANSIONS – MPC-68 |
| APPENDIX 3.X | CALCULATION OF DYNAMIC LOAD FACTORS |
| APPENDIX 3.Y | MISCELLANEOUS CALCULATIONS |
| APPENDIX 3.Z | HI-TRAC HORIZONTAL DROP ANALYSIS |
| APPENDIX 3.AA | HI-TRAC 125 – ROTATION TRUNNION WELD ANALYSIS |
| APPENDIX 3.AB | HI-TRAC POOL LID STRESSES AND CLOSURE ANALYSIS |
| APPENDIX 3.AC | LIFTING CALCULATIONS |
| APPENDIX 3.AD | 125 TON HI-TRAC TRANSFER LID STRESS ANALYSES |
| APPENDIX 3.AE | GLOBAL ANALYSIS OF HI-TRAC LIFT |
| APPENDIX 3.AF | MPC TRANSFER FROM HI-TRAC TO HI-STORM 100 UNDER COLD CONDITIONS OF STORAGE |
| APPENDIX 3.AG | STRESS ANALYSIS OF THE HI-TRAC WATER JACKET |
| APPENDIX 3.AH | HI-TRAC TOP LID SEPARATION ANALYSES |
| APPENDIX 3.AI | HI-TRAC 100 ROTATION TRUNNION WELD ANALYSIS |
| APPENDIX 3.AJ | 100 TON HI-TRAC TRANSFER LID STRESS ANALYSES |
| APPENDIX 3.AK | CODE CASE N-284 STABILITY CALCULATIONS |
| APPENDIX 3.AL | HI-TRAC LUMPED PARAMETERS FOR SIDE DROP ANALYSIS |
| APPENDIX 3.AM | HI-TRAC 100 TRANSFER CASK CIRCUMFERENTIAL DEFORMATION AND STRESS |
| APPENDIX 3.AN | DYNA3D ANALYSES OF HI-TRAC SIDE DROPS AND IMPACT BY A LARGE TORNADO MISSILE |
| APPENDIX 3.AO | NOT USED |
| APPENDIX 3.AP | NOT USED |
| APPENDIX 3.AQ | HI-STORM 100 COMPONENT THERMAL EXPANSIONS; MPC-24E |
| APPENDIX 3.AR | ANALYSIS OF TRANSNUCLEAR DAMAGED FUEL CANISTER AND THORIA ROD CANISTER |
| APPENDIX 3.AS | ANALYSIS OF GENERIC PWR AND BWR DAMAGED FUEL CONTAINERS |

**CHAPTER 4: THERMAL EVALUATION** ..... 4.0-1

4.1 DISCUSSION ..... 4.1-1

4.2 SUMMARY OF THERMAL PROPERTIES OF MATERIALS ..... 4.2-1

4.3 SPECIFICATIONS FOR COMPONENTS ..... 4.3-1
- 4.3.1 Evaluation of Zircaloy Clad Fuel ..... 4.3-1
  - 4.3.1.1 Cladding Temperature Limits (DCCG Criteria) ..... 4.3-2
  - 4.3.1.2 Permissible Cladding Temperatures (PNL Method) ..... 4.3-6
- 4.3.2 Evaluation of Stainless Steel Clad Fuel ..... 4.3-8
- 4.3.3 Short-Term Cladding Temperature Limit ..... 4.3-9

4.4 THERMAL EVALUATION FOR NORMAL CONDITIONS OF STORAGE ..... 4.4-1
4.4.1 Thermal Model ..... 4.4-1
4.4.1.1 Analytical Model - General Remarks ..... 4.4-1
4.4.1.1.1 Overview of the Thermal Model ..... 4.4-3
4.4.1.1.2 Fuel Region Effective Thermal Conductivity Calculation ..... 4.4-5
4.4.1.1.3 Effective Thermal Conductivity of Boral/ Sheathing/Box Wall Sandwich ..... 4.4-8
4.4.1.1.4 Finite Element Modeling of Basket In-Plane Conductive Heat Transport ..... 4.4-9
4.4.1.1.5 Heat Transfer in MPC Basket Peripheral Region ..... 4.4-11
4.4.1.1.6 Effective Thermal Conductivity of Flexible MPC Basket-to-Shell Aluminum Heat Conduction Elements ..... 4.4-12
4.4.1.1.7 Annulus Air Flow and Heat Exchange ..... 4.4-14
4.4.1.1.8 Determination of Solar Heat Input ..... 4.4-17
4.4.1.1.9 FLUENT Model for HI-STORM ..... 4.4-18
4.4.1.1.10 Effect of Fuel Cladding Crud Resistance ..... 4.4-23
4.4.1.1.11 Thermal Conductivity Calculations with Diluted Backfill Helium ..... 4.4-24
4.4.1.1.12 Thermal Conductivity Calculations with Diluted Backfill Helium ..... 4.4-25
4.4.1.1.13 HI-STORM Temperature Field with Low Heat Emitting Fuel 4.4-27
4.4.1.2 Test Model ..... 4.4-28
4.4.2 Maximum Temperatures ..... 4.4-28
4.4.3 Minimum Temperatures ..... 4.4-31
4.4.4 Maximum Internal Pressure ..... 4.4-31
4.4.5 Maximum Thermal Stresses ..... 4.4-32
4.4.6 Evaluation of System Performance for Normal Conditions of Storage ..... 4.4-33

4.5 THERMAL EVALUATION FOR NORMAL HANDLING AND ONSITE TRANSPORT ..... 4.5-1
4.5.1 Thermal Model ..... 4.5-1
4.5.1.1 Analytical Model ..... 4.5-2
4.5.1.1.1 Effective Thermal Conductivity of Water Jacket ..... 4.5-3
4.5.1.1.2 Heat Rejection from Overpack Exterior Surfaces ..... 4.5-3
4.5.1.1.3 Determination of Solar Heat Input ..... 4.5-4
4.5.1.1.4 MPC Temperatures during Vacuum Drying Operations ..... 4.5-4
4.5.1.1.5 Maximum Time Limit During Wet Transfer Operations ..... 4.5-5
4.5.1.1.6 Cask Cooldown and Reflood Analysis During Fuel Unloading Operation ..... 4.5-7
4.5.1.1.7 Study of Lead-to-Steel Gaps on Predicted Temperatures. ..... 4.5-9
4.5.1.2 Test Model ..... 4.5-12
4.5.2 Maximum Temperatures ..... 4.5-12
4.5.2.1 Maximum Temperatures Under Onsite Transport Conditions ..... 4.5-12
4.5.2.2 Maximum MPC Basket Temperature Under Vacuum Conditions ..... 4.5-14
4.5.3 Minimum Temperatures ..... 4.5-14

4.5.4 Maximum Internal Pressure ..... 4.5-14
4.5.5 Maximum Thermal Stresses ..... 4.5-15
4.5.6 Evaluation of System Performance for Normal Conditions of Handling and Onsite Transport ..... 4.5-15

4.6 REGULATORY COMPLIANCE ..... 4.6-1
4.6.1 Normal Conditions of Storage ..... 4.6-1
4.6.2 Normal Handling and Onsite Transfer ..... 4.6-2

4.7 REFERENCES ..... 4.7-1

APPENDIX 4.A CLAD TEMPERATURE LIMITS FOR HIGH-BURNUP FUEL
APPENDIX 4.B CONSERVATISMS IN THE THERMAL ANALYSIS OF THE HI-STORM 100 SYSTEM

**CHAPTER 5: SHIELDING EVALUATION** ..... 5.0-1

5.0 INTRODUCTION ..... 5.0-1

5.1 DISCUSSION AND RESULTS ..... 5.1-1
5.1.1 Normal and Off-Normal Operations ..... 5.1-4
5.1.2 Accident Conditions ..... 5.1-9

5.2 SOURCE SPECIFICATION ..... 5.2-1
5.2.1 Gamma Source ..... 5.2-2
5.2.2 Neutron Source ..... 5.2-4
5.2.3 Stainless Steel Clad Fuel Source ..... 5.2-5
5.2.4 Control Components ..... 5.2-6
5.2.4.1 BPRAs and TPDs ..... 5.2-6
5.2.4.2 CRAs and APSRs ..... 5.2-7
5.2.5 Choice of Design Basis Assembly ..... 5.2-9
5.2.5.1 PWR Design Basis Assembly ..... 5.2-9
5.2.5.2 BWR Design Basis Assembly ..... 5.2-10
5.2.5.3 Decay Heat Loads ..... 5.2-12
5.2.6 Thoria Rod Canister ..... 5.2-13
5.2.7 Fuel Assembly Neutron Sources ..... 5.2-13
5.2.8 Stainless Steel Channels ..... 5.2-13

5.3 MODEL SPECIFICATIONS ..... 5.3-1
5.3.1 Description of the Radial and Axial Shielding Configuration ..... 5.3-1
5.3.1.1 Fuel Configuration ..... 5.3-4
5.3.1.2 Streaming Considerations ..... 5.3-4
5.3.2 Regional Densities ..... 5.3-5

5.4 SHIELDING EVALUATION ..... 5.4-1
5.4.1 Streaming Through Radial Steel Fins and Pocket Trunnions and Azimuthal Variations ..... 5.4-4
5.4.2 Damaged Fuel Post-Accident Shielding Evaluation ..... 5.4-6
5.4.3 Site Boundary Evaluation ..... 5.4-8
5.4.4 Stainless Steel Clad Fuel Evaluation ..... 5.4-10

5.4.5 Mixed Oxide Fuel Evaluation ..... 5.4-10
5.4.6 Non-Fuel Hardware and Control Components ..... 5.4-11
5.4.7 Dresden Unit 1 Antimony-Beryllium Neutron Sources ..... 5.4-11
5.4.8 Thoria Rod Canister ..... 5.4-13
5.4.9 Regionalized Dose Rate Evaluation ..... 5.4-13

5.5 REGULATORY COMPLIANCE ..... 5.5-1

5.6 REFERENCES ..... 5.6-1

APPENDIX 5.A SAMPLE INPUT FILE FOR SAS2H
APPENDIX 5.B SAMPLE INPUT FILE FOR ORIGEN-S
APPENDIX 5.C SAMPLE INPUT FILE FOR MCNP
APPENDIX 5.D DOSE RATE COMPARISON FOR DIFFERENT COBALT IMPURITY LEVELS

**CHAPTER 6: CRITICALITY EVALUATION** ..... 6.1-1

6.1 DISCUSSION AND RESULTS ..... 6.1-2

6.2 SPENT FUEL LOADING ..... 6.2-1
6.2.1 Definition of Assembly Classes ..... 6.2-1
6.2.2 PWR Fuel Assemblies in the MPC-24 ..... 6.2-2
6.2.3 BWR Fuel Assemblies in the MPC-68 ..... 6.2-4
6.2.4 Damaged BWR Fuel Assemblies and BWR Fuel Debris ..... 6.2-6
6.2.5 Thoria Rod Canister ..... 6.2-8

6.3 MODEL SPECIFICATION ..... 6.3-1
6.3.1 Description of Calculational Model ..... 6.3-1
6.3.2 Cask Regional Densities ..... 6.3-3

6.4 CRITICALITY CALCULATIONS ..... 6.4-1
6.4.1 Calculational or Experimental Method ..... 6.4-1
6.4.1.1 Basic Criticality Safety Calculations ..... 6.4-1
6.4.2 Fuel Loading or Other Contents Loading Optimization ..... 6.4-2
6.4.2.1 Internal and External Moderation ..... 6.4-2
6.4.2.2 Partial Flooding ..... 6.4-4
6.4.2.3 Clad Gap Flooding ..... 6.4-4
6.4.2.4 Preferential Flooding ..... 6.4-4
6.4.2.5 Design Basis Accidents ..... 6.4-5
6.4.3 Criticality Results ..... 6.4-5
6.4.4 Damaged Fuel and Fuel Debris ..... 6.4-6
6.4.5 Fuel Assemblies with Missing Rods ..... 6.4-12
6.4.6 Thoria Rod Canister ..... 6.4-12
6.4.7 Sealed Rods replacing BWR Water Rods ..... 6.4-12
6.4.8 Non-Fuel Hardware in PWR Fuel Assemblies ..... 6.4-13
6.4.9 Neutron Sources in Fuel Assemblies ..... 6.4-13
6.4.10 Applicability of HI-STAR Analyses to HI-STORM 100 System ..... 6.4-14

6.5 CRITICALITY BENCHMARK EXPERIMENTS ..... 6.5-1

6.6 REGULATORY COMPLIANCE ..... 6.6-1

6.7 REFERENCES ..... 6.7-1

APPENDIX 6.A BENCHMARK CALCULATIONS
APPENDIX 6.B DISTRIBUTED ENRICHMENTS IN BWR FUEL
APPENDIX 6.C CALCULATIONAL SUMMARY
APPENDIX 6.D SAMPLE INPUT FILES

**CHAPTER 7: CONFINEMENT** ..... 7.0-1

7.0 INTRODUCTION ..... 7.0-1

7.1 CONFINEMENT BOUNDARY ..... 7.1-1
7.1.1 Confinement Vessel ..... 7.1-1
7.1.2 Confinement Penetrations ..... 7.1-2
7.1.3 Seals and Welds ..... 7.1-3
7.1.4 Closure ..... 7.1-3
7.1.5 Damaged Fuel Container ..... 7.1-4

7.2 REQUIREMENTS FOR NORMAL CONDITIONS OF STORAGE ..... 7.2-1
7.2.1 Release of Radioactive Material ..... 7.2-1
7.2.2 Pressurization of the Confinement Vessel ..... 7.2-1
7.2.3 Confinement Integrity During Dry Storage ..... 7.2-2
7.2.4 Control of Radioactive Material During Fuel Loading Operations ..... 7.2-2
7.2.5 External Contamination Control ..... 7.2-3
7.2.6 Confinement Vessel Releasable Source Term ..... 7.2-3
7.2.7 Release of Contents Under Normal Storage Conditions ..... 7.2-4
7.2.7.1 Confinement Boundary Leakage Rate ..... 7.2-4
7.2.7.2 Percentage of Nuclides that Remain Airborne ..... 7.2-4
7.2.7.3 Fraction of Volume Released ..... 7.2-4
7.2.7.4 Release Fraction ..... 7.2-4
7.2.7.5 Radionuclide Release Rate ..... 7.2-4
7.2.7.6 Atmospheric Dispersion Factor ..... 7.2-5
7.2.7.7 Dose Conversion Factors ..... 7.2-5
7.2.7.8 Occupancy Time ..... 7.2-5
7.2.7.9 Breathing Rate ..... 7.2-5
7.2.8 Postulated Doses Under Normal Conditions of Storage ..... 7.2-5
7.2.8.1 Whole Body Dose ..... 7.2-6
7.2.8.2 Thryoid Dose ..... 7.2-6
7.2.8.3 Site Boundary ..... 7.2-7
7.2.9 Assumptions ..... 7.2-7

7.3 CONFINEMENT REQUIREMENTS FOR HYPOTHETICAL ACCIDENT CONDITIONS ..... 7.3-1
7.3.1 Confinement Vessel Releasable Source Term ..... 7.3-1
7.3.2 Crud Radionuclides ..... 7.3-2
7.3.3 Release of Contents Under Non-Mechanistic Accident Conditions of Storage ..... 7.3-3

7.3.3.1 Confinement Boundary Leakage Rate ..... 7.3-3
7.3.3.2 Percentage of Nuclides that Remain Airborne ..... 7.3-5
7.3.3.3 Fraction of Volume Released ..... 7.3-5
7.3.3.4 Release Fraction ..... 7.3-5
7.3.3.5 Radionuclide Release Rate ..... 7.3-5
7.3.3.6 Atmospheric Dispersion Factor ..... 7.3-5
7.3.3.7 Dose Conversion Factors ..... 7.3-7
7.3.3.8 Occupancy Time ..... 7.3-7
7.3.3.9 Breathing Rate ..... 7.3-7
7.3.4 Postulated Accident Doses ..... 7.3-7
7.3.4.1 Whole Body Dose (Total Effective Dose Equivalent) ..... 7.3-8
7.3.4.2 Critical Organ Dose ..... 7.3-8
7.3.5 Site Boundary ..... 7.3-9
7.3.6 Assumptions ..... 7.3-9

7.4 REFERENCES ..... 7.4-1

APPENDIX 7.A EXAMPLE DOSE CALCULATIONS FOR NORMAL, OFF-NORMAL. AND ACCIDENT CONDITIONS OF STORAGE

**CHAPTER 8: OPERATING PROCEDURES** ..... 8.0-1

8.0 INTRODUCTION ..... 8.0-1

8.1 PROCEDURE FOR LOADING THE HI-STORM 100 SYSTEM IN THE SPENT FUEL POOL ..... 8.1-1
8.1.1 Overview of Loading Operations ..... 8.1-1
8.1.2 HI-TRAC and HI-STORM Receiving and Handling Operations ..... 8.1-4
8.1.3 HI-TRAC and MPC Receipt Inspection and Loading Preparation ..... 8.1-7
8.1.4 MPC Fuel Loading ..... 8.1-11
8.1.5 MPC Closure ..... 8.1-11
8.1.6 Preparation for Storage ..... 8.1-23
8.1.7 Placement of HI-STORM into Storage ..... 8.1-25

8.2 ISFSI OPERATIONS ..... 8.2-1

8.3 PROCEDURE FOR UNLOADING THE HI-STORM 100 SYSTEM IN THE SPENT FUEL POOL ..... 8.3-1
8.3.1 Overview of HI-STORM 100 System Unloading Operations ..... 8.3-1
8.3.2 HI-STORM Recovery From Storage ..... 8.3-2
8.3.3 Preparation for Unloading ..... 8.3-5
8.3.4 MPC Unloading ..... 8.3-10
8.3.5 Post-Unloading Operations ..... 8.3-10

8.4 MPC TRANSFER TO HI-STAR 100 OVERPACK FOR TRANSPORT OR STORAGE ..... 8.4-1
8.4.1 Overview of Operations ..... 8.4-1
8.4.2 Recovery from Storage ..... 8.4-1
8.4.3 MPC Transfer into the HI-STAR 100 Overpack ..... 8.4-1

## TABLE OF CONTENTS (continued)


8.5 MPC TRANSFER TO HI-STORM DIRECTLY FROM TRANSPORT ..... 8.5-1
8.5.1 Overview of Operations ..... 8.5-1
8.5.2 HI-STAR Receipt and Preparation for MPC Transfer ..... 8.5-1
8.5.3 Perform MPC Transfer into HI-STORM 100 ..... 8.5-3

8.6 REFERENCES ..... 8.6-1

**CHAPTER 9: ACCEPTANCE CRITERIA AND MAINTENANCE PROGRAM** ..... 9.0-1

9.0 INTRODUCTION ..... 9.0-1

9.1 ACCEPTANCE CRITERIA ..... 9.1-1
9.1.1 Fabrication and Nondestructive Examination (NDE) ..... 9.1-1
9.1.1.1 MPC Lid-to-Shell Weld Volumetric Inspection ..... 9.1-4
9.1.2 Structural and Pressure Tests ..... 9.1-5
9.1.2.1 Lifting Trunnions ..... 9.1-5
9.1.2.2 Hydrostatic Testing ..... 9.1-6
9.1.2.2.1 HI-TRAC Transfer Cask Water Jacket ..... 9.1-6
9.1.2.2.2 MPC Confinement Boundary ..... 9.1-7
9.1.2.3 Materials Testing ..... 9.1-7
9.1.3 Leakage Testing ..... 9.1-8
9.1.4 Component Tests ..... 9.1-8
9.1.4.1 Valves, Rupture Discs, and Fluid Transport Devices ..... 9.1-8
9.1.4.2 Seals and Gaskets ..... 9.1-9
9.1.5 Shielding Integrity ..... 9.1-9
9.1.5.1 Fabrication Testing and Control ..... 9.1-9
9.1.5.2 Shielding Effectiveness Test ..... 9.1-11
9.1.5.3 Neutron Absorber Tests ..... 9.1-11
9.1.6 Thermal Acceptance Tests ..... 9.1-12
9.1.7 Cask Identification ..... 9.1-12

9.2 MAINTENANCE PROGRAM ..... 9.2-1
9.2.1 Structural and Pressure Parts ..... 9.2-1
9.2.2 Leakage Tests ..... 9.2-2
9.2.3 Subsystem Maintenance ..... 9.2-2
9.2.4 Pressure Relief Valve ..... 9.2-2
9.2.5 Shielding ..... 9.2-2
9.2.6 Thermal ..... 9.2-3

9.3 REGULATORY COMPLIANCE ..... 9.3-1

9.4 REFERENCES ..... 9.4-1

**CHAPTER 10: RADIATION PROTECTION** ..... 10.1-1

10.1 ENSURING THAT OCCUPATIONAL RADIATION EXPOSURES ARE AS-LOW-AS-REASONABLY-ACHIEVABLE (ALARA) ..... 10.1-1
10.1.1 Policy Considerations ..... 10.1-1
10.1.2 Design Considerations ..... 10.1-2
10.1.3 Operational Considerations ..... 10.1-5

10.1.4 Auxiliary/Temporary Shielding ..... 10.1-6

10.2 RADIATION PROTECTION DESIGN FEATURES ..... 10.2-1

10.3 ESTIMATED ON-SITE COLLECTIVE DOSE ASSESSMENT ..... 10.3-1
10.3.1 Estimated Exposures for Loading and Unloading Operations ..... 10.3-2
10.3.2 Estimated Exposures for Surveillance and Maintenance ..... 10.3-3

10.4 ESTIMATED COLLECTIVE DOSE ASSESSMENT ..... 10.4-1
10.4.1 Controlled Area Boundary Dose for Normal Operations ..... 10.4-1
10.4.2 Controlled Area Boundary Dose for Off-Normal Conditions ..... 10.4-2
10.4.3 Controlled Area Boundary Dose for Accident Conditions ..... 10.4.3

10.5 REFERENCES ..... 10.5-1

**CHAPTER 11: ACCIDENT ANALYSIS** ..... 11.1-1

11.1 OFF-NORMAL CONDITIONS ..... 11.1-1
11.1.1 Off-Normal Pressures ..... 11.1-2
11.1.1.1 Postulated Cause of Off-Normal Pressure ..... 11.1-2
11.1.1.2 Detection of Off-Normal Pressure ..... 11.1-2
11.1.1.3 Analysis of Effects and Consequences of Off-Normal Pressure ..... 11.1-2
11.1.1.4 Corrective Action for Off-Normal Pressure ..... 11.1-4
11.1.1.5 Radiological Impact of Off-Normal Pressure ..... 11.1-4
11.1.2 Off-Normal Environmental Temperatures ..... 11.1-4
11.1.2.1 Postulated Cause of Off-Normal Environmental Temperatures ..... 11.1-4
11.1.2.2 Detection of Off-Normal Environmental Temperatures ..... 11.1-4
11.1.2.3 Analysis of Effects and Consequences of Off-Normal Environmental Temperatures ..... 11.1-5
11.1.2.4 Corrective Action for Off-Normal Environmental Temperatures ..... 11.1-6
11.1.2.5 Radiological Impact of Off-Normal Environmental Temperatures ..... 11.1-7
11.1.3 Leakage of One Seal ..... 11.1-7
11.1.3.1 Postulated Cause of Leakage of One Seal in the Confinement Boundary ..... 11.1-7
11.1.3.2 Detection of Leakage of One Seal in the Confinement Boundary ..... 11.1-8
11.1.3.3 Analysis of Effects and Consequences of Leakage of One Seal in the Confinement Boundary ..... 11.1-8
11.1.3.4 Corrective Action for Leakage of One Seal in the Confinement Boundary ..... 11.1-9
11.1.3.5 Radiological Impact of Leakage of One Seal in the Confinement Boundary ..... 11.1-9
11.1.4 Partial Blockage of Air Inlets ..... 11.1-9
11.1.4.1 Postulated Cause of Partial Blockage of Air Inlets ..... 11.1-9
11.1.4.2 Detection of Partial Blockage of Air Inlets ..... 11.1-10
11.1.4.3 Analysis of Effects and Consequences of Partial

Blockage of Air Inlets ..... 11.1-10
11.1.4.4 Corrective Action for Partial Blockage of Air Inlets ..... 11.1-12
11.1.4.5 Radiological Impact of Partial Blockage of Air Inlets ..... 11.1-12
11.1.5 Off-Normal Handling of HI-TRAC ..... 11.1-12
11.1.5.1 Postulated Cause of Off-Normal Handling of HI-TRAC ..... 11.1-13
11.1.5.2 Detection of Off-Normal Handling of HI-TRAC ..... 11.1-13
11.1.5.3 Analysis of Effects and Consequences of Off-Normal Handling of HI-TRAC ..... 11.1-13
11.1.5.4 Corrective Action for Off-Normal Handling of HI-TRAC ..... 11.1-14
11.1.5.5 Radiological Consequences of Off-Normal Handling of HI-TRAC ..... 11.1-14
11.1.6 Off-Normal Load Combinations ..... 11.1-14

11.2 ACCIDENTS ..... 11.2-1
11.2.1 HI-TRAC Transfer Cask Handling Accident ..... 11.2-1
11.2.1.1 Cause of HI-TRAC Transfer Cask Handling Accident ..... 11.2-1
11.2.1.2 HI-TRAC Transfer Cask Handling Accident Analysis ..... 11.2-1
11.2.1.3 HI-TRAC Transfer Cask Handling Accident Dose Calculations ..... 11.2-3
11.2.1.4 HI-TRAC Transfer Cask Handling Accident Corrective Action ..... 11.2-4
11.2.2 HI-STORM Overpack Handling Accident ..... 11.2-4
11.2.2.1 Cause of HI-STORM Overpack Handling Accident ..... 11.2-4
11.2.2.2 HI-STORM Overpack Handling Accident Analysis ..... 11.2-5
11.2.2.3 HI-STORM Overpack Handling Accident Dose Calculations ..... 11.2-6
11.2.2.4 HI-STORM Overpack Handling Accident Corrective Action ..... 11.2-6
11.2.3 Tip-Over ..... 11.2-6
11.2.3.1 Cause of Tip-Over ..... 11.2-6
11.2.3.2 Tip-Over Analysis ..... 11.2-7
11.2.3.3 Tip-Over Dose Calculations ..... 11.2-8
11.2.3.4 Tip-Over Accident Corrective Action ..... 11.2-8
11.2.4 Fire Accident ..... 11.2-8
11.2.4.1 Cause of Fire ..... 11.2-8
11.2.4.2 Fire Analysis ..... 11.2-9
11.2.4.2.1 Fire Analysis for HI-STORM Overpack ..... 11.2-9
11.2.4.2.2 Fire Analysis for HI-TRAC Transfer Cask ..... 11.2-15
11.2.4.3 Fire Dose Calculations ..... 11.2-16
11.2.4.4 Fire Accident Corrective Actions ..... 11.2-17
11.2.5 Partial Blockage of MPC Basket Vent Holes ..... 11.2-17
11.2.5.1 Cause of Partial Blockage of MPC Basket Vent Holes ..... 11.2-18
11.2.5.2 Partial Blockage of MPC Basket Vent Hole Analysis ..... 11.2-18
11.2.5.3 Partial Blockage of MPC Basket Vent Holes Dose Calculations ..... 11.2-19
11.2.5.4 Partial Blockage of MPC Basket Vent Holes Corrective Action ..... 11.2-19
11.2.6 Tornado ..... 11.2-20
11.2.6.1 Cause of Tornado ..... 11.2-20
11.2.6.2 Tornado Analysis ..... 11.2-20
11.2.6.3 Tornado Dose Calculations ..... 11.2-21
11.2.6.4 Tornado Accident Corrective Action ..... 11.2-22

11.2.7 Flood ..... 11.2-22
11.2.7.1 Cause of Flood ..... 11.2-22
11.2.7.2 Flood Analysis ..... 11.2-22
11.2.7.3 Flood Dose Calculations ..... 11.2-23
11.2.7.4 Flood Accident Corrective Action ..... 11.2-23
11.2.8 Earthquake ..... 11.2-24
11.2.8.1 Cause of Earthquake ..... 11.2-24
11.2.8.2 Earthquake Analysis ..... 11.2-24
11.2.8.3 Earthquake Dose Calculations ..... 11.2-25
11.2.8.4 Earthquake Accident Corrective Action ..... 11.2-25
11.2.9 100% Fuel Rod Rupture ..... 11.2-25
11.2.9.1 Cause of 100% Fuel Rod Rupture ..... 11.2-25
11.2.9.2 100% Fuel Rod Rupture Analysis ..... 11.2-25
11.2.9.3 100% Fuel Rod Rupture Dose Calculations ..... 11.2-26
11.2.9.4 100% Fuel Rod Rupture Accident Corrective Action ..... 11.2-27
11.2.10 Confinement Boundary Leakage ..... 11.2-27
11.2.10.1 Cause of Confinement Boundary Leakage ..... 11.2-27
11.2.10.2 Confinement Boundary Leakage Analysis ..... 11.2-27
11.2.10.3 Confinement Boundary Leakage Dose Calculations ..... 11.2-28
11.2.10.4 Confinement Boundary Leakage Accident Corrective Action 11.2-29
11.2.11 Explosion ..... 11.2-29
11.2.11.1 Cause of Explosion ..... 11.2-29
11.2.11.2 Explosion Analysis ..... 11.2-29
11.2.11.3 Explosion Dose Calculations ..... 11.2-30
11.2.11.4 Explosion Accident Corrective Action ..... 11.2-30
11.2.12 Lightning ..... 11.2-30
11.2.12.1 Cause of Lightning ..... 11.2-30
11.2.12.2 Lightning Analysis ..... 11.2-31
11.2.12.3 Lightning Dose Calculations ..... 11.2-32
11.2.12.4 Lightning Accident Corrective Action ..... 11.2-32
11.2.13 100% Blockage of Air Inlets ..... 11.2-32
11.2.13.1 Cause of 100% Blockage of Air Inlets ..... 11.2-32
11.2.13.2 100% Blockage of Air Inlets Analysis ..... 11.2-32
11.2.13.3 100% Blockage of Air Inlets Dose Calculations ..... 11.2-36
11.2.13.4 100% Blockage of Air Inlets Accident Corrective Action ..... 11.2-36
11.2.14 Burial Under Debris ..... 11.2-36
11.2.14.1 Cause of Burial Under Debris ..... 11.2-36
11.2.14.2 Burial Under Debris Analysis ..... 11.2-37
11.2.14.3 Burial Under Debris Dose Calculations ..... 11.2-39
11.2.14.4 Burial Under Debris Accident Corrective Action ..... 11.2-39
11.2.15 Extreme Environmental Temperature ..... 11.2-39
11.2.15.1 Cause of Extreme Environmental Temperature ..... 11.2-39
11.2.15.2 Extreme Environmental Temperature Analysis ..... 11.2-40
11.2.15.3 Extreme Environmental Temperature Dose Calculations ..... 11.2-41
11.2.15.4 Extreme Environmental Temperature Corrective Action ..... 11.2-41

11.3 REFERENCES ..... 11.3-1

**CHAPTER 12: OPERATING CONTROLS AND LIMITS** ..... 12.0-1

12.0 INTRODUCTION ..... 12.0-1

12.1 PROPOSED OPERATING CONTROLS AND LIMITS ..... 12.1-1
12.1.1 NUREG-1536 (Standard Review Plan) Acceptance Criteria ..... 12.1-1

12.2 DEVELOPMENT OF OPERATING CONTROLS AND LIMITS ..... 12.2-1
12.2.1 Training Modules ..... 12.2-1
12.2.2 Dry Run Training ..... 12.2-2
12.2.3 Functional and Operating Limits, Monitoring Instruments, and Limiting Control Settings ..... 12.2-3
12.2.4 Limiting Conditions for Operation ..... 12.2-3
12.2.5 Equipment ..... 12.2-3
12.2.6 Surveillance Requirements ..... 12.2-4
12.2.7 Design Features ..... 12.2-4
12.2.8 MPC ..... 12.2-4
12.2.9 HI-STORM 100 Overpack ..... 12.2-4

12.3 TECHNICAL SPECIFICATIONS ..... 12.3-1

12.4 REGULATORY EVALUATION ..... 12.4-1

12.5 REFERENCES ..... 12.5-1

APPENDIX 12.A TECHNICAL SPECIFICATION BASES FOR THE HOLTEC HI-STORM 100 SPENT FUEL STORAGE CASK SYSTEM

APPENDIX 12.B COMMENT RESOLUTION LETTERS

**CHAPTER 13: QUALITY ASSURANCE** ..... 13.0-1

13.0 INTRODUCTION ..... 13.0-1

13.1 GRADED APPROACH TO QUALITY ASSURANCE ..... 13.1-1

13.2 PROJECT ORGANIZATION ..... 13.2-1

13.3 QUALITY ASSURANCE PROGRAM ..... 13.3-1
13.3.1 Overview ..... 13.3-1
13.3.2 Quality Assurance Program Documents ..... 13.3-1
13.3.1 Quality Assurance Program Content ..... 13.3-1

13.4 PROJECT PLAN ..... 13.4-1

13.5 REGULATORY COMPLIANCE ..... 13.0-1

13.6 REFERENCES ..... 13.6-1

APPENDIX 13.A DESIGN VERIFICATION CHECKLIST
APPENDIX 13.B HOLTEC QA PROCEDURES

## LIST OF FIGURES (continued)


| | |
|---|---|
| 1.1.1 | HI-STORM 100 Overpack with MPC Partially Inserted |
| 1.1.1A | HI-STORM 100S Overpack with MPC Partially Inserted |
| 1.1.2 | Cross Section Elevation View of MPC |
| 1.1.3 | HI-STORM 100 Overpack Cross Sectional Elevation View |
| 1.1.3A | HI-STORM 100 Overpack Cross Sectional Elevation View |
| 1.1.4 | A Pictorial View of the HI-STORM 100A Overpack |
| 1.1.5 | Anchoring Detail for the HI-STORM 100A Overpack |
| 1.2.1 | Cross Section View of the HI-STORM 100 System |
| 1.2.1A | Cross Section View of the HI-STORM 100S System |
| 1.2.2 | MPC-68 Cross Section View |
| 1.2.3 | MPC-32 Cross-Section |
| 1.2.4 | MPC-24 Cross Section View |
| 1.2.4A | MPC-24E/24EF Cross Section View |
| 1.2.5 | Cross Section Elevation View of MPC |
| 1.2.6 | MPC Confinement Boundary |
| 1.2.7 | Cross Section of HI-STORM Overpack |
| 1.2.8 | HI-STORM 100 Overpack Cross Sectional Elevation View |
| 1.2.8A | HI-STORM 100S Overpack Cross Sectional Elevation View |
| 1.2.9 | 125-Ton HI-TRAC Transfer Cask with Pool Lid Cross Sectional Elevation View |
| 1.2.10 | 125-Ton HI-TRAC Transfer Cask with Transfer Lid Cross Sectional Elevation View |
| 1.2.11 | 100-Ton HI-TRAC Transfer Cask with Pool Lid Cross Sectional Elevation View |
| 1.2.12 | 100-Ton HI-TRAC Transfer Cask with Transfer Lid Cross Sectional Elevation View |
| 1.2.13 | DELETED |
| 1.2.14 | DELETED |

| | |
|---|---|
| 1.2.15 | DELETED |
| 1.2.16a | Major HI-STORM 100 Loading Operations (Sheet 1 of 6) |
| 1.2.16b | Major HI-STORM 100 Loading Operations (Sheet 2 of 6) |
| 1.2.16c | Major HI-STORM 100 Loading Operations (Sheet 3 of 6) |
| 1.2.16d | Major HI-STORM 100 Loading Operations (Sheet 4 of 6) |
| 1.2.16e | Example of HI-STORM 100 Handling Options (Sheet 5 of 6) |
| 1.2.16f | Example of HI-STORM 100 Handling Options (Sheet 6 of 6) |
| 1.2.17a | Major HI-STORM 100 Unloading Operations (Sheet 1 of 4) |
| 1.2.17b | Major HI-STORM 100 Unloading Operations (Sheet 2 of 4) |
| 1.2.17c | Major HI-STORM 100 Unloading Operations (Sheet 3 of 4) |
| 1.2.17d | Major HI-STORM 100 Unloading Operations (Sheet 4 of 4) |
| 1.4.1 | Cask Layout Pitch Requirements Based on 2 by N Array(s) |
| 1.4.2 | Cask Layout Pitch Requirements Based on a Square Array |
| 1.A.1 | Design Stress Intensity vs. Temperature |
| 1.A.2 | Tensile Strength vs. Temperature |
| 1.A.3 | Yield Stress vs. Temperature |
| 1.A.4 | Coefficient of Thermal Expansion vs. Temperature |
| 1.A.5 | Thermal Conductivity vs. Temperature |
| 2.1.1 | Damaged Fuel Container for Dresden Unit-1/Humboldt Bay SNF |
| 2.1.2 | TN Damaged Fuel Canister for Dresden Unit 1 |
| 2.1.2A | TN Thoria Rod Canister for Dresden Unit 1 |
| 2.1.2B | Holtec Damaged Fuel Container for PWR SNF in MPC-24E/24EF |
| 2.1.2C | Holtec Damaged Fuel Container for BWR SNF in MPC-68/68FF |
| 2.1.3 | PWR Axial Burnup Profile with Normalized Distribution |

| | |
|---|---|
| 2.1.4 | BWR Axial Burnup Profile with Normalized Distribution |
| 2.1.5 | MPC With Upper and Lower Fuel Spacers |
| 2.1.6 | DELETED |
| 2.1.7 | DELETED |
| 2.1.8 | DELETED |
| 2.3.1 | HI-STAR Upending and Downending on a Rail Car |
| 2.3.2 | HI-TRAC Upending and Downending on a Heavy-Haul Transport Trailer |
| 2.3.3 | HI-TRAC Placement on HI-STORM 100 for MPC Transfer Operations |
| 2.3.4 | HI-TRAC Placement on HI-STAR 100 for MPC Transfer Operations |
| 2.A.1 | Typical HI-STORM/ISFSI Pad Fastening Detail |
| 3.1.1 | MPC-68 and MPC-32 Fuel Basket Geometry |
| 3.1.2 | 0° Drop Orientations for the MPCs |
| 3.1.3 | 45° Drop Orientations for the MPCs |
| 3.4.1 | Finite Element Model of MPC-24 (0 Degree Drop Model) |
| 3.4.2 | Finite Element Model of MPC-32 (0 Degree Drop Model) |
| 3.4.3 | Finite Element Model of MPC-68 (0 Degree Drop Model) |
| 3.4.4 | Finite Element Model of MPC-24 (45 Degree Drop Model) |
| 3.4.5 | Finite Element Model of MPC-32 (45 Degree Drop Model) |
| 3.4.6 | Finite Element Model of MPC-68 (45 Degree Drop Model) |
| 3.4.7 | Detail of Fuel Assembly Pressure Load on MPC Basket |
| 3.4.8 | 0 Degree Side Drop of MPC |
| 3.4.9 | 45 Degree Side Drop of MPC |
| 3.4.10 | Comparison of 125 Ton and 100 Ton HI-TRAC Lifting Trunnion Connection |
| 3.4.11 | Confinement Boundary Model Showing Temperature Data Points |

## LIST OF FIGURES (continued)


| | |
|---|---|
| 3.4.12 | MPC-Confinement Boundary Finite Element Grid (Exploded View) |
| 3.4.13 | Von Mises Stress - Outer Shell |
| 3.4.14 | Plastic Strain Outer Shell |
| 3.4.15 | Von Mises Stress - Inner Shell |
| 3.4.16 | Plastic Strain - Inner Shell |
| 3.4.16a | Von Mises Stress - Channel |
| 3.4.16b | Plastic Strain - Channel |
| 3.4.17 | Top and Bottom Lifting of the Loaded HI-STORM 100 |
| 3.4.18 | HI-TRAC Upending in the Upending Frame |
| 3.4.19 | HI-STORM 100 Tip-Over Event |
| 3.4.20 | HI-STORM 100 End Drop Event |
| 3.4.21 | HI-TRAC Lifting with the Pool and Transfer Lids |
| 3.4.22 | HI-TRAC Side Drop Event |
| 3.4.23 | Forces and Moments on 125 Ton Rotation Trunnion Weld |
| 3.4.24 | Working Model Solution for Impact Force on HI-TRAC 100 Transfer Cask Outer Shell |
| 3.4.25 | HI-STORM 100 Overturning Scenario - Initial Angular Velocity = 0.628 Radians/Second Assumed Caused By a Pressure Pulse |
| 3.4.26 | HI-STORM 100 Overturning Scenario - Initial Angular Velocity = 0.628 Radians/Second Maximum Angular Excursion |
| 3.4.27 | HI-TRAC Transfer Cask in Short-Side Impact (Cask Rests at a Position of -5° from Horizontal) |
| 3.4.28 | HI-TRAC Transfer Cask in Long-Side Impact (Cask Rests at a Position of -1° from Horizontal) |
| 3.4.29 | Free-Body of Transfer Lid During Primary Impact with Target |
| 3.4.30 | Seismic Spectra Sets Used for Time History Analysis of HI-STORM 100 on ISFSI Pad |
| 3.4.31 | RG 1.60 "H1" |

3.4.32 RG 1.60 "H2"

3.4.33 RG 1.60 "VT"

3.4.34 Horizontal Acceleration Time History "FN"

3.4.35 Horizontal Acceleration Time History "FP"

3.4.36 Horizontal Acceleration Time History "FV"

3.4.37 Geometry for Quasi-Static Analysis

3.4.38 Free Body for Quasi-Static Analysis

3.4.39 Sector Lug Finite Element Mesh

3.4.40 Sector Lug Stress - Case 1 Preload

3.4.41 Sector Lug Stress Intensity - Case 2 Preload + Seismic

3.4.42 Exploded View Showing Ground Plane, Overpack, MPC, and Overpack Top Lid

3.4.43 View of Assembled HI-STORM on Pad-MPC Inside and Top Lid Attached

3.4.44 Variation of Foundation Resistance Force vs. Time for Reg. Guide 1.60 Seismic Input

3.4.45 Variation of Representative Stud Tensile Force vs. Time for Reg. Guide 1.60 Seismic Input

3.4.46 MPC/HI-STORM 100A Impulse vs. Time - Reg. Guide 1.60 Event

3.4.47 Instantaneous Calculated Coefficient of Friction - Reg. Guide 1.60 Event

3.5.1 Fuel Rod Deformation Phases, $g_1 > 0$

3.5.2 Fuel Rod Deformation Phases, $g_1 = 0$

3.5.3 Fuel Rod Deformation Phases, $g_1 = 0$, $F_2 > F_1$

3.5.4 Fuel Rod Deformation Phases, Inter-grid Strap Deformation $F_3 > F_2$

3.5.5 Fuel Rod Deformation Phases, Point Contact at Load $F_4$ Maximum Bending Moment at A

3.5.6 Fuel Rod Deformation Phases, Extended Region of Contact $F_5 > F_4$, Zero Bending Moment at A'

3.5.7 Free Body Diagram When Moment at A' = 0

3.5.8 View C - C

| | |
|---|---|
| 3.5.9 | Exaggerated Detail Showing Multiple Fuel Rods Subject to Lateral Deflection with Final Stacking of Rod Column |
| 3.A.1 | Tipover Finite Element Model (3-D View) |
| 3.A.2 | Tipover Finite-Element Model (Plan) |
| 3.A.3 | Tipover Finite-Element Model (XZ View) |
| 3.A.4 | Tipover Finite-Element Model (YZ View) |
| 3.A.5 | End-Drop Finite-Element Model (3-D View) |
| 3.A.6 | End-Drop Finite-Element Model (Plan) |
| 3.A.7 | End-Drop Finite-Element Model (XZ View) |
| 3.A.8 | End-Drop Finite-Element Model (YZ View) |
| 3.A.9 | Soil Finite-Element Model (3-D View) |
| 3.A.10 | Concrete Pad Finite-Element Model (3-D View) |
| 3.A.11 | Overpack Steel Structure Finite-Element Model (3-D View) |
| 3.A.12 | Inner Shell and Channels Finite-Element Model (3-D View) |
| 3.A.13 | Lid Steel Finite-Element Model (3-D View) |
| 3.A.14 | Overpack Concrete Components Finite-Element Model (3-D View) |
| 3.A.15 | MPC Finite Element Model (3-D View) |
| 3.A.16 | Pivot Point During Tip-Over Condition |
| 3.A.17 | Tip-Over Event Overpack Slams Against the Foundation Developing a Resistive Force |
| 3.A.18 | Measurement Points and Corresponding Finite-Element Model Nodes |
| 3.A.19 | Tipover Scenario: Impact Force Time-Histories |
| 3.A.20 | Deleted |
| 3.A.21 | Deleted |
| 3.A.22 | Deleted |

| | |
|---|---|
| 3.A.23 | Deleted |
| 3.A.24 | Deleted |
| 3.A.25 | Deleted |
| 3.A.26 | Deleted |
| 3.A.27 | Deleted |
| 3.A.28 | Deleted |
| 3.A.29 | Deleted |
| 3.A.30 | Deleted |
| 3.C.1 | Free Body Diagram of Cask for Large Missile Strike/Tornado Event |
| 3.C.2 | Centroid Motion - Impact/Wind |
| 3.C.3 | Centroid Motion - Impact/Dip |
| 3.D.1 | Bottom End Lift at the Inlet Vents |
| 3.D.2a | Top End Lift Finite Element Model |
| 3.D.2b | Top End Lift Finite Element Model |
| 3.D.2c | Top End Lift Finite Element Model |
| 3.D.3 | Bottom End Lift at the Inlet Vents - Stress Intensity Profile (psi) |
| 3.D.4a | Top End Lift at the Lifting Lugs - Stress Intensity (psi) |
| 3.D.4b | Top End Lift at the Lifting Lugs - Stress Intensity (psi) |
| 3.D.4c | Top End Lift at the Lifting Lugs - Stress Intensity (psi) |
| 3.D.5a | Top End Lift - Baseplate Stress Intensity (psi) |
| 3.D.5b | Top End Lift - Baseplate Stress Intensity (psi) |
| 3.D.5c | Top End Lift - Baseplate Stress Intensity (psi) |
| 3.E.1 | Sketch of Lifting Trunnion Geometry Showing Applied Load |
| 3.E.2 | Free Body Sketch of Lifting Trunnion Threaded Region Showing Moment Balance by Shear Stresses |

| | |
|---|---|
| 3.E.3 | Weld Configuration in Lifting Trunnion Block |
| 3.F.1 | Lead Slump Finite Element Model |
| 3.F.2 | Lead Slump Analysis (Phase I) Lead Contraction |
| 3.F.3 | Lead Slump Analysis (Phase II) |
| 3.F.4 | Lead Slump Analysis (Phase II) Stress Intensity |
| 3.G.1 | Small Missile Impact |
| 3.G.2 | Post Impact Deformation of HI-STORM 100 Outer Shell Backed by Concrete and Impacted by a Horizontal Missile Strike |
| 3.G.3 | Missile Impact on Top Lid |
| 3.G.4 | Missile Strike at Top of HI-STORM |
| 3.G.5 | Top Lid Missile Impact |
| 3.H.1 | HI-TRAC Missile Strike Locations |
| 3.I.1 | Geometry of Section for Thermal Expansion Calculations |
| 3.M.1 | Geometry of Lid Shield |
| 3.U.1 | Geometry of Section for Thermal Expansion Calculations |
| 3.W.1 | Geometry of Section for Thermal Expansion Calculations |
| 3.X.1 | Triangular Deceleration Pulse Shape |
| 3.X.2 | Dynamic Load Factor for Single Degree of Freedom System - Triangular Pulse Shape, No Damping |
| 3.X.3 | Dynamic Model for Multi-Degree of Freedom Analysis for DLF Determination |
| 3.X.4 | Dynamic Force in Lower Panel Spring - PWR |
| 3.X.5 | Dynamic Force in Lower Panel Spring - BWR |
| 3.Y.1 | Freebody of Stress Distribution in the Weld and the Honeycomb Panel |
| 3.Y.2 | Freebody of Idealized Fuel Basket Support |
| 3.Z.1 | HI-TRAC 125 Results |

| | |
|---|---|
| 3.Z.2 | HI-TRAC 100 Results |
| 3.Z.3 | HI-TRAC 125 Mass Properties |
| 3.Z.4 | HI-TRAC 100 Mass Properties |
| 3.Z.5 | HI-TRAC Lower Impact Spring |
| 3.Z.6 | HI-TRAC Upper Spring |
| 3.AA.1 | Forces and Moments on 125 Ton Rotation Trunnion Weld |
| 3.AA.2 | 125-Ton HI-TRAC - Pocket Trunnion Model |
| 3.AA.3 | 125-Ton HI-TRAC - Pocket Trunnion Model (Outer Shell) |
| 3.AA.4 | 125-Ton HI-TRAC - Pocket Trunnion Model (Outer Shell) |
| 3.AA.5 | 125-Ton HI-TRAC - Pocket Trunnion Model (Inner Shell) |
| 3.AA.6 | 125-Ton HI-TRAC - Pocket Trunnion Model (Inner Shell) |
| 3.AA.7 | 125-Ton HI-TRAC - Pocket Trunnion Model (Radial Channels) |
| 3.AA.8 | 125-Ton HI-TRAC - Pocket Trunnion Model (Radial Channels) |
| 3.AD.1 | Door Plate Simply Supported Beam Model |
| 3.AD.2 | Minimum Section of Bottom Plate for Stress Analysis |
| 3.AD.3 | Housing Bolt Array to Support Lift Operation |
| 3.AE.1a | Finite Element Plot |
| 3.AE.1b | Finite Element Plot |
| 3.AE.1c | Finite Element Plot |
| 3.AE.2 | Stress Intensity Plot (psi) |
| 3.AE.3 | Free-Body of HI-TRAC 125 Bottom Flange Showing Load from Lid Bolts AT@ and Equilibrium Loads AT1" and AT2" in the Inner and Outer Shells |
| 3.AE.4 | 125 Ton Top End Trunnion Block Showing Four Added Stiffeners |
| 3.AI.1 | 100-Ton HI-TRAC - Pocket Trunnion Model (Outer Shell) |

3.AI.2 100-Ton HI-TRAC - Pocket Trunnion Model (Outer Shell)

3.AI.3 100-Ton HI-TRAC - Pocket Trunnion Model (Inner Shell)

3.AI.4 100-Ton HI-TRAC - Pocket Trunnion Model (Inner Shell)

3.AI.5 100-Ton HI-TRAC - Pocket Trunnion Model (Radial Channels)

3.AI.6 100-Ton HI-TRAC - Pocket Trunnion Model (Radial Channels)

3.AJ.1 Door Plate Simply Supported Beam Model

3.AJ.2 Section of Bottom Plate for Stress Analysis

3.AJ.3 Housing Bolt Array to Support Lift Operation

3.AN.1 HI-TRAC Transfer Cask in Short-Side Impact (Cask Rests at a Position of -5° from Horizontal)

3.AN.2 HI-TRAC Transfer Cask in Long-Side Impact (Cask Rests at a Position of -1° from Horizontal)

3.AN.3 125-Ton HI-TRAC, Scenario A

3.AN.4 HI-TRAC 125 Finite Element Mesh

3.AN.5 Vertical Displacement at Transfer Lid, Top Lid Outer Points, Scenario A

3.AN.6 Vertical Deceleration at Transfer Lid, Scenario A

3.AN.7 Vertical Deceleration at Inner Shell Centroid, Scenario A

3.AN.8 Vertical Deceleration of Top Lid, Scenario A

3.AN.9 Interface Forces at Target/Primary and Secondary Impact Sites

3.AN.10 Absolute Vertical Displacement at Centroid Location (Top and Bottom of Inner Shell)

3.AN.11 Overall Model of 125-Ton Drop, Scenario B

3.AN.12 Absolute Vertical Displacement at Transfer Lid and Top Lid

3.AN.13 Rigid Body Deceleration - Transfer Lid, Centroid, Top Lid, Scenario B

3.AN.14 Interface Force on Target, Scenario B

3.AN.15 Vertical Displacements at Top and Bottom of Inner Shell, Scenario B

## LIST OF FIGURES (continued)


3.AN.16 Force at MPC-Top Lid Interface, Scenario B

3.AN.17 Rigid Body Decelerations - Transfer Lid, Centroid, Top Lid, Scenario A

3.AN.18 Interface Force at Target (Lower Trunnion, Water Jacket, Upper Trunnion)

3.AN.19 Upper and Lower Vertical Displacements at Centroid

3.AN.20 Vertical Displacement at Transfer Lid and Top Lid, Scenario B

3.AN.21 Rigid Body Decelerations, Scenario B

3.AN.22 Force at Target Impact Sites, Scenario B

3.AN.23 Inner Shell Vertical Displacements - Upper and Lower Points at Centroid

3.AN.24 Interface Force - MPC/Top Lid Impact Site, Scenario B

3.AN.25 Geometry of Inner Shell Deformation

3.AN.26 Large Tornado Missile Impact - Total Force Applied to Transfer Cask

3.AN.27 Von Mises Stress in Water Jacket - Large Tornado Missile Impact on 125-Ton HI-TRAC

3.AN.28 Von Mises Stress in Water Jacket - Large Tornado Missile Impact on 100-Ton HI-TRAC

3.AN.29 Slap Down of HI-TRAC 100, Scenario B

3.AN.30 Local View at Secondary Impact Location

4.2.1 Thermal Conductivity of Helium and Air vs. Temperature

4.2.2 Viscosity of Helium and Air vs. Temperature

4.3.1 Comparison of Calculated (By EPRI and PNL) and Theoretical Maximum Fuel Rod Pressures for PWR Fuel

4.3.2 Comparison of Reg. Guide 3.54 Decay Heat Data With ORIGEN-S for BWR Fuel

4.3.3 Comparison of Reg. Guide 3.54 Decay Heat Data With ORIGEN-S for PWR Fuel

4.3.4 Comparison of Fuel Cladding Temperature Limits with HI-STORM Permissible Temperatures

4.4.1 Homogenization of the Storage Cell Cross-Section

4.4.2 MPC Cross-Section Replaced With an Equivalent Two Zone Axisymmetric Body

| | |
|---|---|
| 4.4.3 | Westinghouse 17x17 OFA PWR Fuel Assembly Model |
| 4.4.4 | General Electric 9x9 BWR Fuel Assembly Model |
| 4.4.5 | Comparison of FLUENT Calculated Fuel Assembly Conductivity Results with Published Technical Data |
| 4.4.6 | Typical MPC Basket Parts in a Cross-Sectional View |
| 4.4.7 | Resistance Network Model of a "Box Wall-Boral-Sheathing" Sandwich |
| 4.4.8 | DELETED |
| 4.4.9 | MPC-24 Basket Cross-Section ANSYS Finite Element Model |
| 4.4.10 | MPC-68 Basket Cross-Section ANSYS Finite Element Model |
| 4.4.11 | Illustration of an MPC Basket to Shell Aluminum Heat Conduction Element |
| 4.4.12 | Stack Air Temperature as a Function of Height |
| 4.4.13 | Schematic Depiction of the HI-STORM Thermal Analysis |
| 4.4.14 | DELETED |
| 4.4.15 | DELETED |
| 4.4.16 | MPC-24 Peak Fuel Rod Axial Temperature Profile for Normal Storage |
| 4.4.17 | MPC-68 Peak Fuel Rod Axial Temperature Profile for Normal Storage |
| 4.4.18 | DELETED |
| 4.4.19 | MPC-24 Radial Temperature Profile |
| 4.4.20 | MPC-68 Radial Temperature Profile |
| 4.4.21 | DELETED |
| 4.4.22 | DELETED |
| 4.4.23 | DELETED |
| 4.4.24 | Illustration of Minimum Available Planar Area Per HI-STORM Module at an ISFSI |
| 4.4.25 | Fuel Basket Regionalized Loading Scenario |
| 4.4.26 | Bounding Overpack Annulus Axial Profiles |

| | |
|---|---|
| 4.5.1 | Water Jacket Resistance Network Analogy for Effective Conductivity Calculation |
| 4.5.2 | Loaded HI-TRAC Temperature Contours Plot |
| 4.5.3 | Deleted |
| 4.A.1 | Creep tests of Lead Wire |
| 4.A.2 | Comparison of Holtec Model Creep to Irradiated Cladding Creep Data |
| 4.A.3 | Comparison of Holtec Model Creep to Kaspar et. Al. Irradiated Cladding Creep Data |
| 4.A.4 | Comparison of Holtec Model Creep to Goll et. Al. Irradiated Cladding Creep Data - Scatter Plot |
| 4.A.5 | Comparison of Holtec Creep Model to Kaspar et. Al. Creep Curve for KWO Irradiated Samples |
| 4.A.6 | PWR Fuel Decay Heat vs. Post Core Decay Time |
| 4.A.7 | BWR Fuel Decay Heat vs. Post Core Decay Time |
| 4.A.8 | Peak Clad Temperature Variation with MPC Heat Load for PWR Canisters |
| 4.A.9 | Rod Gas Temperature Variation with MPC Heat Load (Q) for PWR Canisters |
| 4.A.10 | Peak Clad Temperature Variation with PC Heat Load for BWR Canisters |
| 4.A.11 | Rod Gas Temperature Variation with MPC Heat Load (Q) for BWR Canisters |
| 4.A.12 | Oxide Corrosion Data |
| 4.A.13 | Oxide Corrosion Data |
| 4.B.1 | Cutaway View of a HI-STORM Overpack Standing on an ISFSI Pad |
| 4.B.2 | Depiction of the HI-STORM Ventilated Cask heat Dissipation Elements |
| 4.B.3 | Relative Significance of Heat Dissipation Elements in the HI-STORM 100 |
| 4.B.4 | Air Access Restrictions in the HI-STORM Thermal Model |
| 4.B.5 | In-Plane Radiative Cooling of a HI-STORM Cask in an Array |
| 4.B.6 | In-Plane Radiative Blocking of a HI-STORM Cask by Hypothetical Reflecting Boundary |
| 4.B.7 | Radiative Heating of Reference HI-STORM Cask by Surrounding Casks |

4.B.8 A Classical Thermal Scenario: Air Cooling of a Heated Square Block

5.1.1 Cross Section Elevation View of Overpack with Dose Point Location

5.1.2 Cross Section Elevation View of 125-Ton HI-TRAC Transfer Cask with Dose Point Locations

5.1.3 Annual Dose Versus Distance for Various Configurations of the MPC-24 45,000 MWD/MTU and 5-Year Cooling (8760 Hour Occupancy Assumed)

5.1.4 Cross Section Elevation View of 100-Ton HI-TRAC Transfer Cask (With Pool Lid) With Dose Point Locations

5.1.5 Dose Rate 1-Foot From the Side of the 100-Ton HI-TRAC Transfer Cask with the MPC-24 for 35,000 MWD/MTU and 5-Year Cooling

5.1.6 Dose Rate on the Surface of the Pool Lid on the 100-Ton HI-TRAC Transfer Cask with the MPC-24 for 35,000 MWD/MTU and 5-Year Cooling

5.1.7 Dose Rate 1-Foot From the Bottom of the Transfer Lid on the 100-Ton HI-TRAC Transfer Cask with the MPC-24 for 35,000 MWD/MTU and 5-Year Cooling

5.1.8 Dose Rate 1-Foot From the Top of Top Lid on the 100-Ton HI-TRAC Transfer Cask with the MPC-24 for 35,000 MWD/MTU and 5-Year Cooling

5.1.9 Dose Rate 1-Foot From the Side of the 100-Ton HI-TRAC Transfer Cask With Temporary Shielding Installed, with the MPC-24 for 35,000 MWD/MTU and 5-Year Cooling (Total Dose Without Temporary Shielding Shown for Comparison)

5.1.10 Dose Rate At Various Distances From the Side of the 100-Ton HI-TRAC Transfer Cask with the MPC-24 for 35,000 MWD/MTU and 5-Year Cooling

5.1.11 Dose Rate At Various Distances From the Bottom of Transfer Lid on the 100-Ton HI-TRAC Transfer Cask with the MPC-24 for 35,000 MWD/MTU and 5-Year Cooling

5.1.12 Cross Section Elevation View of the HI-STORM 100S overpack with Dose Point Locations

5.3.1 HI-STORM 100 Overpack with MPC-32 Cross Sectional View as Modeled in MCNP

5.3.2 HI-STORM 100 Overpack with MPC-24 Cross Sectional View as Modeled in MCNP

5.3.3 HI-STORM 100 Overpack with MPC-68 Cross Sectional View as Modeled in MCNP

5.3.4 Cross Sectional View of an MPC-32 Basket Cell as Modeled in MCNP

5.3.5 Cross Sectional View of an MPC-24 Basket Cell as Modeled in MCNP

| | |
|---|---|
| 5.3.6 | Cross Sectional View of an MPC-68 Basket Cell as Modeled in MCNP |
| 5.3.7 | HI-TRAC Overpack with MPC-24 Cross Sectional View as Modelled in MCNP |
| 5.3.8 | Axial Location of PWR Design Basis Fuel in the HI-STORM Overpack |
| 5.3.9 | Axial Location of BWR Design Basis Fuel in the HI-STORM Overpack |
| 5.3.10 | Cross Section of HI-STORM 100 Overpack |
| 5.3.11 | HI-STORM 100 Overpack Cross Sectional Elevation View |
| 5.3.12 | 100-Ton HI-TRAC Transfer Cask with Pool Lid Cross Sectional Elevation View (As Modeled) |
| 5.3.13 | 125-Ton HI-TRAC Transfer Cask with Pool Lid Cross Sectional Elevation View (As Modeled) |
| 5.3.14 | 100-Ton HI-TRAC Transfer Cask with MPC-24 Cross-Sectional View (As Modeled) |
| 5.3.15 | 125-Ton HI-TRAC Transfer Cask with MPC-24 Cross-Sectional View (As Modeled) |
| 5.3.16 | 100-Ton HI-TRAC Transfer Lid (As Modeled) |
| 5.3.17 | 125-Ton HI-TRAC Transfer Lid (As Modeled) |
| 5.3.18 | HI-STORM 100S Overpack Cross Sectional Elevation View |
| 5.3.19 | Gamma Shield Cross Plate Configuration of HI-STORM 100 and HI-STORM 100S |
| 6.2.1 | DELETED |
| 6.3.1 | Typical Cell in the Calculation Model (Planar Cross-Section) with Representative Fuel in the MPC-24 Basket |
| 6.3.1A | Typical Cell in the Calculation Model (Planar Cross-Section) wth Representative Fuel in the MPC-24E basket |
| 6.3.2 | Typical Cell in the Calculation Model (Planar Cross-Section) with Representative Fuel in the MPC-32 Basket |
| 6.3.3 | Typical Cell in the Calculation Model (Planar Cross-Section) with Representative Fuel in the MPC-68 Basket |
| 6.3.4 | Calculation Model (Planar Cross-Section) with Fuel Illustrated in One Quadrant of the MPC-24 |

| | |
|---|---|
| 6.3.4A | Calculation Model (Planar Cross-Section) with Fuel Illustrated in One Quadrant of the MPC-24E |
| 6.3.5 | Calculation Model (Planar Cross-Section) with Fuel Illustrated in One Quadrant of the MPC-32 |
| 6.3.6 | Calculation Model (Planar Cross-Section) with Fuel Illustrated in One Quadrant of the MPC-68 |
| 6.3.7 | Sketch of the Calculational Model in the Axial Direction |
| 6.4.1 | DELETED |
| 6.4.2 | Failed Fuel Calculation Model (Planar Cross-Section) with 6x6 Array with 4 Missing Rods in the MPC-68 Basket |
| 6.4.3 | Failed Fuel Calculation Model (Planar Cross-Section) with 6x6 Array with 8 Missing Rods in the MPC-68 Basket |
| 6.4.4 | Failed Fuel Calculation Model (Planar Cross-Section) with 6x6 Array with 12 Missing Rods in the MPC-68 Basket |
| 6.4.5 | Failed Fuel Calculation Model (Planar Cross-Section) with 6x6 Array with 18 Missing Rods in the MPC-68 Basket |
| 6.4.6 | Failed Fuel Calculation Model (Planar Cross-Section) with 7x7 Array with 8 Missing Rods in the MPC-68 Basket |
| 6.4.7 | Failed Fuel Calculation Model (Planar Cross-Section) with 7x7 Array with 13 Missing Rods in the MPC-68 Basket |
| 6.4.8 | Failed Fuel Calculation Model (Planar Cross-Section) with 7x7 Array with 24 Missing Rods in the MPC-68 Basket |
| 6.4.9 | Failed Fuel Calculation Model (Planar Cross-Section) with Damaged Fuel Collapsed Into 8x8 Array in the MPC-68 Basket |
| 6.4.10 | Calculated K-Effective As A Function of Internal Moderator Density |
| 6.4.11 | Locations of the Damaged Fuel Container in the MPC-68 and MPC-68FF |
| 6.4.12 | Locations of the Damaged Fuel Containers in the MPC-24E |
| 6.4.13 | Maximum keff for the MPC-68 with Generic BWR Damaged Fuel Container, Initial Enrichment of 4.0 wt% for Damaged and 3.7 wt% for Intact Fuel |

## LIST OF FIGURES (continued)


| | |
|---|---|
| 6.4.14 | Maximum keff for the MPC-24E with Generic PWR Damaged Fuel Container, Initial Enrichment of 4.0 wt% for Damaged and Intact Fuel |
| 6.4.15 | Thoria Rod Canister (Planar Cross-Section) with 18 Thoria Rods in the MPC-68 Basket |
| 6.A.1 | MCNP4a Calculated k-eff Values for Various Values of the Spectral Index |
| 6.A.2 | KENO5a Calculated k-eff Values for Various Values of the Spectral Index |
| 6.A.3 | MCNP4a Calculated k-eff Values at Various U-235 Enrichments |
| 6.A.4 | KENO5a Calculated k-eff Values at Various U-235 Enrichments |
| 6.A.5 | Comparison of MCNP4a and KENO5a Calculations for Various Fuel Enrichments |
| 6.A.6 | Comparison of MCNP4a and KENO5a Calculations for Various Boron-10 Areal Densities |
| 7.1.1 | HI-STORM 100 System Confinement Boundary |
| 8.1.1 | Loading Operations Flow Diagram |
| 8.1.2a | Major HI-STORM 100 Loading Operations |
| 8.1.2b | Major HI-STORM 100 Loading Operations |
| 8.1.2c | Major HI-STORM 100 Loading Operations |
| 8.1.2d | Major HI-STORM 100 Loading Operations |
| 8.1.2e | Example of HI-STORM 100 Handling Options |
| 8.1.2.f | Example of HI-TRAC Handling Options (Missile Shields Not Shown for Clarity) |
| 8.1.3 | Lift Yoke Engagement and Vertical HI-TRAC Handling (Shown with the Pool Lid and the Transfer Lid) |
| 8.1.4 | HI-TRAC Upending/Downending in the Transfer Frame |
| 8.1.5 | HI-STORM Vertical Handling |
| 8.1.6 | MPC Upending in the MPC Upending Frame |
| 8.1.7 | MPC Rigging for Vertical Lifts |
| 8.1.8 | MPC Alignment in HI-TRAC |
| 8.1.9 | MPC Lid and HI-TRAC Accessory Rigging |

| | |
|---|---|
| 8.1.10 | Fuel Spacers |
| 8.1.11 | Drain Port Details |
| 8.1.12 | Drain Line Positioning |
| 8.1.13 | Annulus Shield/Annulus Seal |
| 8.1.14 | Annulus Overpressure System |
| 8.1.15 | HI-TRAC Lid Retention System in Exploded View |
| 8.1.16 | MPC Vent and Drain Port RVOA Connector |
| 8.1.17 | Drain Line Installation |
| 8.1.18 | Temporary Shield Ring |
| 8.1.19 | MPC Water Pump-Down for MPC Lid Welding Operations |
| 8.1.20 | MPC Air Displacement and Hydrostatic Testing |
| 8.1.21 | MPC Blowdown |
| 8.1.22a | Vacuum Drying System |
| 8.1.22b | Moisture Removal System |
| 8.1.23 | Helium Backfill System |
| 8.1.24 | MPC Lift Cleats |
| 8.1.25 | MPC Support Stays |
| 8.1.26 | HI-TRAC Bottom Lid Replacement |
| 8.1.27 | HI-STORM Lid Rigging |
| 8.1.28 | Sample MPC Transfer Options |
| 8.1.29a | Sample HI-STORM and HI-TRAC Transfer Options |
| 8.1.29b | Sample HI-STORM and HI-TRAC Transfer Options |
| 8.1.30 | Sample HI-STORM Vent Duct Shield Inserts |
| 8.1.31 | HI-TRAC Alignment Over HI-STORM |

| | |
|---|---|
| 8.1.32 | Examples of an MPC Downloader |
| 8.1.33 | Transfer Lid Trim Plates |
| 8.1.34a | HI-STORM Vent Screens and Gamma Shield Cross Plate Installation (Typ.) |
| 8.1.34b | HI-STORM Thermocouple Installation |
| 8.1.35 | HI-STORM Placement of the ISFSI Pad |
| 8.1.36 | HI-STORM Jacking |
| 8.1.37 | HI-TRAC Lid Bolt Torquing Pattern |
| 8.3.1 | Unloading Operations Flow Diagram |
| 8.3.2a | Major HI-STORM 100 Unloading Operations |
| 8.3.2b | Major HI-STORM 100 Unloading Operations |
| 8.3.2c | Major HI-STORM 100 Unloading Operations |
| 8.3.2d | Major HI-STORM 100 Unloading Operations |
| 8.3.3 | MPC Gas Sampling in Preparation for Unloading |
| 8.3.4 | MPC Cool-Down |
| 8.4.1 | HI-STAR and HI-TRAC Mating |
| 8.5.1 | HI-STAR Annulus Gas Sampling |
| 10.1.1 | HI-STORM 100 System Auxiliary/Temporary Shielding |
| 10.3.1a | Operator Work Locations Used for Estimating Personnel Exposure |
| 10.3.1b | Operator Work Locations Used for Estimating Personnel Exposure |
| 10.3.1c | Operator Work Locations Used for Estimating Personnel Exposure |
| 10.3.1d | Operator Work Locations Used for Estimating Personnel Exposure |
| 10.3.1e | Operator Work Locations Used for Estimating Personnel Exposure |
| 11.2.1 | Fire Transient ANSYS Model Element Plot |
| 11.2.2 | Temperature Profiles Through Overpack Wall At 60, 120, and 217 Seconds |

11.2.3 Temperature Profiles Through Overpack Wall At 217, 600, and 1200 Seconds

11.2.4 Temperature Profiles Through Overpack Wall At 20, 40, and 90 Minutes

11.2.5 Temperature vs. Time At Concrete Mid-Height

11.2.6 Maximum Allowable Burial Under Debris Time Versus Decay Heat Load

11.2.7 Temperature Rise versus Duct Blockage Time

11.2.8 DELETED

## SUMMARY OF SIGNIFICANT CHANGES TO HI-STORM 100S FROM LAR 1014-1, REVISION 1 TO REVISION 2

| ITEM | CHANGE | COMMENTS |
|---|---|---|
| Drawing format | Drawing produced using SolidWorks™ modeling software. | SolidWorks provides and an integrated Bill-of-Materials. Solidworks also provides a heretofore unattainable ability to examine the design from any direction desired by the viewer and identify any potential interferences because the component is a solid model.. |
| Overpack lid and lifting points | 1. The HI-STORM 100S lid has been rotated 45 degrees away from being vertically aligned with the inlet air ducts. As a result, the long radial ribs in the overpack body have been likewise rotated 45 degrees to be re-positioned above the inlet air ducts.<br><br>2. Four additional anchor blocks and part-length radial ribs are added circumferentially between the four main anchor blocks | 1. This change was necessary to properly orient the lift brackets during transport of the loaded overpack with a crawler with the added benefit that the long radial ribs now stiffen the inlet air ducts during bottom jacking.<br><br>2. This change was made to accommodate fit-up of ancillary equipment. |
| Overpack inner steel shield shell and body concrete density | The overpack inner steel shield shell has been removed and the overpack body minimum concrete density has been increased from 146 lb/ft$^3$ to 155 lb/ft$^3$ | This change was made to address the severe stresses applied during attachment and welding of the shield shell to the overpack inner shell to ensure intimate contact between the two. The concrete density increase is made to compensate for the slight reduction in shielding that occurs as a result of the deletion of the shield shell. |
| Overpack shear bar | The original shear bar design has been replaced with an improved design whereby plates in the lid and in the overpack top resist the shear loads of a non-mechanistic tipover event. | This change was made to address several questions in Chapter 3. |
| Overpack pedestal | Concrete pour holes have been added to the pedestal baseplate. | These holes facilitate a more efficient and complete concrete pouring into the pedestal. |
| Overpack radial channels | 1. The channel material is changed from carbon steel to stainless steel.<br><br>2. The direct welded attachment of the channels to the overpack inner shell was replaced by as adjustable arrangement using angles. | 1. Stainless steel channels eliminates the need to install stainless steel shims on the carbon steel channels.<br><br>2. The adjustable design allows greater precision in positioning the channels. |

# LIST OF EFFECTIVE PAGES FOR PROPOSED FSAR REVISION 1

| Page | Revision | | Page | Revision |
|---|---|---|---|---|
| i | 1A | | 1.0-15 | 1B |
| ii | 1A | | 1.0-16 | 1B |
| iii | 1A | | 1.0-17 | 1B |
| iv | 1A | | 1.0-18 | 1B |
| v | 1A | | 1.0-19 | 1B |
| vi | 1A | | 1.0-20 | 1B |
| vii | 1A | | 1.0-21 | 1B |
| viii | 1A | | 1.0-22 | 1B |
| ix | 1A | | 1.0-23 | 1B |
| x | 1A | | 1.0-24 | 1B |
| xi | 1A | | 1.0-25 | 1B |
| xii | 1A | | 1.0-26 | 1B |
| xiii | 1A | | 1.0-27 | 1B |
| xiv | 1A | | 1.0-28 | 1B |
| xv | 1A | | 1.0-29 | 1B |
| xvi | 1A | | 1.0-30 | 1B |
| xvii | 1A | | 1.0-31 | 1B |
| xviii | 1A | | 1.0-32 | 1B |
| xix | 1A | | 1.0-33 | 1B |
| xx | 1A | | 1.1-1 | 1B |
| xxi | 1A | | 1.1-2 | 1B |
| xxii | 1A | | 1.1-3 | 1B |
| xxiii | 1A | | 1.1-4 | 1B |
| xxiv | 1A | | Fig. 1.1.1 | 0 |
| xxv | 1A | | Fig. 1.1.1A | 1 |
| xxvi | 1A | | Fig. 1.1.2 | 0 |
| xxvii | 1A | | Fig. 1.1.3 | 0 |
| xxviii | 1A | | Fig. 1.1.3A | 1B |
| xxix | 1A | | Fig. 1.1.4 | 1B |
| xxx | 1A | | Fig. 1.1.5 | 1B |
| xxxi | 1A | | 1.2-1 | 1B |
| xxxii | 1A | | 1.2-2 | 1B |
| xxxiii | 1A | | 1.2-3 | 1B |
| xxxiv | 1A | | 1.2-4 | 1B |
| xxxv | 1A | | 1.2-5 | 1B |
| xxxvi | 1A | | 1.2-6 | 1B |
| | | | 1.2-7 | 1B |
| 1.0-1 | 1B | | 1.2-8 | 1B |
| 1.0-2 | 1B | | 1.2-9 | 1B |
| 1.0-3 | 1B | | 1.2-10 | 1B |
| 1.0-4 | 1B | | 1.2-11 | 1B |
| 1.0-5 | 1B | | 1.2-12 | 1B |
| 1.0-6 | 1B | | 1.2-13 | 1B |
| 1.0-7 | 1B | | 1.2-14 | 1B |
| 1.0-8 | 1B | | 1.2-15 | 1B |
| 1.0-9 | 1B | | 1.2-16 | 1B |
| 1.0-10 | 1B | | 1.2-17 | 1B |
| 1.0-11 | 1B | | 1.2-18 | 1B |
| 1.0-12 | 1B | | 1.2-19 | 1B |
| 1.0-13 | 1B | | 1.2-20 | 1B |
| 1.0-14 | 1B | | 1.2-21 | 1B |
| | | | | |

# LIST OF EFFECTIVE PAGES FOR PROPOSED FSAR REVISION 1

| Page | Revision | | Page | Revision |
|---|---|---|---|---|
| | | | | |
| 1.2-22 | 1B | | 1.5-1 | 1B |
| 1.2-23 | 1B | | 1.5-2 | 1B |
| 1.2-24 | 1B | | 1.5-3 | 1B |
| 1.2-25 | 1B | | 26 Drawings w/ 77 sheets | See Section 1.5 |
| 1.2-26 | 1B | | 13 Bills-of-Material w/19 sheets | See Section 1.5 |
| 1.2-27 | 1B | | 1.6-1 | 0 |
| 1.2-28 | 1B | | 1.6-2 | 0 |
| 1.2-29 | 1B | | 1.A-1 | 0 |
| 1.2-30 | 1B | | 1.A-2 | 0 |
| 1.2-31 | 1B | | 1.A-3 | 0 |
| 1.2-32 | 1B | | 1.A-4 | 0 |
| 1.2-33 | 1B | | 1.A-5 | 0 |
| 1.2-34 | 1B | | 1.A-6 | 0 |
| 1.2-35 | 1B | | 1.A-7 | 0 |
| Fig. 1.2.1 | 0 | | Fig. 1.A.1 | 0 |
| Fig. 1.2.1A | 1B | | Fig. 1.A.2 | 0 |
| Fig. 1.2.2 | 0 | | Fig. 1.A-3 | 0 |
| Fig. 1.2.3 | 1 | | Fig. 1.A.4 | 0 |
| Fig. 1.2.4 | 0 | | Fig. 1.A.5 | 0 |
| Fig. 1.2.4A | 1 | | 1.B-1 | 1B |
| Fig. 1.2.5 | 0 | | 1.B-2 | 1B |
| Fig. 1.2.6 | 0 | | 1.B-3 | 1B |
| Fig. 1.2.7 | 1B | | 1.B-4 | 1B |
| Fig. 1.2.8 | 0 | | 1.C-1 | 0 |
| Fig. 1.2.8A | 1B | | 1.C-2 | 0 |
| Fig. 1.2.9 | 0 | | 1.C-3 | 0 |
| Fig. 1.2.10 | 0 | | 1.C-4 | 0 |
| Fig. 1.2.11 | 0 | | 1.C-5 | 0 |
| Fig. 1.2.12 | 0 | | 1.C-6 | 0 |
| Fig. 1.2.13 | 0 | | 1.D-1 | 1B |
| Fig. 1.2.14 | 0 | | 1.D-2 | 1B |
| Fig. 1.2.15 | 0 | | 1.D-3 | 1B |
| Fig. 1.2.16a | 0 | | 1.D-4 | 1B |
| Fig. 1.2.16b | 0 | | 1.D-5 | 1B |
| Fig. 1.2.16c | 0 | | | |
| Fig. 1.2.16d | 0 | | | |
| Fig. 1.2.16e | 0 | | | |
| Fig. 1.2.16f | 0 | | | |
| Fig. 1.2.17a | 0 | | | |
| Fig. 1.2.17b | 0 | | | |
| Fig. 1.2.17c | 0 | | | |
| Fig. 1.2.17d | 0 | | | |
| 1.3-1 | 0 | | | |
| 1.4-1 | 1B | | | |
| 1.4-2 | 1B | | | |
| 1.4-3 | 1B | | | |
| Fig. 1.4.1 | 0 | | | |
| Fig. 1.4.2 | 0 | | | |
| | | | | |
| | | | | |
| | | | | |

# LIST OF EFFECTIVE PAGES FOR PROPOSED FSAR REVISION 1

| Page | Revision | | Page | Revision |
|---|---|---|---|---|
| 2.0-1 | 1B | | 2.1-15 | 1B |
| 2.0-2 | 1B | | 2.1-16 | 1B |
| 2.0-3 | 1B | | 2.1-17 | 1B |
| 2.0-4 | 1B | | 2.1-18 | 1B |
| 2.0-5 | 1B | | 2.1-19 | 1B |
| 2.0-6 | 1B | | 2.1-20 | 1B |
| 2.0-7 | 1B | | 2.1-21 | 1B |
| 2.0-8 | 1B | | 2.1-22 | 1B |
| 2.0-9 | 1B | | 2.1-23 | 1B |
| 2.0-10 | 1B | | 2.1-24 | 1B |
| 2.0-11 | 1B | | 2.1-25 | 1B |
| 2.0-12 | 1B | | 2.1-26 | 1B |
| 2.0-13 | 1B | | 2.1-27 | 1B |
| 2.0-14 | 1B | | 2.1-28 | 1B |
| 2.0-15 | 1B | | 2.1-29 | 1B |
| 2.0-16 | 1B | | 2.1-30 | 1B |
| 2.0-17 | 1B | | Fig. 2.1.1 | 1 |
| 2.0-18 | 1B | | Fig. 2.1.2 | 1 |
| 2.0-19 | 1B | | Fig. 2.1.2A | 1 |
| 2.0-20 | 1B | | Fig. 2.1.2B | 1 |
| 2.0-21 | 1B | | Fig. 2.1.2C | 1 |
| 2.0-22 | 1B | | Fig. 2.1.3 | 0 |
| 2.0-23 | 1B | | Fig. 2.1.4 | 0 |
| 2.0-24 | 1B | | Fig. 2.1.5 | 0 |
| 2.0-25 | 1B | | Fig. 2.1.6 | Deleted in Rev. 1 |
| 2.0-26 | 1B | | Fig. 2.1.7 | 0 |
| 2.0-27 | 1B | | Fig. 2.1.8 | 0 |
| 2.0-28 | 1B | | 2.2-1 | 1B |
| 2.0-29 | 1B | | 2.2-2 | 1B |
| 2.0-30 | 1B | | 2.2-3 | 1B |
| 2.0-31 | 1B | | 2.2-4 | 1B |
| 2.0-32 | 1B | | 2.2-5 | 1B |
| 2.0-33 | 1B | | 2.2-6 | 1B |
| 2.0-34 | 1B | | 2.2-7 | 1B |
| 2.0-35 | 1B | | 2.2-8 | 1B |
| 2.0-36 | 1B | | 2.2-9 | 1B |
| 2.0-37 | 1B | | 2.2-10 | 1B |
| 2.0-38 | 1B | | 2.2-11 | 1B |
| 2.1-1 | 1B | | 2.2-12 | 1B |
| 2.1-2 | 1B | | 2.2-13 | 1B |
| 2.1-3 | 1B | | 2.2-14 | 1B |
| 2.1-4 | 1B | | 2.2-15 | 1B |
| 2.1-5 | 1B | | 2.2-16 | 1B |
| 2.1-6 | 1B | | 2.2-17 | 1B |
| 2.1-7 | 1B | | 2.2-18 | 1B |
| 2.1-8 | 1B | | 2.2-19 | 1B |
| 2.1-9 | 1B | | 2.2-20 | 1B |
| 2.1-10 | 1B | | 2.2-21 | 1B |
| 2.1-11 | 1B | | 2.2-22 | 1B |
| 2.1-12 | 1B | | 2.2-23 | 1B |
| 2.1-13 | 1B | | 2.2-24 | 1B |
| 2.1-14 | 1B | | 2.2-25 | 1B |

# LIST OF EFFECTIVE PAGES FOR PROPOSED FSAR REVISION 1

| Page | Revision | | Page | Revision |
|---|---|---|---|---|
| 2.2-26 | 1B | | 2.4-1 | 1B |
| 2.2-27 | 1B | | 2.4-2 | 1B |
| 2.2-28 | 1B | | 2.4-3 | 1B |
| 2.2-29 | 1B | | 2.5-1 | 0 |
| 2.2-30 | 1B | | 2.6-1 | 1B |
| 2.2-31 | 1B | | 2.6-2 | 1B |
| 2.2-32 | 1B | | 2.6-3 | 1B |
| 2.2-33 | 1B | | 2A-1 | 1B |
| 2.2-34 | 1B | | 2A-2 | 1B |
| 2.2-35 | 1B | | 2A-3 | 1B |
| 2.2-36 | 1B | | 2A-4 | 1B |
| 2.2-37 | 1B | | Fig. 2.A.1 | 1B |
| 2.2-38 | 1B | | | |
| 2.2-39 | 1B | | | |
| 2.2-40 | 1B | | | |
| 2.2-41 | 1B | | | |
| 2.2-42 | 1B | | | |
| 2.2-43 | 1B | | | |
| 2.2-44 | 1B | | | |
| 2.2-45 | 1B | | | |
| 2.2-46 | 1B | | | |
| 2.2-47 | 1B | | | |
| 2.2-48 | 1B | | | |
| 2.2-49 | 1B | | | |
| 2.2-50 | 1B | | | |
| 2.2-51 | 1B | | | |
| 2.2-52 | 1B | | | |
| 2.3-1 | 1B | | | |
| 2.3-2 | 1B | | | |
| 2.3-3 | 1B | | | |
| 2.3-4 | 1B | | | |
| 2.3-5 | 1B | | | |
| 2.3-6 | 1B | | | |
| 2.3-7 | 1B | | | |
| 2.3-8 | 1B | | | |
| 2.3-9 | 1B | | | |
| 2.3-10 | 1B | | | |
| 2.3-11 | 1B | | | |
| 2.3-12 | 1B | | | |
| 2.3-13 | 1B | | | |
| 2.3-14 | 1B | | | |
| 2.3-15 | 1B | | | |
| 2.3-16 | 1B | | | |
| 2.3-17 | 1B | | | |
| 2.3-18 | 1B | | | |
| 2.3-19 | 1B | | | |
| 2.3-20 | 1B | | | |
| 2.3-21 | 1B | | | |
| Fig. 2.3.1 | 0 | | | |
| Fig. 2.3.2 | 0 | | | |
| Fig. 2.3.3 | 0 | | | |
| Fig. 2.3.4 | 0 | | | |

# LIST OF EFFECTIVE PAGES FOR PROPOSED FSAR REVISION 1

| Page | Revision | | Page | Revision |
|---|---|---|---|---|
| 3.0-1 | 1B | | 3.1-43 | 1B |
| 3.0-2 | 1B | | Fig. 3.1.1 | 1B |
| 3.0-3 | 1B | | Fig. 3.1.2 | 1B |
| 3.0-4 | 1B | | Fig. 3.1.3 | 1B |
| 3.0-5 | 1B | | 3.2-1 | 1 |
| 3.0-6 | 1B | | 3.2-2 | 1 |
| 3.0-7 | 1B | | 3.2-3 | 1 |
| 3.0-8 | 1B | | 3.2-4 | 1 |
| 3.0-9 | 1B | | 3.2-5 | 1 |
| 3.0-10 | 1B | | 3.2-6 | 1 |
| 3.1-1 | 1B | | 3.2-7 | 1 |
| 3.1-2 | 1B | | 3.2-8 | 1 |
| 3.1-3 | 1B | | 3.3-1 | 1B |
| 3.1-4 | 1B | | 3.3-2 | 1B |
| 3.1-5 | 1B | | 3.3-3 | 1B |
| 3.1-6 | 1B | | 3.3-4 | 1B |
| 3.1-7 | 1B | | 3.3-5 | 1B |
| 3.1-8 | 1B | | 3.3-6 | 1B |
| 3.1-9 | 1B | | 3.3-7 | 1B |
| 3.1-10 | 1B | | 3.3-8 | 1B |
| 3.1-11 | 1B | | 3.3-9 | 1B |
| 3.1-12 | 1B | | 3.3-10 | 1B |
| 3.1-13 | 1B | | 3.4-1 | 1B |
| 3.1-14 | 1B | | 3.4-2 | 1B |
| 3.1-15 | 1B | | 3.4-3 | 1B |
| 3.1-16 | 1B | | 3.4-4 | 1B |
| 3.1-17 | 1B | | 3.4-5 | 1B |
| 3.1-18 | 1B | | 3.4-6 | 1B |
| 3.1-19 | 1B | | 3.4-7 | 1B |
| 3.1-20 | 1B | | 3.4-8 | 1B |
| 3.1-21 | 1B | | 3.4-9 | 1B |
| 3.1-22 | 1B | | 3.4-10 | 1B |
| 3.1-23 | 1B | | 3.4-11 | 1B |
| 3.1-24 | 1B | | 3.4-12 | 1B |
| 3.1-25 | 1B | | 3.4-13 | 1B |
| 3.1-26 | 1B | | 3.4-14 | 1B |
| 3.1-27 | 1B | | 3.4-15 | 1B |
| 3.1-28 | 1B | | 3.4-16 | 1B |
| 3.1-29 | 1B | | 3.4-17 | 1B |
| 3.1-30 | 1B | | 3.4-18 | 1B |
| 3.1-31 | 1B | | 3.4-19 | 1B |
| 3.1-32 | 1B | | 3.4-20 | 1B |
| 3.1-33 | 1B | | 3.4-21 | 1B |
| 3.1-34 | 1B | | 3.4-22 | 1B |
| 3.1-35 | 1B | | 3.4-23 | 1B |
| 3.1-36 | 1B | | 3.4-24 | 1B |
| 3.1-37 | 1B | | 3.4-25 | 1B |
| 3.1-38 | 1B | | 3.4-26 | 1B |
| 3.1-39 | 1B | | 3.4-27 | 1B |
| 3.1-40 | 1B | | 3.4-28 | 1B |
| 3.1-41 | 1B | | 3.4-29 | 1B |
| 3.1-42 | 1B | | 3.4-30 | 1B |

# LIST OF EFFECTIVE PAGES FOR PROPOSED FSAR REVISION 1

| Page | Revision | | Page | Revision |
|---|---|---|---|---|
| 3.4-31 | 1B | | 3.4-83 | 1B |
| 3.4-32 | 1B | | 3.4-84 | 1B |
| 3.4-33 | 1B | | 3.4-85 | 1B |
| 3.4-34 | 1B | | 3.4-86 | 1B |
| 3.4-35 | 1B | | 3.4-87 | 1B |
| 3.4-36 | 1B | | 3.4-88 | 1B |
| 3.4-37 | 1B | | 3.4-89 | 1B |
| 3.4-38 | 1B | | 3.4-90 | 1B |
| 3.4-39 | 1B | | 3.4-91 | 1B |
| 3.4-40 | 1B | | 3.4-92 | 1B |
| 3.4-41 | 1B | | 3.4-93 | 1B |
| 3.4-42 | 1B | | 3.4-94 | 1B |
| 3.4-43 | 1B | | 3.4-95 | 1B |
| 3.4-44 | 1B | | 3.4-96 | 1B |
| 3.4-45 | 1B | | 3.4-97 | 1B |
| 3.4-46 | 1B | | 3.4-98 | 1B |
| 3.4-47 | 1B | | 3.4-99 | 1B |
| 3.4-48 | 1B | | 3.4-100 | 1B |
| 3.4-49 | 1B | | 3.4-101 | 1B |
| 3.4-50 | 1B | | 3.4-102 | 1B |
| 3.4-51 | 1B | | 3.4-103 | 1B |
| 3.4-52 | 1B | | 3.4-104 | 1B |
| 3.4-53 | 1B | | 3.4-105 | 1B |
| 3.4-54 | 1B | | 3.4-106 | 1B |
| 3.4-55 | 1B | | 3.4-107 | 1B |
| 3.4-56 | 1B | | 3.4-108 | 1B |
| 3.4-57 | 1B | | 3.4-109 | 1B |
| 3.4-58 | 1B | | 3.4-110 | 1B |
| 3.4-59 | 1B | | 3.4-111 | 1B |
| 3.4-60 | 1B | | 3.4-112 | 1B |
| 3.4-61 | 1B | | 3.4-113 | 1B |
| 3.4-62 | 1B | | 3.4-114 | 1B |
| 3.4-63 | 1B | | 3.4-115 | 1B |
| 3.4-64 | 1B | | 3.4-116 | 1B |
| 3.4-65 | 1B | | 3.4-117 | 1B |
| 3.4-66 | 1B | | 3.4-118 | 1B |
| 3.4-67 | 1B | | 3.4-119 | 1B |
| 3.4-68 | 1B | | 3.4-120 | 1B |
| 3.4-69 | 1B | | 3.4-121 | 1B |
| 3.4-70 | 1B | | Fig. 3.4.1 | 0 |
| 3.4-71 | 1B | | Fig. 3.4.2 | 1 |
| 3.4-72 | 1B | | Fig. 3.4.3 | 0 |
| 3.4-73 | 1B | | Fig. 3.4.4 | 0 |
| 3.4-74 | 1B | | Fig. 3.4.5 | 1 |
| 3.4-75 | 1B | | Fig. 3.4.6 | 0 |
| 3.4-76 | 1B | | Fig. 3.4.7 | 0 |
| 3.4-77 | 1B | | Fig. 3.4.8 | 0 |
| 3.4-78 | 1B | | Fig. 3.4.9 | 0 |
| 3.4-79 | 1B | | Fig. 3.4.10 | 0 |
| 3.4-80 | 1B | | Fig. 3.4.11 | 0 |
| 3.4-81 | 1B | | Fig. 3.4.12 | 0 |
| 3.4-82 | 1B | | Fig. 3.4.13 | 0 |

# LIST OF EFFECTIVE PAGES FOR PROPOSED FSAR REVISION 1

| Page | Revision | | Page | Revision |
|---|---|---|---|---|
| Fig. 3.4.14 | 0 | | 3.5-17 | 0 |
| Fig. 3.4.15 | 0 | | 3.5-18 | 0 |
| Fig. 3.4.16 | 0 | | 3.5-19 | 0 |
| Fig. 3.4.16a | 0 | | Fig. 3.5.1 | 0 |
| Fig. 3.4.16b | 0 | | Fig. 3.5.2 | 0 |
| Fig. 3.4.17 | 0 | | Fig. 3.5.3 | 0 |
| Fig. 3.4.18 | 0 | | Fig. 3.5.4 | 0 |
| Fig. 3.4.19 | 0 | | Fig. 3.5.5 | 0 |
| Fig. 3.4.20 | 0 | | Fig. 3.5.6 | 0 |
| Fig. 3.4.21 | 0 | | Fig. 3.5.7 | 0 |
| Fig. 3.4.22 | 0 | | Fig. 3.5.8 | 0 |
| Fig. 3.4.23 | 0 | | Fig. 3.5.9 | 0 |
| Fig. 3.4.24 | 0 | | 3.6-1 | 1B |
| Fig. 3.4.25 | 0 | | 3.6-2 | 1B |
| Fig. 3.4.26 | 0 | | 3.6-3 | 1B |
| Fig. 3.4.27 | 0 | | 3.6-4 | 1B |
| Fig. 3.4.28 | 0 | | 3.6-5 | 1B |
| Fig. 3.4.29 | 0 | | 3.6-6 | 1B |
| Fig. 3.4.30 | 1 | | 3.6-7 | 1B |
| Fig. 3.4.31 | 1 | | 3.6-8 | 1B |
| Fig. 3.4.32 | 1 | | 3.6-9 | 1B |
| Fig. 3.4.33 | 1 | | 3.6-10 | 1B |
| Fig. 3.4.34 | 1 | | 3.7-1 | 0 |
| Fig. 3.4.35 | 1 | | 3.7-2 | 0 |
| Fig. 3.4.36 | 1 | | 3.7-3 | 0 |
| Fig. 3.4.37 | 1 | | 3.7-4 | 0 |
| Fig. 3.4.38 | 1 | | 3.7-5 | 0 |
| Fig. 3.4.39 | 1 | | 3.7-6 | 0 |
| Fig. 3.4.40 | 1 | | 3.7-7 | 0 |
| Fig. 3.4.41 | 1 | | 3.7-8 | 0 |
| Fig. 3.4.42 | 1 | | 3.7-9 | 0 |
| Fig. 3.4.43 | 1 | | 3.7-10 | 0 |
| Fig. 3.4.44 | 1 | | 3.7-11 | 0 |
| Fig. 3.4.45 | 1 | | 3.7-12 | 0 |
| Fig. 3.4.46 | 1 | | 3.7-13 | 0 |
| Fig. 3.4.47 | 1 | | 3.7-14 | 0 |
| 3.5-1 | 0 | | 3.8-1 | 1B |
| 3.5-2 | 0 | | 3.8-2 | 1B |
| 3.5-3 | 0 | | 3.A-1 | 1 |
| 3.5-4 | 0 | | 3.A-2 | 1 |
| 3.5-5 | 0 | | 3.A-3 | 1 |
| 3.5-6 | 0 | | 3.A-4 | 1 |
| 3.5-7 | 0 | | 3.A-5 | 1 |
| 3.5-8 | 0 | | 3.A-6 | 1 |
| 3.5-9 | 0 | | 3.A-7 | 1 |
| 3.5-10 | 0 | | 3.A-8 | 1 |
| 3.5-11 | 0 | | 3.A-9 | 1 |
| 3.5-12 | 0 | | 3.A-10 | 1 |
| 3.5-13 | 0 | | 3.A-11 | 1 |
| 3.5-14 | 0 | | 3.A-12 | 1 |
| 3.5-15 | 0 | | 3.A-13 | 1 |
| 3.5-16 | 0 | | 3.A-14 | 1 |

# LIST OF EFFECTIVE PAGES FOR PROPOSED FSAR REVISION 1

| Page | Revision | | Page | Revision |
|---|---|---|---|---|
| 3.A-15 | 1 | | 3.B-20 | 0 |
| 3.A-16 | 1 | | 3.B-21 | 0 |
| 3.A-17 | 1 | | 3.B-22 | 0 |
| Fig. 3.A.1 | 0 | | 3.B-23 | 0 |
| Fig. 3.A.2 | 0 | | 3.B-24 | 0 |
| Fig. 3.A.3 | 0 | | 3.B-25 | 0 |
| Fig. 3.A.4 | 0 | | 3.B-26 | 0 |
| Fig. 3.A.5 | 0 | | 3.B-27 | 0 |
| Fig. 3.A.6 | 0 | | 3.B-28 | 0 |
| Fig. 3.A.7 | 0 | | 3.B-29 | 0 |
| Fig. 3.A.8 | 0 | | 3.B-30 | 0 |
| Fig. 3.A.9 | 0 | | 3.B-31 | 0 |
| Fig. 3.A.10 | 0 | | 3.B-32 | 0 |
| Fig. 3.A.11 | 0 | | 3.B-33 | 0 |
| Fig. 3.A.12 | 0 | | 3.B-34 | 0 |
| Fig. 3.A.13 | 0 | | 3.B-35 | 0 |
| Fig. 3.A.14 | 0 | | 3.B-36 | 0 |
| Fig. 3.A.15 | 0 | | 3.B-37 | 0 |
| Fig. 3.A.16 | 0 | | 3.B-38 | 0 |
| Fig. 3.A.17 | 0 | | 3.B-39 | 0 |
| Fig. 3.A.18 | 0 | | 3.B-40 | 0 |
| Fig. 3.A.19 | Deleted | | 3.B-41 | 0 |
| Fig. 3.A.20 | Deleted | | 3.B-42 | 0 |
| Fig. 3.A.21 | Deleted | | 3.B-43 | 0 |
| Fig. 3.A.22 | Deleted | | 3.B-44 | 0 |
| Fig. 3.A.23 | Deleted | | 3.B-45 | 0 |
| Fig. 3.A.24 | Deleted | | 3.B-46 | 0 |
| Fig. 3.A.25 | Deleted | | 3.B-47 | 0 |
| Fig. 3.A.26 | Deleted | | 3.B-48 | 0 |
| Fig. 3.A.27 | Deleted | | 3.B-49 | 0 |
| Fig. 3.A.28 | Deleted | | 3.B-50 | 0 |
| Fig. 3.A.29 | Deleted | | 3.B-51 | 0 |
| Fig. 3.A.30 | Deleted | | 3.B-52 | 0 |
| 3.B-1 | 0 | | 3.B-53 | 0 |
| 3.B-2 | 0 | | 3.B-54 | 0 |
| 3.B-3 | 0 | | 3.B-55 | 0 |
| 3.B-4 | 0 | | 3.B-56 | 0 |
| 3.B-5 | 0 | | 3.B-57 | 0 |
| 3.B-6 | 0 | | 3.B-58 | 0 |
| 3.B-7 | 0 | | 3.B-59 | 0 |
| 3.B-8 | 0 | | 3.B-60 | 0 |
| 3.B-9 | 0 | | 3.B-61 | 0 |
| 3.B-10 | 0 | | 3.B-62 | 0 |
| 3.B-11 | 0 | | 3.C-1 | 0 |
| 3.B-12 | 0 | | 3.C-2 | 0 |
| 3.B-13 | 0 | | 3.C-3 | 0 |
| 3.B-14 | 0 | | 3.C-4 | 0 |
| 3.B-15 | 0 | | 3.C-5 | 0 |
| 3.B-16 | 0 | | 3.C-6 | 0 |
| 3.B-17 | 0 | | 3.C-7 | 0 |
| 3.B-18 | 0 | | 3.C-8 | 0 |
| 3.B-19 | 0 | | Fig. 3.C.1 | 0 |

# LIST OF EFFECTIVE PAGES FOR PROPOSED FSAR REVISION 1

| Page | Revision | | Page | Revision |
|---|---|---|---|---|
| Fig. 3.C.2 | 0 | | 3.G-6 | 0 |
| Fig. 3.C.3 | 0 | | 3.G-7 | 0 |
| 3.D-1 | 1 | | 3.G-8 | 0 |
| 3.D-2 | 1 | | 3.G-9 | 0 |
| 3.D-3 | 1 | | 3.G-10 | 0 |
| 3.D-4 | 1 | | 3.G-11 | 0 |
| 3.D-5 | 1 | | 3.G-12 | 0 |
| 3.D-6 | 1 | | 3.G-13 | 0 |
| 3.D-7 | 1 | | Fig. 3.G.1 | 0 |
| 3.D-8 | 1 | | Fig. 3.G.2 | 0 |
| 3.D-9 | 1 | | Fig. 3.G.3 | 0 |
| 3.D-10 | 1 | | Fig. 3.G.4 | 0 |
| 3.D-11 | 1 | | Fig. 3.G.5 | 0 |
| 3.D-12 | 1 | | 3.H-1 | 0 |
| 3.D-13 | 1 | | 3.H-2 | 0 |
| Fig. 3.D.1 | 0 | | 3.H-3 | 0 |
| Fig. 3.D.2a | 0 | | 3.H-4 | 0 |
| Fig. 3.D.2b | 0 | | 3.H-5 | 0 |
| Fig. 3.D.2c | 0 | | 3.H-6 | 0 |
| Fig. 3.D.3 | 0 | | 3.H-7 | 0 |
| Fig. 3.D.4a | 0 | | Fig. 3.H.1 | 0 |
| Fig. 3.D.4b | 0 | | 3.I-1 | 1 |
| Fig. 3.D.4c | 0 | | 3.I-2 | 1 |
| Fig. 3.D.5a | 0 | | 3.I-3 | 1 |
| Fig. 3.D.5b | 0 | | 3.I-4 | 1 |
| Fig. 3.D.5c | 0 | | 3.I-5 | 1 |
| 3.E-1 | 0 | | 3.I-6 | 1 |
| 3.E-2 | 0 | | 3.I-7 | 1 |
| 3.E-3 | 0 | | 3.I-8 | 1 |
| 3.E-4 | 0 | | 3.I-9 | 1 |
| 3.E-5 | 0 | | 3.I-10 | 1 |
| 3.E-6 | 0 | | Fig. 3.I.1 | 0 |
| 3.E-7 | 0 | | 3.K-1 | 0 |
| 3.E-8 | 0 | | 3.K-2 | 0 |
| 3.E-9 | 0 | | 3.K-3 | 0 |
| 3.E-10 | 0 | | 3.K-4 | 0 |
| Fig. 3.E.1 | 0 | | 3.K-5 | 0 |
| Fig. 3.E.2 | 0 | | 3.K-6 | 0 |
| Fig. 3.E.3 | 0 | | 3.K-7 | 0 |
| 3.F-1 | 0 | | 3.L-1 | 0 |
| 3.F-2 | 0 | | 3.L-2 | 0 |
| 3.F-3 | 0 | | 3.L-3 | 0 |
| 3.F-4 | 0 | | 3.L-4 | 0 |
| Fig. 3.F.1 | 0 | | 3.L-5 | 0 |
| Fig. 3.F.2 | 0 | | 3.L-6 | 0 |
| Fig. 3.F.3 | 0 | | 3.M-1 | 1 |
| Fig. 3.F.4 | 0 | | 3.M-2 | 1 |
| 3.G-1 | 0 | | 3.M-3 | 1 |
| 3.G-2 | 0 | | 3.M-4 | 1 |
| 3.G-3 | 0 | | 3.M-5 | 1 |
| 3.G-4 | 0 | | 3.M-6 | 1 |
| 3.G-5 | 0 | | 3.M-7 | 1 |

# LIST OF EFFECTIVE PAGES FOR PROPOSED FSAR REVISION 1

| Page | Revision | | Page | Revision |
|---|---|---|---|---|
| 3.M-8 | 1 | | 3.X-1 | 0 |
| 3.M-9 | 1 | | 3.X-2 | 0 |
| 3.M-10 | 1 | | 3.X-3 | 0 |
| 3.M-11 | 1 | | 3.X-4 | 0 |
| 3.M-12 | 1 | | 3.X-5 | 0 |
| 3.M-13 | 1 | | 3.X-6 | 0 |
| 3.M-14 | 1 | | 3.X-7 | 0 |
| 3.M-15 | 1 | | 3.X-8 | 0 |
| 3.M-16 | 1 | | 3.X-9 | 0 |
| 3.M-17 | 1 | | 3.X-10 | 0 |
| 3.M-18 | 1 | | Fig. 3.X.1 | 0 |
| 3.M-19 | 1 | | Fig. 3.X.2 | 0 |
| 3.M-20 | 1 | | Fig. 3.X.3 | 0 |
| 3.N-1 | 1B | | Fig. 3.X.4 | 0 |
| 3.O-1 | 1B | | Fig. 3.X.5 | 0 |
| 3.P-1 | 1B | | 3.Y-1 | 1 |
| 3.Q-1 | 1B | | 3.Y-2 | 1 |
| 3.R-1 | 1B | | 3.Y-3 | 1 |
| 3.S-1 | 1B | | 3.Y-4 | 1 |
| 3.T-1 | 1B | | 3.Y-5 | 1 |
| 3.U-1 | 1 | | 3.Y-6 | 1 |
| 3.U-2 | 1 | | 3.Y-7 | 1 |
| 3.U-3 | 1 | | 3.Y-8 | 1 |
| 3.U-4 | 1 | | 3.Y-9 | 1 |
| 3.U-5 | 1 | | 3.Y-10 | 1 |
| 3.U-6 | 1 | | 3.Y-11 | 1 |
| 3.U-7 | 1 | | 3.Y-12 | 1 |
| 3.U-8 | 1 | | 3.Y-13 | 1 |
| 3.U-9 | 1 | | 3.Y-14 | 1 |
| 3.U-10 | 1 | | 3.Y-15 | 1 |
| Fig. 3.U.1 | 0 | | 3.Y-16 | 1 |
| 3.V-1 | 1 | | 3.Y-17 | 1 |
| 3.V-2 | 1 | | 3.Y-18 | 1 |
| 3.V-3 | 1 | | 3.Y-19 | 1 |
| 3.V-4 | 1 | | 3.Y-20 | 1 |
| 3.V-5 | 1 | | 3.Y-21 | 1 |
| 3.V-6 | 1 | | Fig. 3.Y.1 | 0 |
| 3.V-7 | 1 | | Fig. 3.Y.2 | 0 |
| 3.V-8 | 1 | | 3.Z-1 | 0 |
| 3.V-9 | 1 | | 3.Z-2 | 0 |
| 3.V-10 | 1 | | 3.Z-3 | 0 |
| 3.W-1 | 1 | | 3.Z-4 | 0 |
| 3.W-2 | 1 | | 3.Z-5 | 0 |
| 3.W-3 | 1 | | 3.Z-6 | 0 |
| 3.W-4 | 1 | | 3.Z-7 | 0 |
| 3.W-5 | 1 | | 3.Z-8 | 0 |
| 3.W-6 | 1 | | 3.Z-10 | 0 |
| 3.W-7 | 1 | | 3.Z-11 | 0 |
| 3.W-8 | 1 | | 3.Z-12 | 0 |
| 3.W-9 | 1 | | Fig. 3.Z.1 | 0 |
| 3.W-10 | 1 | | Fig. 3.Z.2 | 0 |
| Fig. 3.W.1 | 0 | | Fig. 3.Z.3 | 0 |

# LIST OF EFFECTIVE PAGES FOR PROPOSED FSAR REVISION 1

| Page | Revision | | Page | Revision |
|---|---|---|---|---|
| Fig. 3.Z.4 | 0 | | 3.AD-8 | 1 |
| Fig. 3.Z.5 | 0 | | 3.AD-9 | 1 |
| Fig. 3.Z.6 | 0 | | 3.AD-10 | 1 |
| 3.AA-1 | 0 | | 3.AD-11 | 1 |
| 3.AA-2 | 0 | | 3.AD-12 | 1 |
| 3.AA-3 | 0 | | 3.AD-13 | 1 |
| 3.AA-4 | 0 | | 3.AD-14 | 1 |
| 3.AA-5 | 0 | | 3.AD-15 | 1 |
| 3.AA-6 | 0 | | 3.AD-16 | 1 |
| 3.AA-7 | 0 | | 3.AD-17 | 1 |
| 3.AA-8 | 0 | | 3.AD-18 | 1 |
| Fig. 3.AA.1 | 0 | | Fig. 3.AD.1 | 0 |
| Fig. 3.AA.2 | 0 | | Fig. 3.AD.2 | 0 |
| Fig. 3.AA.3 | 0 | | Fig. 3.AD.3 | 0 |
| Fig. 3.AA.4 | 0 | | 3.AE-1 | 0 |
| Fig. 3.AA.5 | 0 | | 3.AE-2 | 0 |
| Fig. 3.AA.6 | 0 | | 3.AE-3 | 0 |
| Fig. 3.AA.7 | 0 | | 3.AE-4 | 0 |
| Fig. 3.AA.8 | 0 | | 3.AE-5 | 0 |
| 3.AB-1 | 0 | | 3.AE-6 | 0 |
| 3.AB-2 | 0 | | Fig. 3.AE.1a | 0 |
| 3.AB-3 | 0 | | Fig. 3.AE.1b | 0 |
| 3.AB-4 | 0 | | Fig. 3.AE.1c | 0 |
| 3.AB-5 | 0 | | Fig. 3.AE.2 | 0 |
| 3.AB-6 | 0 | | Fig. 3.AE.3 | 0 |
| 3.AB-7 | 0 | | Fig. 3.AE.4 | 0 |
| 3.AB-8 | 0 | | 3.AF-1 | 1 |
| 3.AB-9 | 0 | | 3.AF-2 | 1 |
| 3.AB-10 | 0 | | 3.AF-3 | 1 |
| 3.AB-11 | 0 | | 3.AF-4 | 1 |
| 3.AB-12 | 0 | | 3.AF-5 | 1 |
| 3.AB-13 | 0 | | 3.AF-6 | 1 |
| 3.AB-14 | 0 | | 3.AF-7 | 1 |
| 3.AC-1 | 1 | | 3.AF-8 | 1 |
| 3.AC-2 | 1 | | 3.AG-1 | 0 |
| 3.AC-3 | 1 | | 3.AG-2 | 0 |
| 3.AC-4 | 1 | | 3.AG-3 | 0 |
| 3.AC-5 | 1 | | 3.AG-4 | 0 |
| 3.AC-6 | 1 | | 3.AG-5 | 0 |
| 3.AC-7 | 1 | | 3.AG-6 | 0 |
| 3.AC-8 | 1 | | 3.AG-7 | 0 |
| 3.AC-9 | 1 | | 3.AG-8 | 0 |
| 3.AC-10 | 1 | | 3.AG-9 | 0 |
| 3.AC-11 | 1 | | 3.AG-10 | 0 |
| 3.AC-12 | 1 | | 3.AH-1 | 0 |
| 3.AD-1 | 1 | | 3.AH-2 | 0 |
| 3.AD-2 | 1 | | 3.AH-3 | 0 |
| 3.AD-3 | 1 | | 3.AH-4 | 0 |
| 3.AD-4 | 1 | | 3.AH-5 | 0 |
| 3.AD-5 | 1 | | 3.AH-6 | 0 |
| 3.AD-6 | 1 | | 3.AH-7 | 0 |
| 3.AD-7 | 1 | | 3.AH-8 | 0 |

# LIST OF EFFECTIVE PAGES FOR PROPOSED FSAR REVISION 1

| Page | Revision | | Page | Revision |
|---|---|---|---|---|
| 3.AI-1 | 0 | | 3.AK-9 | 0 |
| 3.AI-2 | 0 | | 3.AK-10 | 0 |
| 3.AI-3 | 0 | | 3.AK-11 | 0 |
| 3.AI-4 | 0 | | 3.AK-12 | 0 |
| 3.AI-5 | 0 | | 3.AK-13 | 0 |
| 3.AI-6 | 0 | | 3.AK-14 | 0 |
| 3.AI-7 | 0 | | 3.AK-15 | 0 |
| 3.AI-8 | 0 | | 3.AK-16 | 0 |
| 3.AI-9 | 0 | | 3.AK-17 | 0 |
| 3.AI-10 | 0 | | 3.AK-18 | 0 |
| 3.AI-11 | 0 | | 3.AL-1 | 0 |
| 3.AI-12 | 0 | | 3.AL-2 | 0 |
| 3.AI-13 | 0 | | 3.AL-3 | 0 |
| 3.AI-14 | 0 | | 3.AL-4 | 0 |
| 3.AI-15 | 0 | | 3.AL-5 | 0 |
| 3.AI-16 | 0 | | 3.AL-6 | 0 |
| 3.AI-17 | 0 | | 3.AL-7 | 0 |
| 3.AI-18 | 0 | | 3.AL-8 | 0 |
| 3.AI-19 | 0 | | 3.AL-9 | 0 |
| Fig. 3.AI.1 | 0 | | 3.AL-10 | 0 |
| Fig. 3.AI.2 | 0 | | 3.AM-1 | 0 |
| Fig. 3.AI.3 | 0 | | 3.AM-2 | 0 |
| Fig. 3.AI.4 | 0 | | 3.AM-3 | 0 |
| Fig. 3.AI.5 | 0 | | 3.AM-4 | 0 |
| Fig. 3.AI.6 | 0 | | 3.AM-5 | 0 |
| 3.AJ-1 | 0 | | 3.AM-6 | 0 |
| 3.AJ-2 | 0 | | 3.AM-7 | 0 |
| 3.AJ-3 | 0 | | 3.AM-8 | 0 |
| 3.AJ-4 | 0 | | 3.AM-9 | 0 |
| 3.AJ-5 | 0 | | 3.AM-10 | 0 |
| 3.AJ-6 | 0 | | 3.AM-11 | 0 |
| 3.AJ-7 | 0 | | 3.AM-12 | 0 |
| 3.AJ-8 | 0 | | 3.AM-13 | 0 |
| 3.AJ-9 | 0 | | 3.AM-14 | 0 |
| 3.AJ-10 | 0 | | 3.AM-15 | 0 |
| 3.AJ-11 | 0 | | 3.AM-16 | 0 |
| 3.AJ-12 | 0 | | 3.AM-17 | 0 |
| 3.AJ-13 | 0 | | 3.AM-18 | 0 |
| 3.AJ-14 | 0 | | 3.AM-19 | 0 |
| 3.AJ-15 | 0 | | 3.AM-20 | 0 |
| 3.AJ-16 | 0 | | 3.AM-21 | 0 |
| Fig. 3.AJ.1 | 0 | | 3.AM-22 | 0 |
| Fig. 3.AJ.2 | 0 | | 3.AM-23 | 0 |
| Fig. 3.AJ.3 | 0 | | 3.AM-24 | 0 |
| 3.AK-1 | 0 | | 3.AM-25 | 0 |
| 3.AK-2 | 0 | | 3.AM-26 | 0 |
| 3.AK-3 | 0 | | 3.AM-27 | 0 |
| 3.AK-4 | 0 | | 3.AM-28 | 0 |
| 3.AK-5 | 0 | | 3.AM-29 | 0 |
| 3.AK-6 | 0 | | 3.AM-30 | 0 |
| 3.AK-7 | 0 | | 3.AN-1 | 0 |
| 3.AK-8 | 0 | | 3.AN-2 | 0 |

# LIST OF EFFECTIVE PAGES FOR PROPOSED FSAR REVISION 1

| Page | Revision | | Page | Revision |
|---|---|---|---|---|
| 3.AN-3 | 0 | | 3.AQ-9 | 1 |
| 3.AN-4 | 0 | | 3.AQ-10 | 1 |
| 3.AN-5 | 0 | | 3.AR-1 | 1 |
| 3.AN-6 | 0 | | 3.AR-2 | 1 |
| 3.AN-7 | 0 | | 3.AR-3 | 1 |
| 3.AN-8 | 0 | | 3.AR-4 | 1 |
| 3.AN-9 | 0 | | 3.AR-5 | 1 |
| 3.AN-10 | 0 | | 3.AR-6 | 1 |
| 3.AN-11 | 0 | | 3.AR-7 | 1 |
| 3.AN-12 | 0 | | 3.AR-8 | 1 |
| 3.AN-13 | 0 | | 3.AR-9 | 1 |
| 3.AN-14 | 0 | | 3.AR-10 | 1 |
| Fig. 3.AN.1 | 0 | | 3.AR-11 | 1 |
| Fig. 3.AN.2 | 0 | | 3.AS-1 | 1 |
| Fig. 3.AN.3 | 0 | | 3.AS-2 | 1 |
| Fig. 3.AN.4 | 0 | | 3.AS-3 | 1 |
| Fig. 3.AN.5 | 0 | | 3.AS-4 | 1 |
| Fig. 3.AN.6 | 0 | | 3.AS-5 | 1 |
| Fig. 3.AN.7 | 0 | | 3.AS-6 | 1 |
| Fig. 3.AN.8 | 0 | | 3.AS-7 | 1 |
| Fig. 3.AN.9 | 0 | | 3.AS-8 | 1 |
| Fig. 3.AN.10 | 0 | | 3.AS-9 | 1 |
| Fig. 3.AN.11 | 0 | | 3.AS-10 | 1 |
| Fig. 3.AN.12 | 0 | | 3.AS-11 | 1 |
| Fig. 3.AN.13 | 0 | | 3.AS-12 | 1 |
| Fig. 3.AN.14 | 0 | | 3.AS-13 | 1 |
| Fig. 3.AN.15 | 0 | | | |
| Fig. 3.AN.16 | 0 | | | |
| Fig. 3.AN.17 | 0 | | | |
| Fig. 3.AN.18 | 0 | | | |
| Fig. 3.AN.19 | 0 | | | |
| Fig. 3.AN.20 | 0 | | | |
| Fig. 3.AN.21 | 0 | | | |
| Fig. 3.AN.22 | 0 | | | |
| Fig. 3.AN.23 | 0 | | | |
| Fig. 3.AN.24 | 0 | | | |
| Fig. 3.AN.25 | 0 | | | |
| Fig. 3.AN.26 | 0 | | | |
| Fig. 3.AN.28 | 0 | | | |
| Fig. 3.AN.29 | 0 | | | |
| Fig. 3.AN.20 | 0 | | | |
| 3.AO-1 | 1B | | | |
| 3.AP-1 | 1B | | | |
| 3.AQ-1 | 1 | | | |
| 3.AQ-2 | 1 | | | |
| 3.AQ-3 | 1 | | | |
| 3.AQ-4 | 1 | | | |
| 3.AQ-5 | 1 | | | |
| 3.AQ-6 | 1 | | | |
| 3.AQ-7 | 1 | | | |
| 3.AQ-8 | 1 | | | |
| | | | | |

# LIST OF EFFECTIVE PAGES FOR PROPOSED FSAR REVISION 1

| Page | Revision | | Page | Revision |
|---|---|---|---|---|
| 4.0-1 | 1B | | 4.4-5 | 1B |
| 4.0-2 | 1B | | 4.4-6 | 1B |
| 4.0-3 | 1B | | 4.4-7 | 1B |
| 4.1-1 | 1B | | 4.4-8 | 1B |
| 4.1-2 | 1B | | 4.4-9 | 1B |
| 4.1-3 | 1B | | 4.4-10 | 1B |
| 4.1-4 | 1B | | 4.4-11 | 1B |
| 4.1-5 | 1B | | 4.4-12 | 1B |
| 4.2-1 | 1B | | 4.4-13 | 1B |
| 4.2-2 | 1B | | 4.4-14 | 1B |
| 4.2-3 | 1B | | 4.4-15 | 1B |
| 4.2-4 | 1B | | 4.4-16 | 1B |
| 4.2-5 | 1B | | 4.4-17 | 1B |
| 4.2-6 | 1B | | 4.4-18 | 1B |
| 4.2-7 | 1B | | 4.4-19 | 1B |
| 4.2-8 | 1B | | 4.4-20 | 1B |
| 4.2-9 | 1B | | 4.4-21 | 1B |
| 4.2-10 | 1B | | 4.4-22 | 1B |
| 4.2-11 | 1B | | 4.4-23 | 1B |
| Fig. 4.2.1 | 0 | | 4.4-24 | 1B |
| Fig. 4.2.2 | 0 | | 4.4-25 | 1B |
| 4.3-1 | 1B | | 4.4-26 | 1B |
| 4.3-2 | 1B | | 4.4-27 | 1B |
| 4.3-3 | 1B | | 4.4-28 | 1B |
| 4.3-4 | 1B | | 4.4-29 | 1B |
| 4.3-5 | 1B | | 4.4-30 | 1B |
| 4.3-6 | 1B | | 4.4-31 | 1B |
| 4.3-7 | 1B | | 4.4-32 | 1B |
| 4.3-8 | 1B | | 4.4-33 | 1B |
| 4.3-9 | 1B | | 4.4-34 | 1B |
| 4.3-10 | 1B | | 4.4-35 | 1B |
| 4.3-11 | 1B | | 4.4-36 | 1B |
| 4.3-12 | 1B | | 4.4-37 | 1B |
| 4.3-13 | 1B | | 4.4-38 | 1B |
| 4.3-14 | 1B | | 4.4-39 | 1B |
| 4.3-15 | 1B | | 4.4-40 | 1B |
| 4.3-16 | 1B | | 4.4-41 | 1B |
| 4.3-17 | 1B | | 4.4-42 | 1B |
| 4.3-18 | 1B | | 4.4-43 | 1B |
| 4.3-19 | 1B | | 4.4-44 | 1B |
| 4.3-20 | 1B | | 4.4-45 | 1B |
| 4.3-21 | 1B | | 4.4-46 | 1B |
| 4.3-22 | 1B | | 4.4-47 | 1B |
| 4.3-23 | 1B | | 4.4-48 | 1B |
| Fig. 4.3.1 | 0 | | 4.4-49 | 1B |
| Fig. 4.3.2 | 0 | | 4.4-50 | 1B |
| Fig. 4.3.3 | 0 | | 4.4-51 | 1B |
| Fig. 4.3.4 | 0 | | 4.4-52 | 1B |
| 4.4-1 | 1B | | 4.4-53 | 1B |
| 4.4-2 | 1B | | 4.4-54 | 1B |
| 4.4-3 | 1B | | 4.4-55 | 1B |
| 4.4-4 | 1B | | 4.4-56 | 1B |

# LIST OF EFFECTIVE PAGES FOR PROPOSED FSAR REVISION 1

| Page | Revision | | Page | Revision |
|---|---|---|---|---|
| 4.4-57 | 1B | | 4.5-13 | 1B |
| 4.4-58 | 1B | | 4.5-14 | 1B |
| 4.4-59 | 1B | | 4.5-15 | 1B |
| 4.4-60 | 1B | | 4.5-16 | 1B |
| 4.4-61 | 1B | | 4.5-17 | 1B |
| 4.4-62 | 1B | | 4.5-18 | 1B |
| 4.4-63 | 1B | | 4.5-19 | 1B |
| 4.4-64 | 1B | | 4.5-20 | 1B |
| 4.4-65 | 1B | | 4.5-21 | 1B |
| 4.4-66 | 1B | | 4.5-22 | 1B |
| 4.4-67 | 1B | | 4.5-23 | 1B |
| 4.4-68 | 1B | | 4.5-24 | 1B |
| 4.4-69 | 1B | | 4.5-25 | 1B |
| 4.4-70 | 1B | | Fig. 4.5.1 | 0 |
| Fig. 4.4.1 | 0 | | Fig. 4.5.2 | 1 |
| Fig. 4.4.2 | 0 | | Fig. 4.5.3 | 1B |
| Fig. 4.4.3 | 0 | | 4.6-1 | 1 |
| Fig. 4.4.4 | 0 | | 4.6-2 | 1 |
| Fig. 4.4.5 | 0 | | 4.7-1 | 1 |
| Fig. 4.4.6 | 0 | | 4.7-2 | 1 |
| Fig. 4.4.7 | 0 | | 4.7-3 | 1 |
| Fig. 4.4.8 | 0 | | 4.A-1 | 1B |
| Fig. 4.4.9 | 0 | | 4.A-2 | 1B |
| Fig. 4.4.10 | 0 | | 4.A-3 | 1B |
| Fig. 4.4.11 | 0 | | 4.A-4 | 1B |
| Fig. 4.4.12 | 0 | | 4.A-5 | 1B |
| Fig. 4.4.13 | 0 | | 4.A-6 | 1B |
| Fig. 4.4.14 | Deleted in Rev. 1 | | 4.A-7 | 1B |
| Fig. 4.4.15 | 0 | | 4.A-8 | 1B |
| Fig. 4.4.16 | 1 | | 4.A-9 | 1B |
| Fig. 4.4.17 | 1 | | 4.A-10 | 1B |
| Fig. 4.4.18 | 0 | | 4.A-11 | 1B |
| Fig. 4.4.19 | 1 | | 4.A-12 | 1B |
| Fig. 4.4.20 | 1 | | 4.A-13 | 1B |
| Fig. 4.4.21 | 0 | | 4.A-14 | 1B |
| Fig. 4.4.22 | Deleted in Rev. 1 | | 4.A-15 | 1B |
| Fig. 4.4.23 | Deleted in Rev. 1 | | 4.A-16 | 1B |
| Fig. 4.4.24 | 0 | | 4.A-17 | 1B |
| Fig. 4.4.25 | 1 | | 4.A-18 | 1B |
| Fig. 4.4.26 | 1 | | 4.A-19 | 1B |
| 4.5-1 | 1B | | 4.A-20 | 1B |
| 4.5-2 | 1B | | 4.A-21 | 1B |
| 4.5-3 | 1B | | 4.A-22 | 1B |
| 4.5-4 | 1B | | 4.A-23 | 1B |
| 4.5-5 | 1B | | 4.A-24 | 1B |
| 4.5-6 | 1B | | Fig. 4.A.1 | 1A |
| 4.5-7 | 1B | | Fig. 4.A.2 | 1B |
| 4.5-8 | 1B | | Fig. 4.A.3 | 1B |
| 4.5-9 | 1B | | Fig. 4.A.4 | 1B |
| 4.5-10 | 1B | | Fig. 4.A.5 | 1B |
| 4.5-11 | 1B | | Fig. 4.A.6 | 1B |
| 4.5-12 | 1B | | | |

# LIST OF EFFECTIVE PAGES FOR PROPOSED FSAR REVISION 1

| Page | Revision | | Page | Revision |
|---|---|---|---|---|
| Fig. 4.A.7 | 1B | | | |
| Fig. 4.A.8 | 1B | | | |
| Fig. 4.A.9 | 1B | | | |
| Fig. 4.A.10 | 1B | | | |
| Fig. 4.A.11 | 1B | | | |
| Fig. 4.A.12 | 1B | | | |
| Fig. 4.A.13 | 1B | | | |
| 4.B-1 | 1B | | | |
| 4.B-2 | 1B | | | |
| 4.B-3 | 1B | | | |
| 4.B-4 | 1B | | | |
| 4.B-5 | 1B | | | |
| 4.B-6 | 1B | | | |
| 4.B-7 | 1B | | | |
| 4.B-8 | 1B | | | |
| 4.B-9 | 1B | | | |
| 4.B-10 | 1B | | | |
| Fig. 4.B.1 | 1A | | | |
| Fig. 4.B.2 | 1A | | | |
| Fig. 4.B.3 | 1A | | | |
| Fig. 4.B.4 | 1A | | | |
| Fig. 4.B.5 | 1A | | | |
| Fig. 4.B.6 | 1A | | | |
| Fig. 4.B.7 | 1A | | | |
| Fig. 4.B.8 | 1A | | | |

# LIST OF EFFECTIVE PAGES FOR PROPOSED FSAR REVISION 1

| Page | Revision | | Page | Revision |
|---|---|---|---|---|
| 5.0-1 | 1 | | 5.2-18 | 1B |
| 5.0-2 | 1 | | 5.2-19 | 1B |
| 5.0-3 | 1 | | 5.2-20 | 1B |
| 5.1-1 | 1B | | 5.2-21 | 1B |
| 5.1-2 | 1B | | 5.2-22 | 1B |
| 5.1-3 | 1B | | 5.2-23 | 1B |
| 5.1-4 | 1B | | 5.2-24 | 1B |
| 5.1-5 | 1B | | 5.2-25 | 1B |
| 5.1-6 | 1B | | 5.2-26 | 1B |
| 5.1-7 | 1B | | 5.2-27 | 1B |
| 5.1-8 | 1B | | 5.2-28 | 1B |
| 5.1-9 | 1B | | 5.2-29 | 1B |
| 5.1-10 | 1B | | 5.2-30 | 1B |
| 5.1-11 | 1B | | 5.2-31 | 1B |
| 5.1-12 | 1B | | 5.2-32 | 1B |
| 5.1-13 | 1B | | 5.2-33 | 1B |
| 5.1-14 | 1B | | 5.2-34 | 1B |
| 5.1-15 | 1B | | 5.2-35 | 1B |
| 5.1-16 | 1B | | 5.2-36 | 1B |
| 5.1-17 | 1B | | 5.2-37 | 1B |
| 5.1-18 | 1B | | 5.2-38 | 1B |
| 5.1-19 | 1B | | 5.2-39 | 1B |
| 5.1-20 | 1B | | 5.2-40 | 1B |
| Fig. 5.1.1 | 1 | | 5.2-41 | 1B |
| Fig. 5.1.2 | 0 | | 5.2-42 | 1B |
| Fig. 5.1.3 | 1 | | 5.2-43 | 1B |
| Fig. 5.1.4 | 0 | | 5.2-44 | 1B |
| Fig. 5.1.5 | 0 | | 5.2-45 | 1B |
| Fig. 5.1.6 | 0 | | 5.2-46 | 1B |
| Fig. 5.1.7 | 0 | | 5.2-47 | 1B |
| Fig. 5.1.8 | 0 | | 5.2-48 | 1B |
| Fig. 5.1.9 | 0 | | 5.2-49 | 1B |
| Fig. 5.1.10 | 0 | | 5.2-50 | 1B |
| Fig. 5.1.11 | 0 | | 5.2-51 | 1B |
| Fig. 5.1.12 | 1B | | 5.2-52 | 1B |
| 5.2-1 | 1B | | 5.2-53 | 1B |
| 5.2-2 | 1B | | 5.2-54 | 1B |
| 5.2-3 | 1B | | 5.3-1 | 1B |
| 5.2-4 | 1B | | 5.3-2 | 1B |
| 5.2-5 | 1B | | 5.3-3 | 1B |
| 5.2-6 | 1B | | 5.3-4 | 1B |
| 5.2-7 | 1B | | 5.3-5 | 1B |
| 5.2-8 | 1B | | 5.3-6 | 1B |
| 5.2-9 | 1B | | 5.3-7 | 1B |
| 5.2-10 | 1B | | 5.3-8 | 1B |
| 5.2-11 | 1B | | 5.3-9 | 1B |
| 5.2-12 | 1B | | 5.3-10 | 1B |
| 5.2-13 | 1B | | 5.3-11 | 1B |
| 5.2-14 | 1B | | 5.3-12 | 1B |
| 5.2-15 | 1B | | Fig. 5.3.1 | 1 |
| 5.2-16 | 1B | | Fig. 5.3.2 | 0 |
| 5.2-17 | 1B | | Fig. 5.3.3 | 0 |

# LIST OF EFFECTIVE PAGES FOR PROPOSED FSAR REVISION 1

| Page | Revision | | Page | Revision |
|---|---|---|---|---|
| Fig. 5.3.4 | 1 | | 5.6-2 | 1B |
| Fig. 5.3.5 | 0 | | 5.6-3 | 1B |
| Fig. 5.3.6 | 0 | | 5.A-1 | 0 |
| Fig. 5.3.7 | 0 | | 5.A-2 | 0 |
| Fig. 5.3.8 | 0 | | 5.A-3 | 0 |
| Fig. 5.3.9 | 0 | | 5.B-1 | 0 |
| Fig. 5.3.10 | 1B | | 5.B-2 | 0 |
| Fig. 5.3.11 | 0 | | 5.B-3 | 0 |
| Fig. 5.3.12 | 0 | | 5.B-4 | 0 |
| Fig. 5.3.13 | 0 | | 5.B-5 | 0 |
| Fig. 5.3.14 | 0 | | 5.B-6 | 0 |
| Fig. 5.3.15 | 0 | | 5.B-7 | 0 |
| Fig. 5.3.16 | 0 | | 5.C-1 | 0 |
| Fig. 5.3.17 | 0 | | 5.C-2 | 0 |
| Fig. 5.3.18 | 1B | | 5.C-3 | 0 |
| Fig. 5.3.19 | 1B | | 5.C-4 | 0 |
| 5.4-1 | 1 | | 5.C-5 | 0 |
| 5.4-2 | 1 | | 5.C-6 | 0 |
| 5.4-3 | 1 | | 5.C-7 | 0 |
| 5.4-4 | 1 | | 5.C-8 | 0 |
| 5.4-5 | 1 | | 5.C-9 | 0 |
| 5.4-6 | 1 | | 5.C-10 | 0 |
| 5.4-7 | 1 | | 5.C-11 | 0 |
| 5.4-8 | 1 | | 5.C-12 | 0 |
| 5.4-9 | 1 | | 5.C-13 | 0 |
| 5.4-10 | 1 | | 5.C-14 | 0 |
| 5.4-11 | 1 | | 5.C-15 | 0 |
| 5.4-12 | 1 | | 5.C-16 | 0 |
| 5.4-13 | 1 | | 5.C-17 | 0 |
| 5.4-14 | 1 | | 5.C-18 | 0 |
| 5.4-15 | 1 | | 5.C-19 | 0 |
| 5.4-16 | 1 | | 5.C-20 | 0 |
| 5.4-17 | 1 | | 5.C-21 | 0 |
| 5.4-18 | 1 | | 5.C-22 | 0 |
| 5.4-19 | 1 | | 5.C-23 | 0 |
| 5.4-20 | 1 | | 5.C-24 | 0 |
| 5.4-21 | 1 | | 5.C-25 | 0 |
| 5.4-22 | 1 | | 5.C-26 | 0 |
| 5.4-23 | 1 | | 5.C-27 | 0 |
| 5.4-24 | 1 | | 5.C-28 | 0 |
| 5.4-25 | 1 | | 5.C-29 | 0 |
| 5.4-26 | 1 | | 5.C-30 | 0 |
| 5.4-27 | 1 | | 5.C-31 | 0 |
| 5.4-28 | 1 | | 5.C-32 | 0 |
| 5.4-29 | 1 | | 5.C-33 | 0 |
| 5.4-30 | 1 | | 5.C-34 | 0 |
| 5.4-31 | 1 | | 5.C-35 | 0 |
| 5.4-32 | 1 | | 5.C-36 | 0 |
| 5.4-33 | 1 | | 5.C-37 | 0 |
| 5.4-34 | 1 | | 5.C-38 | 0 |
| 5.5-1 | 0 | | 5.C-39 | 0 |
| 5.6-1 | 1B | | 5.C-40 | 0 |

# LIST OF EFFECTIVE PAGES FOR PROPOSED FSAR REVISION 1

| Page | Revision | | Page | Revision |
|---|---|---|---|---|
| 5.C-41 | 0 | | | |
| 5.C-42 | 0 | | | |
| 5.C-43 | 0 | | | |
| 5.C-44 | 0 | | | |
| 5.C-45 | 0 | | | |
| 5.C-46 | 0 | | | |
| 5.C-47 | 0 | | | |
| 5.C-48 | 0 | | | |
| 5.C-49 | 0 | | | |
| 5.C-50 | 0 | | | |
| 5.C-51 | 0 | | | |
| 5.C-52 | 0 | | | |
| 5.C-53 | 0 | | | |
| 5.C-54 | 0 | | | |
| 5.C-55 | 0 | | | |
| 5.C-56 | 0 | | | |
| 5.C-57 | 0 | | | |
| 5.C-58 | 0 | | | |
| 5.C-59 | 0 | | | |
| 5.C-60 | 0 | | | |
| 5.C-61 | 0 | | | |
| 5.D-1 | 0 | | | |
| 5.D-2 | 0 | | | |
| 5.D-3 | 0 | | | |
| 5.D-4 | 0 | | | |
| 5.D-5 | 0 | | | |
| 5.D-6 | 0 | | | |

# LIST OF EFFECTIVE PAGES FOR PROPOSED FSAR REVISION 1

| Page | Revision | | Page | Revision |
|---|---|---|---|---|
| 6.1-1 | 1B | | 6.2-35 | 1 |
| 6.1-2 | 1B | | 6.2-36 | 1 |
| 6.1-3 | 1B | | 6.2-37 | 1 |
| 6.1-4 | 1B | | 6.2-38 | 1 |
| 6.1-5 | 1B | | 6.2-39 | 1 |
| 6.1-6 | 1B | | 6.2-40 | 1 |
| 6.1-7 | 1B | | 6.2-41 | 1 |
| 6.1-8 | 1B | | 6.2-42 | 1 |
| 6.1-9 | 1B | | 6.2-43 | 1 |
| 6.1-10 | 1B | | 6.2-44 | 1 |
| 6.1-11 | 1B | | 6.2-45 | 1 |
| 6.1-12 | 1B | | 6.2-46 | 1 |
| 6.1-13 | 1B | | 6.2-47 | 1 |
| 6.1-14 | 1B | | 6.2-48 | 1 |
| 6.1-15 | 1B | | 6.2-49 | 1 |
| 6.1-16 | 1B | | 6.2-50 | 1 |
| 6.1-17 | 1B | | 6.2-51 | 1 |
| 6.1-18 | 1B | | 6.2-52 | 1 |
| 6.2-1 | 1 | | 6.2-53 | 1 |
| 6.2-2 | 1 | | 6.2-54 | 1 |
| 6.2-3 | 1 | | 6.2-55 | 1 |
| 6.2-4 | 1 | | 6.2-56 | 1 |
| 6.2-5 | 1 | | 6.2-57 | 1 |
| 6.2-6 | 1 | | 6.2-58 | 1 |
| 6.2-7 | 1 | | 6.2-59 | 1 |
| 6.2-8 | 1 | | 6.2-60 | 1 |
| 6.2-9 | 1 | | 6.2-61 | 1 |
| 6.2-10 | 1 | | 6.2-62 | 1 |
| 6.2-11 | 1 | | 6.2-63 | 1 |
| 6.2-12 | 1 | | Fig. 6.2.1 | 0 |
| 6.2-13 | 1 | | 6.3-1 | 1B |
| 6.2-14 | 1 | | 6.3-2 | 1B |
| 6.2-15 | 1 | | 6.3-3 | 1B |
| 6.2-16 | 1 | | 6.3-4 | 1B |
| 6.2-17 | 1 | | 6.3-5 | 1B |
| 6.2-18 | 1 | | 6.3-6 | 1B |
| 6.2-19 | 1 | | 6.3-7 | 1B |
| 6.2-20 | 1 | | 6.3-8 | 1B |
| 6.2-21 | 1 | | 6.3-9 | 1B |
| 6.2-22 | 1 | | 6.3-10 | 1B |
| 6.2-23 | 1 | | 6.3-11 | 1B |
| 6.2-24 | 1 | | 6.3-12 | 1B |
| 6.2-25 | 1 | | 6.3-13 | 1B |
| 6.2-26 | 1 | | 6.3-14 | 1B |
| 6.2-27 | 1 | | 6.3-15 | 1B |
| 6.2-28 | 1 | | Fig. 6.3.1 | 0 |
| 6.2-29 | 1 | | Fig. 6.3.1A | 1B |
| 6.2-30 | 1 | | Fig. 6.3.2 | 1B |
| 6.2-31 | 1 | | Fig. 6.3.3 | 0 |
| 6.2-32 | 1 | | Fig. 6.3.4 | 0 |
| 6.2-33 | 1 | | Fig. 6.3.4A | 1B |
| 6.2-34 | 1 | | Fig. 6.3.5 | 1B |

# LIST OF EFFECTIVE PAGES FOR PROPOSED FSAR REVISION 1

| Page | Revision | | Page | Revision |
|---|---|---|---|---|
| Fig. 6.3.6 | 0 | | 6.A-7 | 1 |
| Fig. 6.3.7 | 1 | | 6.A-8 | 1 |
| 6.4-1 | 1B | | 6.A-9 | 1 |
| 6.4-2 | 1B | | 6.A-10 | 1 |
| 6.4-3 | 1B | | 6.A-11 | 1 |
| 6.4-4 | 1B | | 6.A-12 | 1 |
| 6.4-5 | 1B | | 6.A-13 | 1 |
| 6.4-6 | 1B | | 6.A-14 | 1 |
| 6.4-7 | 1B | | 6.A-15 | 1 |
| 6.4-8 | 1B | | 6.A-16 | 1 |
| 6.4-9 | 1B | | 6.A-17 | 1 |
| 6.4-10 | 1B | | 6.A-18 | 1 |
| 6.4-11 | 1B | | 6.A-19 | 1 |
| 6.4-12 | 1B | | 6.A-20 | 1 |
| 6.4-13 | 1B | | Fig. 6.A.1 | 0 |
| 6.4-14 | 1B | | Fig. 6.A.2 | 0 |
| 6.4-15 | 1B | | Fig. 6.A.3 | 0 |
| 6.4-16 | 1B | | Fig. 6.A.4 | 0 |
| 6.4-17 | 1B | | Fig. 6.A.5 | 0 |
| 6.4-18 | 1B | | Fig. 6.A.6 | 0 |
| 6.4-19 | 1B | | 6.B-1 | 0 |
| 6.4-20 | 1B | | 6.B-2 | 0 |
| 6.4-21 | 1B | | 6.C-1 | 1 |
| 6.4-22 | 1B | | 6.C-2 | 1 |
| 6.4-23 | 1B | | 6.C-3 | 1 |
| 6.4-24 | 1B | | 6.C-4 | 1 |
| 6.4-25 | 1B | | 6.C-5 | 1 |
| Fig. 6.4.1 | 0 | | 6.C-6 | 1 |
| Fig. 6.4.2 | 1 | | 6.C-7 | 1 |
| Fig. 6.4.3 | 1 | | 6.C-8 | 1 |
| Fig. 6.4.4 | 1 | | 6.C-9 | 1 |
| Fig. 6.4.5 | 1 | | 6.C-10 | 1 |
| Fig. 6.4.6 | 1 | | 6.C-11 | 1 |
| Fig. 6.4.7 | 1 | | 6.C-12 | 1 |
| Fig. 6.4.8 | 1 | | 6.C-13 | 1 |
| Fig. 6.4.9 | 1 | | 6.C-14 | 1 |
| Fig. 6.4.10 | 0 | | 6.C-15 | 1 |
| Fig. 6.4.11 | 1 | | 6.C-16 | 1 |
| Fig. 6.4.12 | 1 | | 6.C-17 | 1 |
| Fig. 6.4.13 | 1 | | 6.D-1 | 0 |
| Fig. 6.4.14 | 1 | | 6.D-2 | 0 |
| Fig. 6.4.15 | 1 | | 6.D-3 | 0 |
| 6.5-1 | 0 | | 6.D-4 | 0 |
| 6.6-1 | 0 | | 6.D-5 | 0 |
| 6.7-1 | 0 | | 6.D-6 | 0 |
| 6.7-2 | 0 | | 6.D-7 | 0 |
| 6.A-1 | 1 | | 6.D-8 | 0 |
| 6.A-2 | 1 | | 6.D-9 | 0 |
| 6.A-3 | 1 | | 6.D-10 | 0 |
| 6.A-4 | 1 | | 6.D-11 | 0 |
| 6.A-5 | 1 | | 6.D-12 | 0 |
| 6.A-6 | 1 | | 6.D-13 | 0 |

# LIST OF EFFECTIVE PAGES FOR PROPOSED FSAR REVISION 1

| Page | Revision | | Page | Revision |
|---|---|---|---|---|
| 6.D-14 | 0 | | | |
| 6.D-15 | 0 | | | |
| 6.D-16 | 0 | | | |
| 6.D-17 | 0 | | | |
| 6.D-18 | 0 | | | |
| 6.D-19 | 0 | | | |
| 6.D-20 | 0 | | | |
| 6.D-21 | 0 | | | |
| 6.D-22 | 0 | | | |
| 6.D-23 | 0 | | | |
| 6.D-24 | 0 | | | |
| 6.D-25 | 0 | | | |
| 6.D-26 | 0 | | | |
| 6.D-27 | 0 | | | |
| 6.D-28 | 0 | | | |
| 6.D-29 | 0 | | | |
| 6.D-30 | 0 | | | |
| 6.D-31 | 0 | | | |
| 6.D-32 | 0 | | | |
| 6.D-33 | 0 | | | |

# LIST OF EFFECTIVE PAGES FOR PROPOSED FSAR REVISION 1

| Page | Revision | | Page | Revision |
|---|---|---|---|---|
| 7.0-1 | 0 | | 7.A-14 | 1B |
| 7.1-1 | 1A | | 7.A-15 | 1B |
| 7.1-2 | 1A | | 7.A-16 | 1B |
| 7.1-3 | 1A | | 7.A-17 | 1B |
| 7.1-4 | 1A | | 7.A-18 | 1B |
| 7.1-5 | 1A | | 7.A-19 | 1B |
| 7.1-6 | 1A | | 7.A-20 | 1B |
| 7.1-7 | 1A | | 7.A-21 | 1B |
| Fig. 7.1.1 | 0 | | 7.A-22 | 1B |
| 7.2-1 | 1B | | 7.A-23 | 1B |
| 7.2-2 | 1B | | 7.A-24 | 1B |
| 7.2-3 | 1B | | 7.A-25 | 1B |
| 7.2-4 | 1B | | 7.A-26 | 1B |
| 7.2-5 | 1B | | 7.A-27 | 1B |
| 7.2-6 | 1B | | 7.A-28 | 1B |
| 7.2-7 | 1B | | 7.A-29 | 1B |
| 7.2-8 | 1B | | 7.A-30 | 1B |
| 7.2-9 | 1B | | 7.A-31 | 1B |
| 7.3-1 | 1B | | 7.A-32 | 1B |
| 7.3-2 | 1B | | 7.A-33 | 1B |
| 7.3-3 | 1B | | 7.A-34 | 1B |
| 7.3-4 | 1B | | 7.A-35 | 1B |
| 7.3-5 | 1B | | 7.A-36 | 1B |
| 7.3-6 | 1B | | 7.A-37 | 1B |
| 7.3-7 | 1B | | 7.A-38 | 1B |
| 7.3-8 | 1B | | 7.A-39 | 1B |
| 7.3-9 | 1B | | 7.A-40 | 1B |
| 7.3-10 | 1B | | 7.A-41 | 1B |
| 7.3-11 | 1B | | 7.A-42 | 1B |
| 7.3-12 | 1B | | 7.A-43 | 1B |
| 7.3-13 | 1B | | 7.A-44 | 1B |
| 7.3-14 | 1B | | 7.A-45 | 1B |
| 7.3-15 | 1B | | 7.A-46 | 1B |
| 7.3-16 | 1B | | 7.A-47 | 1B |
| 7.3-17 | 1B | | 7.A-48 | 1B |
| 7.3-18 | 1B | | 7.A-49 | 1B |
| 7.3-19 | 1B | | 7.A-50 | 1B |
| 7.4-1 | 1 | | 7.A-51 | 1B |
| 7.4-2 | 1 | | 7.A-52 | 1B |
| 7.A-1 | 1B | | 7.A-53 | 1B |
| 7.A-2 | 1B | | 7.A-54 | 1B |
| 7.A-3 | 1B | | 7.A-55 | 1B |
| 7.A-4 | 1B | | 7.A-56 | 1B |
| 7.A-5 | 1B | | 7.A-57 | 1B |
| 7.A-6 | 1B | | 7.A-58 | 1B |
| 7.A-7 | 1B | | 7.A-59 | 1B |
| 7.A-8 | 1B | | 7.A-60 | 1B |
| 7.A-9 | 1B | | 7.A-61 | 1B |
| 7.A-10 | 1B | | 7.A-62 | 1B |
| 7.A-11 | 1B | | 7.A-63 | 1B |
| 7.A-12 | 1B | | 7.A-64 | 1B |
| 7.A-13 | 1B | | 7.A-65 | 1B |

# LIST OF EFFECTIVE PAGES FOR PROPOSED FSAR REVISION 1

| Page | Revision | | Page | Revision |
|---|---|---|---|---|
| 7.A-66 | 1B | | | |
| 7.A-67 | 1B | | | |
| 7.A-68 | 1B | | | |
| 7.A-69 | 1B | | | |
| 7.A-70 | 1B | | | |
| 7.A-71 | 1B | | | |
| 7.A-72 | 1B | | | |
| 7.A-73 | 1B | | | |
| 7.A-74 | 1B | | | |
| 7.A-75 | 1B | | | |
| 7.A-76 | 1B | | | |
| 7.A-77 | 1B | | | |
| 7.A-78 | 1B | | | |
| 7.A-79 | 1B | | | |
| 7.A-80 | 1B | | | |
| 7.A-81 | 1B | | | |
| 7.A-82 | 1B | | | |
| 7.A-83 | 1B | | | |
| 7.A-84 | 1B | | | |
| 7.A-85 | 1B | | | |
| 7.A-86 | 1B | | | |
| 7.A-87 | 1B | | | |
| 7.A-88 | 1B | | | |
| 7.A-89 | 1B | | | |
| 7.A-90 | 1B | | | |
| 7.A-91 | 1B | | | |

# LIST OF EFFECTIVE PAGES FOR PROPOSED FSAR REVISION 1

| Page | Revision | | Page | Revision |
|---|---|---|---|---|
| 8.0-1 | 1 | | Fig. 8.1.1 | 1A |
| 8.0-2 | 1 | | Fig. 8.1.2a | 0 |
| 8.0-3 | 1 | | Fig. 8.1.2b | 0 |
| 8.0-4 | 1 | | Fig. 8.1.2c | 0 |
| 8.0-5 | 1 | | Fig. 8.1.2d | 0 |
| 8.0-6 | 1 | | Fig. 8.1.2e | 0 |
| 8.1-1 | 1B | | Fig. 8.1.2f | 0 |
| 8.1-2 | 1B | | Fig. 8.1.3 | 0 |
| 8.1-3 | 1B | | Fig. 8.1.4 | 0 |
| 8.1-4 | 1B | | Fig. 8.1.5 | 0 |
| 8.1-5 | 1B | | Fig. 8.1.6 | 0 |
| 8.1-6 | 1B | | Fig. 8.1.7 | 0 |
| 8.1-7 | 1B | | Fig. 8.1.8 | 0 |
| 8.1-8 | 1B | | Fig. 8.1.9 | 0 |
| 8.1-9 | 1B | | Fig. 8.1.10 | 0 |
| 8.1-10 | 1B | | Fig. 8.1.11 | 0 |
| 8.1-11 | 1B | | Fig. 8.1.12 | 0 |
| 8.1-12 | 1B | | Fig. 8.1.13 | 0 |
| 8.1-13 | 1B | | Fig. 8.1.14 | 0 |
| 8.1-14 | 1B | | Fig. 8.1.15 | 0 |
| 8.1-15 | 1B | | Fig. 8.1.16 | 0 |
| 8.1-16 | 1B | | Fig. 8.1.17 | 0 |
| 8.1-17 | 1B | | Fig. 8.1.18 | 0 |
| 8.1-18 | 1B | | Fig. 8.1.19 | 0 |
| 8.1-19 | 1B | | Fig. 8.1.20 | 0 |
| 8.1-20 | 1B | | Fig. 8.1.21 | 0 |
| 8.1-21 | 1B | | Fig. 8.1.22a | 1A |
| 8.1-22 | 1B | | Fig. 8.1.22b | 1A |
| 8.1-23 | 1B | | Fig. 8.1.23 | 0 |
| 8.1-24 | 1B | | Fig. 8.1.24 | 0 |
| 8.1-25 | 1B | | Fig. 8.1.25 | 0 |
| 8.1-26 | 1B | | Fig. 8.1.26 | 0 |
| 8.1-27 | 1B | | Fig. 8.1.27 | 0 |
| 8.1-28 | 1B | | Fig. 8.1.28 | 0 |
| 8.1-29 | 1B | | Fig. 8.1.29a | 0 |
| 8.1-30 | 1B | | Fig. 8.1.29b | 0 |
| 8.1-31 | 1B | | Fig. 8.1.30 | 0 |
| 8.1-32 | 1B | | Fig. 8.1.31 | 0 |
| 8.1-33 | 1B | | Fig. 8.1.32 | 0 |
| 8.1-34 | 1B | | Fig. 8.1.33 | 0 |
| 8.1-35 | 1B | | Fig. 8.1.34a | 0 |
| 8.1-36 | 1B | | Fig. 8.1.34b | 0 |
| 8.1-37 | 1B | | Fig. 8.1.35 | 0 |
| 8.1-38 | 1B | | Fig. 8.1.36 | 0 |
| 8.1-39 | 1B | | Fig. 8.1.37 | 0 |
| 8.1-40 | 1B | | 8.2-1 | 1 |
| 8.1-41 | 1B | | 8.3-1 | 1B |
| 8.1-42 | 1B | | 8.3-2 | 1B |
| 8.1-43 | 1B | | 8.3-3 | 1B |
| 8.1-44 | 1B | | 8.3-4 | 1B |
| 8.1-45 | 1B | | 8.3-5 | 1B |
| 8.1-46 | 1B | | 8.3-6 | 1B |

# LIST OF EFFECTIVE PAGES FOR PROPOSED FSAR REVISION 1

| Page | Revision | | Page | Revision |
|---|---|---|---|---|
| 8.3-7 | 1B | | | |
| 8.3-8 | 1B | | | |
| 8.3-9 | 1B | | | |
| 8.3-10 | 1B | | | |
| 8.3-11 | 1B | | | |
| Fig. 8.3.1 | 0 | | | |
| Fig. 8.3.2a | 0 | | | |
| Fig. 8.3.2b | 0 | | | |
| Fig. 8.3.2c | 0 | | | |
| Fig. 8.3.2d | 0 | | | |
| Fig. 8.3.3 | 0 | | | |
| Fig. 8.3.4 | 0 | | | |
| 8.4-1 | 1 | | | |
| 8.4-2 | 1 | | | |
| 8.5-1 | 1 | | | |
| 8.5-2 | 1 | | | |
| 8.5-3 | 1 | | | |
| 8.5-4 | 1 | | | |
| 8.6-1 | 0 | | | |

# LIST OF EFFECTIVE PAGES FOR PROPOSED FSAR REVISION 1

| Page | Revision | | Page | Revision |
|---|---|---|---|---|
| 9.0-1 | 0 | | | |
| 9.1-1 | 1B | | | |
| 9.1-2 | 1B | | | |
| 9.1-3 | 1B | | | |
| 9.1-4 | 1B | | | |
| 9.1-5 | 1B | | | |
| 9.1-6 | 1B | | | |
| 9.1-7 | 1B | | | |
| 9.1-8 | 1B | | | |
| 9.1-9 | 1B | | | |
| 9.1-10 | 1B | | | |
| 9.1-11 | 1B | | | |
| 9.1-12 | 1B | | | |
| 9.1-13 | 1B | | | |
| 9.1-14 | 1B | | | |
| 9.1-15 | 1B | | | |
| 9.1-16 | 1B | | | |
| 9.1-17 | 1B | | | |
| 9.1-18 | 1B | | | |
| 9.1-19 | 1B | | | |
| 9.1-20 | 1B | | | |
| 9.1-21 | 1B | | | |
| 9.1-22 | 1B | | | |
| 9.1-23 | 1B | | | |
| 9.1-24 | 1B | | | |
| 9.1-25 | 1B | | | |
| 9.1-26 | 1B | | | |
| 9.1-27 | 1B | | | |
| 9.2-1 | 0 | | | |
| 9.2-2 | 0 | | | |
| 9.2-3 | 0 | | | |
| 9.2-4 | 0 | | | |
| 9.3-1 | 0 | | | |
| 9.4-1 | 0 | | | |

# LIST OF EFFECTIVE PAGES FOR PROPOSED FSAR REVISION 1

| Page | Revision | | Page | Revision |
|---|---|---|---|---|
| 10.1-1 | 1B | | 10.4-4 | 1 |
| 10.1-2 | 1B | | 10.4-5 | 1 |
| 10.1-3 | 1B | | 10.5-1 | 0 |
| 10.1-4 | 1B | | | |
| 10.1-5 | 1B | | | |
| 10.1-6 | 1B | | | |
| 10.1-7 | 1B | | | |
| 10.1-8 | 1B | | | |
| Fig. 10.1.1 | 0 | | | |
| 10.2-1 | 1 | | | |
| 10.3-1 | 1B | | | |
| 10.3-2 | 1B | | | |
| 10.3-3 | 1B | | | |
| 10.3-4 | 1B | | | |
| 10.3-5 | 1B | | | |
| 10.3-6 | 1B | | | |
| 10.3-7 | 1B | | | |
| 10.3-8 | 1B | | | |
| 10.3-9 | 1B | | | |
| 10.3-10 | 1B | | | |
| 10.3-11 | 1B | | | |
| 10.3-12 | 1B | | | |
| 10.3-13 | 1B | | | |
| 10.3-14 | 1B | | | |
| 10.3-15 | 1B | | | |
| 10.3-16 | 1B | | | |
| 10.3-17 | 1B | | | |
| 10.3-18 | 1B | | | |
| 10.3-19 | 1B | | | |
| 10.3-20 | 1B | | | |
| 10.3-21 | 1B | | | |
| 10.3-22 | 1B | | | |
| 10.3-23 | 1B | | | |
| 10.3-24 | 1B | | | |
| 10.3-25 | 1B | | | |
| 10.3-26 | 1B | | | |
| 10.3-27 | 1B | | | |
| 10.3-28 | 1B | | | |
| 10.3-29 | 1B | | | |
| 10.3-30 | 1B | | | |
| 10.3-31 | 1B | | | |
| 10.3-32 | 1B | | | |
| Fig. 10.3.1a | 0 | | | |
| Fig. 10.3.1b | 0 | | | |
| Fig. 10.3.1c | 0 | | | |
| Fig. 10.3.1d | 0 | | | |
| Fig. 10.3.1e | 0 | | | |
| 10.4-1 | 1 | | | |
| 10.4-2 | 1 | | | |
| 10.4-3 | 1 | | | |
| | | | | |
| | | | | |

# LIST OF EFFECTIVE PAGES FOR PROPOSED FSAR REVISION 1

| Page | Revision | | Page | Revision |
|---|---|---|---|---|
| 11.1-1 | 1 | | 11.2-37 | 1B |
| 11.1-2 | 1 | | 11.2-38 | 1B |
| 11.1-3 | 1 | | 11.2-39 | 1B |
| 11.1-4 | 1 | | 11.2-40 | 1B |
| 11.1-5 | 1 | | 11.2-41 | 1B |
| 11.1-6 | 1 | | 11.2-42 | 1B |
| 11.1-7 | 1 | | 11.2-43 | 1B |
| 11.1-8 | 1 | | 11.2-44 | 1B |
| 11.1-9 | 1 | | 11.2-45 | 1B |
| 11.1-10 | 1 | | 11.2-46 | 1B |
| 11.1-11 | 1 | | 11.2-47 | 1B |
| 11.1-12 | 1 | | 11.2-48 | 1B |
| 11.1-13 | 1 | | 11.2-49 | 1B |
| 11.1-14 | 1 | | 11.2-50 | 1B |
| 11.1-15 | 1 | | Fig. 11.2.1 | 0 |
| 11.1-16 | 1 | | Fig. 11.2.2 | 0 |
| 11.2-1 | 1B | | Fig. 11.2.3 | 0 |
| 11.2-2 | 1B | | Fig. 11.2.4 | 0 |
| 11.2-3 | 1B | | Fig. 11.2.5 | 0 |
| 11.2-4 | 1B | | Fig. 11.2.6 | 1 |
| 11.2-5 | 1B | | Fig. 11.2.7 | 0 |
| 11.2-6 | 1B | | Fig. 11.2.8 | Deleted in Rev. 1 |
| 11.2-7 | 1B | | 11.3-1 | 0 |
| 11.2-8 | 1B | | | |
| 11.2-9 | 1B | | | |
| 11.2-10 | 1B | | | |
| 11.2-11 | 1B | | | |
| 11.2-12 | 1B | | | |
| 11.2-13 | 1B | | | |
| 11.2-14 | 1B | | | |
| 11.2-15 | 1B | | | |
| 11.2-16 | 1B | | | |
| 11.2-17 | 1B | | | |
| 11.2-18 | 1B | | | |
| 11.2-19 | 1B | | | |
| 11.2-20 | 1B | | | |
| 11.2-21 | 1B | | | |
| 11.2-22 | 1B | | | |
| 11.2-23 | 1B | | | |
| 11.2-24 | 1B | | | |
| 11.2-25 | 1B | | | |
| 11.2-26 | 1B | | | |
| 11.2-27 | 1B | | | |
| 11.2-28 | 1B | | | |
| 11.2-29 | 1B | | | |
| 11.2-30 | 1B | | | |
| 11.2-31 | 1B | | | |
| 11.2-32 | 1B | | | |
| 11.2-33 | 1B | | | |
| 11.2-34 | 1B | | | |
| 11.2-35 | 1B | | | |
| 11.2-36 | 1B | | | |

# LIST OF EFFECTIVE PAGES FOR PROPOSED FSAR REVISION 1

| Page | Revision | | Page | Revision |
|---|---|---|---|---|
| 12.0-1 | 0 | | B 3.3.1-1 | 1 |
| 12.1-1 | 1A | | B 3.3.1-2 | 1 |
| 12.1-2 | 1A | | B 3.3.1-3 | 1 |
| 12.1-3 | 1A | | B 3.3.1-4 | 1 |
| 12.2-1 | 1B | | B 3.3.1-5 | 1 |
| 12.2-2 | 1B | | Appendix 12.B Cover | 1 |
| 12.2-3 | 1B | | Comment Resolution Letters | 0 |
| 12.2-4 | 1B | | 21 Pages | |
| 12.2-5 | 1B | | | |
| 12.3-1 | 0 | | | |
| 12.4-1 | 0 | | | |
| 12.5-1 | 0 | | | |
| Appendix 12.A Cover | 1A | | | |
| TS Bases TOC | 1 | | | |
| B 3.0-1 | 0 | | | |
| B 3.0-2 | 0 | | | |
| B 3.0-3 | 0 | | | |
| B 3.0-4 | 0 | | | |
| B 3.0-5 | 0 | | | |
| B 3.0-6 | 0 | | | |
| B 3.0-7 | 0 | | | |
| B 3.0-8 | 0 | | | |
| B 3.0-9 | 0 | | | |
| B 3.1.1-1 | 1B | | | |
| B 3.1.1-2 | 1B | | | |
| B 3.1.1-3 | 1B | | | |
| B 3.1.1-4 | 1B | | | |
| B 3.1.1-5 | 1B | | | |
| B 3.1.1-6 | 1B | | | |
| B 3.1.1-7 | 1B | | | |
| B 3.1.2-1 | 1B | | | |
| B 3.1.2-2 | 1B | | | |
| B 3.1.2-3 | 1B | | | |
| B 3.1.2-4 | 1B | | | |
| B 3.1.2-5 | 1B | | | |
| B 3.1.2-6 | 1B | | | |
| B 3.1.2-7 | 1B | | | |
| B 3.1.3-1 | 1 | | | |
| B 3.1.3-2 | 1 | | | |
| B 3.1.3-3 | 1 | | | |
| B 3.1.3-4 | 1 | | | |
| B 3.1.3-5 | 1 | | | |
| B 3.2.1-1 | 1B | | | |
| B 3.2.1-2 | 1B | | | |
| B 3.2.1-3 | 1B | | | |
| B 3.2.2-1 | 1B | | | |
| B 3.2.2-2 | 1B | | | |
| B 3.2.2-3 | 1B | | | |
| B 3.2.3-1 | 1B | | | |
| B 3.2.3-2 | 1B | | | |
| B 3.2.3-3 | 1B | | | |
| | | | | |

# LIST OF EFFECTIVE PAGES FOR PROPOSED FSAR REVISION 1

| Page | Revision | | Page | Revision |
|---|---|---|---|---|
| 13.0-1 | 0 | | | |
| 13.1-1 | 0 | | | |
| 13.1-2 | 0 | | | |
| 13.2-1 | 0 | | | |
| 13.3-1 | 0 | | | |
| 13.3-2 | 0 | | | |
| 13.3-3 | 0 | | | |
| 13.3-4 | 0 | | | |
| 13.3-5 | 0 | | | |
| 13.3-6 | 0 | | | |
| 13.3-7 | 0 | | | |
| 13.3-8 | 0 | | | |
| 13.3-9 | 0 | | | |
| 13.3-10 | 0 | | | |
| 13.3-11 | 0 | | | |
| 13.3-12 | 0 | | | |
| 13.3-13 | 0 | | | |
| 13.3-14 | 0 | | | |
| 13.3-15 | 0 | | | |
| 13.3-16 | 0 | | | |
| 13.3-17 | 0 | | | |
| 13.3-18 | 0 | | | |
| 13.4-1 | 0 | | | |
| 13.5-1 | 0 | | | |
| 13.5-2 | 0 | | | |
| 13.6-1 | 0 | | | |
| 13.A | 10 pages | | | |
| 13.B-1 | 0 | | | |
| 13.B-2 | 0 | | | |
| 13.B-3 | 0 | | | |

# CHAPTER 1[†]: GENERAL DESCRIPTION

## 1.0 GENERAL INFORMATION

This Final Safety Analysis Report (FSAR) for Holtec International's HI-STORM 100 System is a compilation of information and analyses to support a United States Nuclear Regulatory Commission (NRC) licensing review as a spent nuclear fuel (SNF) dry storage cask under requirements specified in 10CFR72 [1.0.1]. This application seeks NRC approval and issuance of a Certificate of Compliance (C of C) for storage under provisions of 10CFR72, Subpart L, for the HI-STORM 100 System to safely store spent nuclear fuel (SNF) at an Independent Spent Fuel Storage Installation (ISFSI). This report has been prepared in the format and content suggested in NRC Regulatory Guide 3.61 [1.0.2] and NUREG-1536 Standard Review Plan for Dry Cask Storage Systems [1.0.3] to facilitate the NRC review process.

The purpose of this chapter is to provide a general description of the design features and storage capabilities of the HI-STORM 100 System, drawings of the structures, systems, and components important to safety, and the qualifications of the applicant. This report is also suitable for incorporation into a site-specific Safety Analysis Report which may be submitted by an applicant for ~~the~~ *a* license to store SNF at an ISFSI or a facility similar in objective and scope. Table 1.0.1 contains a listing of the terminology and notation used in this FSAR.

To aid NRC review, additional tables and references have been added to facilitate the location of information requested by NUREG-1536. Table 1.0.2 provides a matrix of the topics in NUREG-1536 and Regulatory Guide 3.61, the corresponding 10CFR72 requirements, and a reference to the applicable FSAR section that addresses each topic.

The HI-STORM 100 FSAR is in full compliance with the intent of all regulatory requirements listed in Section III of each chapter of NUREG-1536. However, an exhaustive review of the provisions in NUREG-1536, particularly Section IV (Acceptance Criteria) and Section V (Review Procedures) has identified certain deviations from a verbatim compliance to all *guidance* ~~requirements~~. A list of all such items, along with a discussion of their intent and Holtec International's approach for compliance with the underlying intent is presented in Table 1.0.3 herein. Table 1.0.3 also contains the justification for the alternative method for compliance adopted in this FSAR. The justification may be in the form of a supporting analysis, established industry practice, or other NRC guidance

[†] This chapter has been prepared in the format and section organization set forth in Regulatory Guide 3.61. However, the material content of this chapter also fulfills the requirements of NUREG-1536. Pagination and numbering of sections, figures, and tables are consistent with the convention set down in Chapter 1, Section 1.0, herein. Finally, all terms-of-art used in this chapter are consistent with the terminology of the glossary (Table 1.0.1) and component nomenclature of the Bill-of-Materials (Section 1.5).

documents. Each chapter in this FSAR provides a clear statement with respect to the extent of compliance to the NUREG-1536 provisions.

Chapter 1 is in full compliance with NUREG-1536; no exceptions are taken.

The generic design basis and the corresponding safety analysis of the HI-STORM 100 System contained in this FSAR are intended to bound the SNF characteristics, design, conditions, and interfaces that exist in the vast majority of domestic power reactor sites and potential away-from-reactor storage sites in the contiguous United States. This FSAR also provides the basis for component fabrication and acceptance, and the requirements for safe operation and maintenance of the components, consistent with the design basis and safety analysis documented herein. In accordance with 10CFR72, Subpart K, site-specific implementation of the generically certified HI-STORM 100 System requires that the licensee perform a site-specific safety evaluation, as defined in 10CFR72.212. The HI-STORM 100 System FSAR identifies a limited number of conditions that are necessarily site-specific and are to be addressed in the licensee's 10CFR72.212 evaluation. These include:

- Siting of the ISFSI and design of the storage pad *(including the embedment for anchored cask users)* and security system. Site-specific demonstration of compliance with regulatory dose limits. Implementation of a site-specific ALARA program.

- An evaluation of site-specific hazards and design conditions that may exist at the ISFSI site or the transfer route between the plant's cask receiving bay and the ISFSI. These include, but are not limited to, explosion and fire hazards, flooding conditions, land slides, and lightning protection.

- Determination that the physical and nucleonic characteristics and the condition of the SNF assemblies to be dry stored meet the fuel acceptance requirements of the Certificate of Compliance.

- An evaluation of interface and design conditions that exist within the plant's fuel building in which canister fuel loading, canister closure, and canister transfer operations are to be conducted in accordance with the applicable 10CFR50 requirements and technical specifications for the plant.

- Detailed site-specific operating, maintenance, and inspection procedures prepared in accordance with the generic procedures and requirements provided in Chapters 8 and 9, and the technical specifications provided in the Certificate of Compliance.

- Performance of pre-operational testing.

- Implementation of a safeguards and accountability program in accordance with

10CFR73. Preparation of a physical security plan in accordance with 10CFR73.55.

- Review of the reactor emergency plan, quality assurance (QA) program, training program, and radiation protection program.

The generic safety analyses contained in the HI-STORM 100 FSAR may be used as input and for guidance by the licensee in performing a 10CFR72.212 evaluation.

Within this report, all figures, tables and references cited are identified by the double decimal system m.n.i, where m is the chapter number, n is the section number, and i is the sequential number. Thus, for example, Figure 1.2.3 is the third figure in Section 1.2 of Chapter 1.

*Revisions to this document are made on a section level basis. Complete sections have been replaced if any material in the section changed. The specific changes are noted with revision bars in the right margin. Figures are revised individually. Drawings are controlled separately within the Holtec QA program and have individual revision numbers. Bills-of-Material (BOMs) are considered separate drawings and are not necessarily at the same revision level as the drawing(s) to which they apply. If a drawing or BOM was revised in support of the current FSAR revision, that drawing/BOM is included in Section 1.5 at its latest revision level. Drawings and BOMs appearing in this FSAR may be revised between formal updates to the FSAR. Therefore, the revisions of drawings/BOMs in Section 1.5 may not be current. Drawing users should always consult the latest revisions of drawings/BOMs in work activities. The latest revisions of these documents are available through Holtec International.*

## Table 1.0.1

## TERMINOLOGY AND NOTATION

**ALARA** is an acronym for As Low As Reasonably Achievable.

**Boral** is a generic term to denote an aluminum-boron carbide cermet manufactured in accordance with U.S. Patent No. 4027377. The individual material supplier may use another trade name to refer to the same product.

**Boral™** means Boral manufactured by AAR Advanced Structures.

**BWR** is an acronym for boiling water reactor.

**C.G.** is an acronym for center of gravity.

**Confinement Boundary** means the outline formed by the sealed, cylindrical enclosure of the Multi-Purpose Canister (MPC) shell welded to a solid baseplate, a lid welded around the top circumference of the shell wall, the port cover plates welded to the lid, and the closure ring welded to the lid and MPC shell providing the redundant sealing.

**Confinement System** means the Multi-Purpose Canister (MPC) which encloses and confines the spent nuclear fuel during storage.

**Controlled Area** means that area immediately surrounding an ISFSI for which the owner/user exercises authority over its use and within which operations are performed.

***Cooling Time*** *for a spent fuel assembly is the time between its discharge from the reactor (reactor shutdown) and the time the spent fuel assembly is loaded into the MPC.*

**DBE** means Design Basis Earthquake.

**DCSS** is an acronym for Dry Cask Storage System.

**Damaged Fuel Assembly** is a fuel assembly with known or suspected cladding defects, as determined by review of records, greater than pinhole leaks or hairline cracks, ~~*missing*~~ *empty* fuel rod *locations* that are not replaced with dummy fuel rods, or those that cannot be handled by normal means. ~~*A damaged fuel assembly's inability to be handled by normal means may be due to mechanical damage and must not be due to fuel cladding damage.*~~ *Fuel assemblies that cannot be handled by normal means due to fuel cladding damage are considered fuel debris.*

**Damaged Fuel Container** ***(or Canister)*** means a specially designed enclosure for damaged fuel or fuel debris which permits gaseous and liquid media to escape while minimizing dispersal of gross

particulates. The Damaged Fuel Container/*Canister* (DFC) features a lifting location which is suitable for remote handling of a loaded or unloaded DFC.

**Design Life** is the minimum duration for which the component is engineered to perform its intended function set forth in this FSAR, if operated and maintained in accordance with this FSAR.

**Design Report** is a document prepared, reviewed and QA validated in accordance with the provisions of 10CFR72 Subpart G. The Design Report shall demonstrate compliance with the requirements set forth in the Design Specification. A Design Report is mandatory for systems, structures, and components designated as Important to Safety.

**Design Specification** is a document prepared in accordance with the quality assurance requirements of 10CFR72 Subpart G to provide a complete set of design criteria and functional requirements for a system, structure, or component, designated as Important to Safety, intended to be used in the operation, implementation, or decommissioning of the HI-STORM 100 System.

**Enclosure Vessel** means the pressure vessel defined by the cylindrical shell, baseplate, port cover plates, lid, and closure ring which provides confinement for the helium gas contained within the MPC. The Enclosure Vessel (EV) and the fuel basket together constitute the multi-purpose canister.

**Fracture Toughness** is a property which is a measure of the ability of a material to limit crack propagation under a suddenly applied load.

**Fuel Basket** means a honeycombed structural weldment with square openings which can accept a fuel assembly of the type for which it is designed.

**Fuel Debris** refers to ruptured fuel rods, severed rods, ~~and~~ loose fuel pellets, *or fuel assemblies* with known or suspected defects which cannot be handled by normal means due to fuel cladding damage.

***High Burnup Fuel** is a spent fuel assembly with an average burnup greater than 45,000 MWD/MTU.*

**HI-TRAC transfer cask or HI-TRAC** means the transfer cask used to house the MPC during MPC fuel loading, unloading, drying, sealing, and on-site transfer operations to a HI-STORM storage overpack or HI-STAR storage/transportation overpack. The HI-TRAC shields the loaded MPC allowing loading operations to be performed while limiting radiation exposure to personnel. The HI-TRAC is equipped with a pair of lifting trunnions and pocket trunnions to lift and downend/upend the HI-TRAC with a loaded MPC. HI-TRAC is an acronym for **H**oltec **I**nternational **Tra**nsfer **C**ask. In this submittal there are two HI-TRAC transfer casks, the 125 ton HI-TRAC (HI-TRAC-125) and

the 100 ton HI-TRAC (HI-TRAC-100). The 100 ton HI-TRAC is provided for use at sites with a maximum crane capacity of ~~*100*~~ *less than 125* tons. The term HI-TRAC is used as a generic term to refer to both the 125 ton and 100 ton HI-TRAC.

**HI-STORM 100 overpack** or storage overpack means the cask ~~*which*~~ *that* receives and contains the sealed multi-purpose canisters containing spent nuclear fuel. It provides the gamma and neutron shielding, ventilation passages, missile protection, and protection against natural phenomena and accidents for the MPC. *The term "overpack" as used in this FSAR refers to both the standard design overpack (HI-STORM 100), the alternate design overpack (HI-STORM 100S), and either of these as an overpack designed for high seismic deployment (HI-STORM 100A or HI-STORM 100SA), unless otherwise clarified.*

**HI-STORM 100 System** consists of a loaded MPC placed within the HI-STORM 100 overpack.

~~***Holtite*** *™ is a trade name denoting an approved neutron shield material for use in the HI-STORM 100 System. In this application, Holtite-A is the only approved neutron shield material.*~~

***Holtite™*** *is the trade name for all present and future neutron shielding materials formulated under Holtec International's R&D program dedicated to developing shielding materials for application in dry storage and transport systems. The Holtite development program is an ongoing experimentation effort to identify neutron shielding materials with enhanced shielding and temperature tolerance characteristics. Holtite-A ™ is the first and only shielding material qualified under the Holtite R&D program. As such, the terms Holtite and Holtite-A may be used interchangeably throughout this FSAR.*

**Holtite™-A** is a *trademarked Holtec International neutron shield material.* ~~*commercially available neutron shield material developed by Bisco, Inc., and currently sold under the trade name NS-4-FR. The neutron shield material is specified with a minimum $B_4C$ loading of 1 weight percent. An equivalent neutron shield material with equivalent neutron shielding properties and composition, but not sold under the trade name NS-4-FR, may be used.*~~

**Important to Safety** (ITS) means a function or condition required to store spent nuclear fuel safely; to prevent damage to spent nuclear fuel during handling and storage, and to provide reasonable assurance that spent nuclear fuel can be received, handled, packaged, stored, and retrieved without undue risk to the health and safety of the public.

**Independent Spent Fuel Storage Installation (ISFSI)** means a facility designed, constructed, and licensed for the interim storage of spent nuclear fuel and other radioactive materials associated with

spent fuel storage in accordance with 10CFR72.

**Intact Fuel Assembly** is defined as a fuel assembly without known or suspected cladding defects greater than pinhole leaks and hairline cracks, and which can be handled by normal means. Partial fuel assemblies, that is fuel assemblies from which fuel rods are missing, shall not be classified as Intact Fuel Assemblies unless dummy fuel rods are used to displace an amount of water greater than or equal to that displaced by the original fuel rod(s).

**License Life** means the duration for which the system is authorized by virtue of its certification by the U.S. NRC.

**Lowest Service Temperature (LST)** is the minimum metal temperature of a part for the specified service condition.

**Maximum Reactivity** means the highest possible k-effective including bias, uncertainties, and calculational statistics evaluated for the worst-case combination of fuel basket manufacturing tolerances.

**METCON™** is a trade name for the HI-STORM 100 overpack. The trademark is derived from the **met**al-**con**crete composition of the HI-STORM 100 overpack.

**MGDS** is an acronym for Mined Geological Disposal System.

***Moderate Burnup Fuel*** *is a spent fuel assembly with an average burnup less than or equal to 45,000 MWD/MTU.*

**Multi-Purpose Canister (MPC)** means the sealed canister which consists of a honeycombed fuel basket for spent nuclear fuel storage, contained in a cylindrical canister shell which is welded to a baseplate, lid with welded port cover plates, and closure ring. MPC is an acronym for multi-purpose canister. There are different MPCs with different fuel basket geometries for storing PWR or BWR fuel, but all MPCs have identical exterior dimensions. The MPC is the confinement boundary for storage conditions. ~~*The MPCs used as part of the HI-STORM 100 System are identical to the HI-STAR 100 MPCs evaluated in the HI-STAR 100 storage (Docket No. 72-1008) and transport (Docket No. 71-9261) applications.*~~

**NDT** is an acronym for Nil Ductility Transition Temperature, which is defined as the temperature at which the fracture stress in a material with a small flaw is equal to the yield stress in the same material if it had no flaws.

**Table 1.0.1 (continued)**

**TERMINOLOGY AND NOTATION**

**Neutron Shielding** means a material used to thermalize and capture neutrons emanating from the radioactive spent nuclear fuel.

***Non-Fuel Hardware*** *is defined as Burnable Poison Rod Assemblies (BPRAs), Thimble Plug Devices (TPDs), Control Rod Assemblies (CRAs), Axial Power Shaping Rods (APSRs), Wet Annular Burnable Absorbers (WABAs), Rod Cluster Control Assemblies (RCCAs), Control element assemblies, water displacement guide tube plugs, and orifice rod assemblies.*

**Planar-Average Initial Enrichment** is the average of the distributed fuel rod initial enrichments within a given axial plane of the assembly lattice.

***Preferential Fuel Loading*** *is a requirement in the CoC applicable to uniform fuel loading whenever fuel assemblies with significantly different post-irradiation cooling times ($\geq$ 1 year) are to be loaded in the same MPC. Fuel assemblies with the longest post-irradiation cooling time are loaded into fuel storage locations at the periphery of the basket. Fuel assemblies with shorter post-irradiation cooling times are placed toward the center of the basket. Regionalized fuel loading meets the intent of preferential fuel loading. Preferential fuel loading is a requirement in addition to other restrictions in the CoC such as those for non-fuel hardware and damaged fuel containers.*

***Post-Core Decay Time (PCDT)*** *is synonymous with cooling time.*

**PWR** is an acronym for pressurized water reactor.

**Reactivity** is used synonymously with effective neutron multiplication factor or k-effective.

***Regionalized Fuel Loading*** *is a term used to describe an optional fuel loading strategy used in lieu of uniform fuel loading. Regionalized fuel loading allows high heat emitting fuel assemblies to be stored in fuel storage locations in the center of the fuel basket provided lower heat emitting fuel assemblies are stored in the peripheral fuel storage locations. Users choosing regionalized fuel loading must also consider other restrictions in the CoC such as those for non-fuel hardware and damaged fuel containers. Regionalized fuel loading meets the intent of preferential fuel loading.*

**SAR** is an acronym for Safety Analysis Report (10CFR71).

**Service Life** means the duration for which the component is reasonably expected to perform its intended function, if operated and maintained in accordance with the provisions of this FSAR. Service Life may be much longer than the Design Life because of the conservatism inherent in the codes, standards, and procedures used to design, fabricate, operate, and maintain the component.

**Table 1.0.1 (continued)**

**TERMINOLOGY AND NOTATION**

**Single Failure Proof** means that the handling system is designed so that all directly loaded tension and compression members are engineered to satisfy the enhanced safety criteria of Paragraphs 5.1.6(1)(a) and (b) of NUREG-0612.

**SNF** is an acronym for spent nuclear fuel.

**SSC** is an acronym for Structures, Systems and Components.

**STP** is Standard Temperature and Pressure conditions.

***Thermosiphon*** *is the term used to describe the buoyancy-driven natural convection circulation of helium within the MPC fuel basket.*

**FSAR** is an acronym for Final Safety Analysis Report (10CFR72).

***Uniform Fuel Loading*** *is a fuel loading strategy where any authorized fuel assembly may be stored in any fuel storage location, subject to other restrictions in the CoC, such as preferential fuel loading, and those applicable to non-fuel hardware, and damaged fuel containers.*

**ZPA** is an acronym for zero period acceleration.

**Table 1.0.2**

**HI-STORM 100 SYSTEM FSAR REGULATORY COMPLIANCE CROSS-REFERENCE MATRIX**

| Regulatory Guide 3.61 Section and Content | Associated NUREG-1536 Review Criteria | Applicable 10CFR72 or 10CFR20 Requirement | HI-STORM FSAR |
|---|---|---|---|
| **1. General Description** | | | |
| 1.1 Introduction | 1.III.1 General Description & Operational Features | 10CFR72.24(b) | 1.1 |
| 1.2 General Description | 1.III.1 General Description & Operational Features | 10CFR72.24(b) | 1.2 |
| 1.2.1 Cask Character-istics | 1.III.1 General Description & Operational Features | 10CFR72.24(b) | 1.2.1 |
| 1.2.2 Operational Features | 1.III.1 General Description & Operational Features | 10CFR72.24(b) | 1.2.2 |
| 1.2.3 Cask Contents | 1.III.3 DCSS Contents | 10CFR72.2(a)(1)<br>10CFR72.236(a) | 1.2.3 |
| 1.3 Identification of Agents & Contractors | 1.III.4 Qualification of the Applicant | 10CFR72.24(j)<br>10CFR72.28(a) | 1.3 |
| 1.4 Generic Cask Arrays | 1.III.1 General Description & Operational Features | 10CFR72.24(c)(3) | 1.4 |
| 1.5 Supplemental Data | 1.III.2 Drawings | 10CFR72.24(c)(3) | 1.5 |
| NA | 1.III.6 Consideration of Transport Requirements | 10CFR72.230(b)<br>10CFR72.236(m) | 1.1 |
| NA | 1.III.5 Quality Assurance | 10CFR72.24(n) | 1.3 |
| **2. Principal Design Criteria** | | | |
| 2.1 Spent Fuel To Be Stored | 2.III.2.a Spent Fuel Specifications | 10CFR72.2(a)(1)<br>10CFR72.236(a) | 2.1 |
| 2.2 Design Criteria for Environmental Conditions and Natural Phenomena | 2.III.2.b External Conditions,<br>2.III.3.b Structural,<br>2.III.3.c Thermal | 10CFR72.122(b) | 2.2 |
| | | 10CFR72.122(c) | 2.2.3.3, 2.2.3.10 |
| | | 10CFR72.122(b)(1) | 2.2 |
| | | 10CFR72.122(b)(2) | 2.2.3.11 |
| | | 10CFR72.122(h)(1) | 2.0 |

**Table 1.0.2 (continued)**

**HI-STORM 100 SYSTEM FSAR REGULATORY COMPLIANCE CROSS REFERENCE MATRIX**

| Regulatory Guide 3.61 Section and Content | Associated NUREG-1536 Review Criteria | Applicable 10CFR72 or 10CFR20 Requirement | HI-STORM FSAR |
|---|---|---|---|
| 2.2.1 Tornado and Wind Loading | 2.III.2.b External Conditions | 10CFR72.122(b)(2) | 2.2.3.5 |
| 2.2.2 Water Level (Flood) | 2.III.2.b External Conditions<br>2.III.3.b Structural | 10CFR72.122(b)(2) | 2.2.3.6 |
| 2.2.3 Seismic | 2.III.3.b Structural | 10CFR72.102(f)<br>10CFR72.122(b)(2) | 2.2.3.7 |
| 2.2.4 Snow and Ice | 2.III.2.b External Conditions<br>2.III.3.b Structural | 10CFR72.122(b) | 2.2.1.6 |
| 2.2.5 Combined Load | 2.III.3.b Structural | 10CFR72.24(d)<br>10CFR72.122(b)(2)(ii) | 2.2.7 |
| NA | 2.III.1 Structures, Systems, and Components Important to Safety | 10CFR72.122(a)<br>10CFR72.24(c)(3) | 2.2.4 |
| NA | 2.III.2 Design Criteria for Safety Protection Systems | 10CFR72.236(g)<br>10CFR72.24(c)(1)<br>10CFR72.24(c)(2)<br>10CFR72.24(c)(4)<br>10CFR72.120(a)<br>10CFR72.236(b) | 2.0, 2.2 |
| NA | 2.III.3.c Thermal | 10CFR72.128(a)(4) | 2.3.2.2, 4.0 |
| NA | 2.III.3f Operating Procedures | 10CFR72.24(f)<br>10CFR72.128(a)(5) | 10.0, 8.0 |
| | | 10CFR72.236(h) | 8.0 |
| | | 10CFR72.24(1)(2) | 1.2.1, 1.2.2 |
| | | 10CFR72.236(1) | 2.3.2.1 |
| | | 10CFR72.24(e)<br>10CFR72.104(b) | 10.0, 8.0 |

**Table 1.0.2 (continued)**

**HI-STORM 100 SYSTEM FSAR REGULATORY COMPLIANCE CROSS REFERENCE MATRIX**

| Regulatory Guide 3.61 Section and Content | Associated NUREG-1536 Review Criteria | Applicable 10CFR72 or 10CFR20 Requirement | HI-STORM FSAR |
|---|---|---|---|
| | 2.III.3.g Acceptance Tests & Maintenance | 10CFR72.122(1)<br>10CFR72.236(g)<br>10CFR72.122(f)<br>10CFR72.128(a)(1) | 9.0 |
| 2.3 Safety Protection Systems | -- | -- | 2.3 |
| 2.3.1 General | -- | -- | 2.3 |
| 2.3.2 Protection by Multiple Confinement Barriers and Systems | 2.III.3.b Structural | 10CFR72.236(1) | 2.3.2.1 |
| | 2.III.3.c Thermal | 10CFR72.236(f) | 2.3.2.2 |
| | 2.III.3.d Shielding/ Confinement/ Radiation Protection | 10CFR72.126(a)<br>10CFR72.128(a)(2) | 2.3.5.2 |
| | | 10CFR72.128(a)(3) | 2.3.2.1 |
| | | 10CFR72.236(d) | 2.3.2.1, 2.3.5.2 |
| | | 10CFR72.236(e) | 2.3.2.1 |
| 2.3.3 Protection by Equipment & Instrument Selection | 2.III.3.d Shielding/ Confinement/ Radiation Protection | 10CFR72.122(h)(4)<br>10CFR72.122(i)<br>10CFR72.128(a)(1) | 2.3.5 |
| 2.3.4 Nuclear Criticality Safety | 2.III.3.e Criticality | 10CFR72.124(a)<br>10CFR72.236(c)<br>10CFR72.124(b) | 2.3.4, 6.0 |
| 2.3.5 Radiological Protection | 2.III.3.d Shielding/ Confinement/ Radiation Protection | 10CFR72.24(d)<br>10CFR72.104(a)<br>10CFR72.236(d) | 10.4.1 |
| | | 10CFR72.24(d)<br>10CFR72.106(b)<br>10CFR72.236(d) | 10.4.2 |
| | | 10CFR72.24(m) | 2.3.2.1 |

**Table 1.0.2 (continued)**

**HI-STORM 100 SYSTEM FSAR REGULATORY COMPLIANCE CROSS REFERENCE MATRIX**

| Regulatory Guide 3.61 Section and Content | Associated NUREG-1536 Review Criteria | Applicable 10CFR72 or 10CFR20 Requirement | HI-STORM FSAR |
|---|---|---|---|
| 2.3.6 Fire and Explosion Protection | 2.III.3.b Structural | 10CFR72.122(c) | 2.3.6, 2.2.3.10 |
| 2.4 Decommissioning Considerations | 2.III.3.h Decommissioning | 10CFR72.24(f)<br>10CFR72.130<br>10CFR72.236(h) | 2.4 |
| | 14.III.1 Design | 10CFR72.130 | 2.4 |
| | 14.III.2 Cask Decontamination | 10CFR72.236(i) | 2.4 |
| | 14.III.3 Financial Assurance & Record Keeping | 10CFR72.30 | (1) |
| | 14.III.4 License Termination | 10CFR72.54 | (1) |
| **3. Structural Evaluation** | | | |
| 3.1 Structural Design | 3.III.1 SSC Important to Safety | 10CFR72.24(c)(3)<br>10CFR72.24(c)(4) | 3.1 |
| | 3.III.6 Concrete Structures | 10CFR72.24(c) | 3.1 |
| 3.2 Weights and Centers of Gravity | 3.V.1.b.2 Structural Design Features | -- | 3.2 |
| 3.3 Mechanical Properties of Materials | 3.V.1.c Structural Materials | 10CFR72.24(c)(3) | 3.3 |
| | 3.V.2.c Structural Materials | | |
| NA | 3.III.2 Radiation Shielding, Confinement, and Subcriticality | 10CFR72.24(d)<br>10CFR72.124(a)<br>10CFR72.236(c)<br>10CFR72.236(d)<br>10CFR72.236(1) | 3.4.4.3<br>3.4.7.3<br>3.4.10 |
| NA | 3.III.3 Ready Retrieval | 10CFR72.122(f)<br>10CFR72.122(h)<br>10CFR72.122(l) | 3.4.4.3 |
| NA | 3.III.4 Design-Basis Earthquake | 10CFR72.24(c)<br>10CFR72.102(f) | 3.4.7 |

**Table 1.0.2 (continued)**

**HI-STORM 100 SYSTEM FSAR REGULATORY COMPLIANCE CROSS REFERENCE MATRIX**

| Regulatory Guide 3.61 Section and Content | Associated NUREG-1536 Review Criteria | Applicable 10CFR72 or 10CFR20 Requirement | HI-STORM FSAR |
|---|---|---|---|
| NA | 3.III.5 20 Year Minimum Design Length | 10CFR72.24(c)<br>10CFR72.236(g) | 3.4.11<br>3.4.12 |
| 3.4 General Standards for Casks | -- | -- | 3.4 |
| 3.4.1 Chemical and Galvanic Reactions | 3.V.1.b.2 Structural Design Features | -- | 3.4.1 |
| 3.4.2 Positive Closure | -- | -- | 3.4.2 |
| 3.4.3 Lifting Devices | 3.V.1.ii(4)(a) Trunnions<br>-- | -- | 3.4.3, Appendices 3.E, 3.AC, 3.D |
| 3.4.4 Heat | 3.V.1.d Structural Analysis | 10CFR72.24(d)<br>10CFR72.122(b) | 3.4.4, Appendices 3.I, 3.U, 3.V, 3.W |
| 3.4.5 Cold | 3.V.1.d Structural Analysis | 10CFR72.24(d)<br>10CFR72.122(b) | 3.4.5 |
| 3.5 Fuel Rods | -- | 10CFR72.122(h)(1) | 3.5 |
| **4. Thermal Evaluation** | | | |
| 4.1 Discussion | 4.III Regulatory Requirements | 10CFR72.24(c)(3)<br>10CFR72.128(a)(4)<br>10CFR72.236(f)<br>10CFR72.236(h) | 4.1 |
| 4.2 Summary of Thermal Properties of Materials | 4.V.4.b Material Properties | -- | 4.2 |
| 4.3 Specifications for Components | 4.IV Acceptance Criteria | 10CFR72.122(h)(1) | 4.3 |
| 4.4 Thermal Evaluation for Normal Conditions of Storage | 4.IV Acceptance Criteria | 10CFR72.24(d)<br>10CFR72.236(g) | 4.4, 4.5 |
| NA | 4.IV Acceptance Criteria | 10CFR72.24(d)<br>10CFR72.122(c) | 11.1, 11.2 |

## Table 1.0.2 (continued)

## HI-STORM 100 SYSTEM FSAR REGULATORY COMPLIANCE CROSS REFERENCE MATRIX

| Regulatory Guide 3.61 Section and Content | Associated NUREG-1536 Review Criteria | Applicable 10CFR72 or 10CFR20 Requirement | HI-STORM FSAR |
|---|---|---|---|
| 4.5 Supplemental Data | 4.V.6 Supplemental Info. | -- | -- |
| **5. Shielding Evaluation** | | | |
| 5.1 Discussion and Results | -- | 10CFR72.104(a)<br>10CFR72.106(b) | 5.1 |
| 5.2 Source Specification | 5.V.2 Radiation Source Definition | -- | 5.2 |
| 5.2.1 Gamma Source | 5.V.2.a Gamma Source | -- | 5.2.1, 5.2.3 |
| 5.2.2 Neutron Source | 5.V.2.b Neutron Source | -- | 5.2.2, 5.2.3 |
| 5.3 Model Specification | 5.V.3 Shielding Model Specification | -- | 5.3 |
| 5.3.1 Description of the Radial and Axial Shielding Configura-tions | 5.V.3.a Configuration of the Shielding and Source | 10CFR72.24(c)(3) | 5.3.1 |
| 5.3.2 Shield Regional Densities | 5.V.3.b Material Properties | 10CFR72.24(c)(3) | 5.3.2 |
| 5.4 Shielding Evaluation | 5.V.4 Shielding Analysis | 10CFR72.24(d)<br>10CFR72.104(a)<br>10CFR72.106(b)<br>10CFR72.128(a)(2)<br>10CFR72.236(d) | 5.4 |
| 5.5 Supplemental Data | 5.V.5 Supplemental Info. | -- | Appendices 5.A, 5.B, and 5.C |

**Table 1.0.2 (continued)**

**HI-STORM 100 SYSTEM FSAR REGULATORY COMPLIANCE CROSS REFERENCE MATRIX**

| Regulatory Guide 3.61 Section and Content | Associated NUREG-1536 Review Criteria | Applicable 10CFR72 or 10CFR20 Requirement | HI-STORM FSAR |
|---|---|---|---|
| **6. Criticality Evaluation** | | | |
| 6.1 Discussion and Results | -- | -- | 6.1 |
| 6.2 Spent Fuel Loading | 6.V.2 Fuel Specification | -- | 6.1, 6.2 |
| 6.3 Model Specifications | 6.V.3 Model Specification | -- | 6.3 |
| 6.3.1 Description of Calculational Model | 6.V.3.a Configuration | -- 10CFR72.124(b) 10CFR72.24(c)(3) | 6.3.1 |
| 6.3.2 Cask Regional Densities | 6.V.3.b Material Properties | 10CFR72.24(c)(3) 10CFR72.124(b) 10CFR72.236(g) | 6.3.2 |
| 6.4 Criticality Calculations | 6.V.4 Criticality Analysis | 10CFR72.124 | 6.4 |
| 6.4.1 Calculational or Experimental Method | 6.V.4.a Computer Programs and 6.V.4.b Multiplication Factor | 10CFR72.124 | 6.4.1 |
| 6.4.2 Fuel Loading or Other Contents Loading Optimization | 6.V.3.a Configuration | -- | 6.4.2 |
| 6.4.3 Criticality Results | 6.IV Acceptance Criteria | 10CFR72.24(d) 10CFR72.124 10CFR72.236(c) | 6.1, 6.2, 6.3.1, 6.3.2 |
| 6.5 Critical Benchmark Experiments | 6.V.4.c Benchmark Comparisons | -- | 6.5, Appendix 6.A, 6.4.3 |
| 6.6 Supplemental Data | 6.V.5 Supplemental Info. | -- | Appendices 6.B,6.C, and 6.D |

## Table 1.0.2 (continued)

## HI-STORM 100 SYSTEM FSAR REGULATORY COMPLIANCE CROSS REFERENCE MATRIX

| Regulatory Guide 3.61 Section and Content | Associated NUREG-1536 Review Criteria | Applicable 10CFR72 or 10CFR20 Requirement | HI-STORM FSAR |
|---|---|---|---|
| **7. Confinement** | | | |
| 7.1 Confinement Boundary | 7.III.1 Description of Structures, Systems and Components Important to Safety | 10CFR72.24(c)(3)<br>10CFR72.24(1) | 7.0, 7.1 |
| 7.1.1 Confinement Vessel | 7.III.2 Protection of Spent Fuel Cladding | 10CFR72.122(h)(l) | 7.1, 7.1.1, 7.2.2 |
| 7.1.2 Confinement Penetrations | -- | -- | 7.1.2 |
| 7.1.3 Seals and Welds | -- | -- | 7.1.3 |
| 7.1.4 Closure | 7.III.3 Redundant Sealing | 10CFR72.236(e) | 7.1.1, 7.1.4 |
| 7.2 Requirements for Normal Conditions of Storage | 7.III.7 Evaluation of Confinement System | 10CFR72.24(d)<br>10CFR72.236(1) | 7.2 |
| 7.2.1 Release of Radioactive Material | 7.III.6 Release of Nuclides to the Environment | 10CFR72.24(1)(1) | 7.2.1 |
| | 7.III.4 Monitoring of Confinement System | 10CFR72.122(h)(4)<br>10CFR72.128(a)(l) | 7.1.4 |
| | 7.III.5 Instrumentation | 10CFR72.24(l)<br>10CFR72.122(i) | 7.1.4 |
| | 7.III.8 Annual Dose | 10CFR72.104(a) | 7.3.5 |
| 7.2.2 Pressurization of Confinement Vessel | -- | -- | 7.2.2 |
| 7.3 Confinement Requirements for Hypothetical Accident Conditions | 7.III.7 Evaluation of Confinement System | 10CFR72.24(d)<br>10CFR72.122(b)<br>10CFR72.236(l) | 7.3 |
| 7.3.1 Fission Gas Products | -- | -- | 7.3.1 |

## Table 1.0.2 (continued)

## HI-STORM 100 SYSTEM FSAR REGULATORY COMPLIANCE CROSS REFERENCE MATRIX

| Regulatory Guide 3.61 Section and Content | Associated NUREG-1536 Review Criteria | Applicable 10CFR72 or 10CFR20 Requirement | HI-STORM FSAR |
|---|---|---|---|
| 7.3.2 Release of Contents | -- | -- | 7.3.3 |
| NA | -- | 10CFR72.106(b) | 7.3 |
| 7.4 Supplemental Data | 7.V Supplemental Info. | -- | -- |
| **8. Operating Procedures** | | | |
| 8.1 Procedures for Loading the Cask | 8.III.1 Develop Operating Procedures | 10CFR72.40(a)(5) | 8.1 to 8.5 |
| | 8.III.2 Operational Restrictions for ALARA | 10CFR72.24(e)<br>10CFR72.104(b) | 8.1.5 |
| | 8.III.3 Radioactive Effluent Control | 10CFR72.24(1)(2) | 8.1.5, 8.5.2 |
| | 8.III.4 Written Procedures | 10CFR72.212(b)(9) | 8.0 |
| | 8.III.5 Establish Written Procedures and Tests | 10CFR72.234(f) | 8.0 Introduction |
| | 8.III.6 Wet or Dry Loading and Unloading Compatibility | 10CFR72.236(h) | 8.0 Introduction |
| | 8.III.7 Cask Design to Facilitate Decon | 10CFR72.236(i) | 8.1, 8.3 |
| 8.2 Procedures for Unloading the Cask | 8.III.1 Develop Operating Procedures | 10CFR72.40(a)(5) | 8.3 |
| | 8.III.2 Operational Restrictions for ALARA | 10CFR72.24(e)<br>10CFR72.104(b) | 8.3 |
| | 8.III.3 Radioactive Effluent Control | 10CFR72.24(1)(2) | 8.3.3 |
| | 8.III.4 Written Procedures | 10CFR72.212(b)(9) | 8.0 |
| | 8.III.5 Establish Written Procedures and Tests | 10CFR72.234(f) | 8.0 |

## Table 1.0.2 (continued)

## HI-STORM 100 SYSTEM FSAR REGULATORY COMPLIANCE CROSS REFERENCE MATRIX

| Regulatory Guide 3.61 Section and Content | Associated NUREG-1536 Review Criteria | Applicable 10CFR72 or 10CFR20 Requirement | HI-STORM FSAR |
|---|---|---|---|
| | 8.III.6 Wet or Dry Loading and Unloading Compatibility | 10CFR72.236(h) | 8.0 |
| | 8.III.8 Ready Retrieval | 10CFR72.122(1) | 8.3 |
| 8.3 Preparation of the Cask | -- | -- | 8.3.2 |
| 8.4 Supplemental Data | -- | -- | Tables 8.1.1 to 8.1.10 |
| NA | 8.III.9 Design to Minimize Radwaste | 10CFR72.24(f) 10CFR72.128(a)(5) | 8.1, 8.3 |
| | 8.III.10 SSCs Permit Inspection, Maintenance, and Testing | 10CFR72.122(f) | Table 8.1.6 |
| **9. Acceptance Criteria and Maintenance Program** | | | |
| 9.1 Acceptance Criteria | 9.III.1.a Preoperational Testing & Initial Operations | 10CFR72.24(p) | 8.1, 9.1 |
| | 9.III.1.c SSCs Tested and Maintained to Appropriate Quality Standards | 10CFR72.24(c) 10CFR72.122(a) | 9.1 |
| | 9.III.1.d Test Program | 10CFR72.162 | 9.1 |
| | 9.III.1.e Appropriate Tests | 10CFR72.236(1) | 9.1 |
| | 9.III.1.f Inspection for Cracks, Pinholes, Voids and Defects | 10CFR72.236(j) | 9.1 |
| | 9.III.1.g Provisions that Permit Commission Tests | 10CFR72.232(b) | 9.1(2) |

**Table 1.0.2 (continued)**

**HI-STORM 100 SYSTEM FSAR REGULATORY COMPLIANCE CROSS REFERENCE MATRIX**

| Regulatory Guide 3.61 Section and Content | Associated NUREG-1536 Review Criteria | Applicable 10CFR72 or 10CFR20 Requirement | HI-STORM FSAR |
|---|---|---|---|
| 9.2 Maintenance Program | 9.III.1.b Maintenance | 10CFR72.236(g) | 9.2 |
| | 9.III.1.c SSCs Tested and Maintained to Appropriate Quality Standards | 10CFR72.122(f)<br>10CFR72.128(a)(1) | 9.2 |
| | 9.III.1.h Records of Maintenance | 10CFR72.212(b)(8) | 9.2 |
| NA | 9.III.2 Resolution of Issues Concerning Adequacy of Reliability | 10CFR72.24(i) | (3) |
| | 9.III.1.d Submit Pre-Op Test Results to NRC | 10CFR72.82(e) | (4) |
| | 9.III.1.i Casks Conspicuously and Durably Marked | 10CFR72.236(k) | 9.1.7, 9.1.1.(12) |
| | 9.III.3 Cask Identification | | |
| **10. Radiation Protection** | | | |
| 10.1 Ensuring that Occupational Exposures are as Low as Reasonably Achievable (ALARA) | 10.III.4 ALARA | 10CFR20.1101<br>10CFR72.24(e)<br>10CFR72.104(b)<br>10CFR72.126(a) | 10.1 |
| 10.2 Radiation Protection Design Features | 10.V.1.b Design Features | 10CFR72.126(a)(6) | 10.2 |
| 10.3 Estimated Onsite Collective Dose Assessment | 10.III.2 Occupational Exposures | 10CFR20.1201<br>10CFR20.1207<br>10CFR20.1208<br>10CFR20.1301 | 10.3 |

## Table 1.0.2 (continued)

## HI-STORM 100 SYSTEM FSAR REGULATORY COMPLIANCE CROSS REFERENCE MATRIX

| Regulatory Guide 3.61 Section and Content | Associated NUREG-1536 Review Criteria | Applicable 10CFR72 or 10CFR20 Requirement | HI-STORM FSAR |
|---|---|---|---|
| N/A | 10.III.3 Public Exposure | 10CFR72.104<br>10CFR72.106 | 10.4 |
| | 10.III.1 Effluents and Direct Radiation | 10CFR72.104 | |
| **11. Accident Analyses** | | | |
| 11.1 Off-Normal Operations | 11.III.2 Meet Dose Limits for Anticipated Events | 10CFR72.24(d)<br>10CFR72.104(a)<br>10CFR72.236(d) | 11.1 |
| | 11.III.4 Maintain Subcritical Condition | 10CFR72.124(a)<br>10CFR72.236(c) | 11.1 |
| | 11.III.7 Instrumentation and Control for Off-Normal Condition | 10CFR72.122(i) | 11.1 |
| 11.2 Accidents | 11.III.1 SSCs Important to Safety Designed for Accidents | 10CFR72.24(d)(2)<br>10CFR72.122b(2)<br>10CFR72.122b(3)<br>10CFR72.122(d)<br>10CFR72.122(g) | 11.2 |
| | 11.III.5 Maintain Confinement for Accident | 10CFR72.236(1) | 11.2 |
| | 11.III.4 Maintain Subcritical Condition | 10CFR72.124(a)<br>10CFR72.236(c) | 11.2, 6.0 |
| | 11.III.3 Meet Dose Limits for Accidents | 10CFR72.24(d)(2)<br>10CFR72.24(m)<br>10CFR72.106(b) | 11.2, 5.1.2, 7.3 |
| | 11.III.6 Retrieval | 10CFR72.122(l) | 8.3 |
| | 11.III.7 Instrumentation and Control for Accident Conditions | 10CFR72.122(i) | (5) |

**Table 1.0.2 (continued)**

**HI-STORM 100 SYSTEM FSAR REGULATORY COMPLIANCE CROSS REFERENCE MATRIX**

| Regulatory Guide 3.61 Section and Content | Associated NUREG-1536 Review Criteria | Applicable 10CFR72 or 10CFR20 Requirement | HI-STORM FSAR |
|---|---|---|---|
| NA | 11.III.8 Confinement Monitoring | 10CFR72.122h(4) | 7.1.4 |
| **12. Operating Controls and Limits** | | | |
| 12.1 Proposed Operating Controls and Limits | -- | 10CFR72.44(c) | 12.0 |
| | 12.III.1.e Administrative Controls | 10CFR72.44(c)(5) | 12.0 |
| 12.2 Development of Operating Controls and Limits | 12.III.1 General Requirement for Technical Specifications | 10CFR72.24(g)<br>10CFR72.26<br>10CFR72.44(c)<br>10CFR72 Subpart E<br>10CFR72 Subpart F | 12.0 |
| 12.2.1 Functional and Operating Limits, Monitoring Instruments, and Limiting Control Settings | 12.III.1.a Functional/ Operating Units, Monitoring Instruments and Limiting Controls | 10CFR72.44(c)(1) | Appendix 12.A |
| 12.2.2 Limiting Conditions for Operation | 12.III.1.b Limiting Controls | 10CFR72.44(c)(2) | Appendix 12.A |
| | 12.III.2.a Type of Spent Fuel | 10CFR72.236(a) | Appendix 12.A |
| | 12.III.2.b Enrichment | | |
| | 12.III.2.c Burnup | | |
| | 12.III.2.d Minimum Acceptance Cooling Time | | |
| | 12.III.2.f Maximum Spent Fuel Loading Limit | | |

**Table 1.0.2 (continued)**

**HI-STORM 100 SYSTEM FSAR REGULATORY COMPLIANCE CROSS REFERENCE MATRIX**

| Regulatory Guide 3.61 Section and Content | Associated NUREG-1536 Review Criteria | Applicable 10CFR72 or 10CFR20 Requirement | HI-STORM FSAR |
|---|---|---|---|
| | 12.III.2g Weights and Dimensions | | |
| | 12.III.2.h Condition of Spent Fuel | | |
| | 12.III.2e Maximum Heat Dissipation | 10CFR72.236(a) | Appendix 12.A |
| | 12.III.2.i Inerting Atmosphere Requirements | 10CFR72.236(a) | Appendix 12.A |
| 12.2.3 Surveillance Specifications | 12.III.1.c Surveillance Requirements | 10CFR72.44(c)(3) | Chapter 12 |
| 12.2.4 Design Features | 12.III.1.d Design Features | 10CFR72.44(c)(4) | Chapter 12 |
| 12.2.4 Suggested Format for Operating Controls and Limits | -- | -- | Appendix 12.A |
| NA | 12.III.2 SCC Design Bases and Criteria | 10CFR72.236(b) | 2.0 |
| NA | 12.III.2 Criticality Control | 10CFR72.236(c) | 2.3.4, 6.0 |
| NA | 12.III.2 Shielding and Confinement | 10CFR20<br>10CFR72.236(d) | 2.3.5, 7.0, 5.0, 10.0 |
| NA | 12.III.2 Redundant Sealing | 10CFR72.236(e) | 7.1, 2.3.2 |
| NA | 12.III.2 Passive Heat Removal | 10CFR72.236(f) | 2.3.2.2, 4.0 |
| NA | 12.III.2 20 Year Storage and Maintenance | 10CFR72.236(g) | 1.2.1.5, 9.0, 3.4.10, 3.4.11 |
| NA | 12.III.2 Decontamination | 10CFR72.236(i) | 8.0, 10.1 |
| NA | 12.III.2 Wet or Dry Loading | 10CFR72.236(h) | 8.0 |
| NA | 12.III.2 Confinement Effectiveness | 10CFR72.236(j) | 9.0 |
| NA | 12.III.2 Evaluation for Confinement | 10CFR72.236(l) | 7.1, 7.2, 9.0 |

**Table 1.0.2 (continued)**

**HI-STORM 100 SYSTEM FSAR REGULATORY COMPLIANCE CROSS REFERENCE MATRIX**

| Regulatory Guide 3.61 Section and Content | Associated NUREG-1536 Review Criteria | Applicable 10CFR72 or 10CFR20 Requirement | HI-STORM FSAR |
|---|---|---|---|
| **13. Quality Assurance** | | | |
| 13.1 Quality Assurance | 13.III Regulatory Requirements | 10CFR72.24(n) | 13.0 |
| | 13.IV Acceptance Criteria | 10CFR72, Subpart G | |

Notes:

(1) The stated requirement is the responsibility of the licensee (i.e., utility) as part of the ISFSI pad and is therefore not addressed in this application.

(2) It is assumed that approval of the FSAR by the NRC is the basis for the Commission's acceptance of the tests defined in Chapter 9.

(3) Not applicable to HI-STORM 100 System. The functional adequacy of all important to safety components is demonstrated by analyses.

(4) The stated requirement is the responsibility of licensee (i.e., utility) as part of the ISFSI and is therefore not addressed in this application.

(5) The stated requirement is not applicable to the HI-STORM 100 System. No monitoring is required for accident conditions.

"—" There is no corresponding NUREG-1536 criteria, no applicable 10CFR72 or 10CFR20 regulatory requirement, or the item is not addressed in the FSAR.

"NA" There is no Regulatory Guide 3.61 section that corresponds to the NUREG-1536, 10CFR72, or 10CFR20 requirement being addressed.

**Table 1.0.2 (continued)**

**HI-STORM 100 SYSTEM FSAR REGULATORY COMPLIANCE CROSS REFERENCE MATRIX**

| Regulatory Guide 3.61 Section and Content | Associated NUREG-1536 Review Criteria | Applicable 10CFR72 or 10CFR20 Requirement | HI-STORM FSAR |
|---|---|---|---|
| NA | 12.III.2 Shielding and Confinement | 10CFR20 10CFR72.236(d) | 2.3.5, 7.0, 5.0, 10.0 |
| NA | 12.III.2 Redundant Sealing | 10CFR72.236(e) | 7.1, 2.3.2 |
| NA | 12.III.2 Passive Heat Removal | 10CFR72.236(f) | 2.3.2.2, 4.0 |
| NA | 12.III.2 20 Year Storage and Maintenance | 10CFR72.236(g) | 1.2.1.5, 9.0, 3.4.10, 3.4.11 |
| NA | 12.III.2 Decontamination | 10CFR72.236(i) | 8.0, 10.1 |
| NA | 12.III.2 Wet or Dry Loading | 10CFR72.236(h) | 8.0 |
| NA | 12.III.2 Confinement Effectiveness | 10CFR72.236(j) | 9.0 |
| NA | 12.III.2 Evaluation for Confinement | 10CFR72.236(l) | 7.1, 7.2, 9.0 |
| **13. Quality Assurance** | | | |
| 13.1 Quality Assurance | 13.III Regulatory Requirements | 10CFR72.24(n) | 13.0 |
| | 13.IV Acceptance Criteria | 10CFR72, Subpart G | |

Notes:

(1) The stated requirement is the responsibility of the licensee (i.e., utility) as part of the ISFSI pad and is therefore not addressed in this application.

(2) It is assumed that approval of the FSAR by the NRC is the basis for the Commission's acceptance of the tests defined in Chapter 9.

(3) Not applicable to HI-STORM 100 System. The functional adequacy of all important to safety components is demonstrated by analyses.

(4) The stated requirement is the responsibility of licensee (i.e., utility) as part of the ISFSI and is therefore not addressed in this application.

(5) The stated requirement is not applicable to the HI-STORM 100 System. No monitoring

Table 1.0.3

HI-STORM 100 SYSTEM FSAR CLARIFICATIONS AND EXCEPTIONS TO NUREG-1536

| NUREG-1536 Requirement | Alternate Method to Meet NUREG-1536 Intent | Justification |
|---|---|---|
| 2.V.2.(b)(1) "The NRC accepts as the maximum and minimum "normal" temperatures the highest and lowest ambient temperatures recorded in each year, averaged over the years of record." | Exception: Section 2.2.1.4 for environmental temperatures utilizes an upper bounding value of 80°F on the annual average ambient temperatures for the United States. | The 80°F temperature set forth in Table 2.2.2 is greater than the annual average ambient temperature at any location in the continental United States. Inasmuch as the primary effect of the environmental temperature is on the computed fuel cladding temperature to establish long-term fuel cladding integrity, the annual average ambient temperature for each ISFSI site should be below 80°F. The large thermal inertia of the HI-STORM 100 System ensures that the daily fluctuations in temperatures do not affect the temperatures of the system. Additionally, the 80°F ambient temperature is combined with insolation in accordance with 10CFR71.71 averaged over 24 hours. |
| 2.V.2.(b)(3)(f) "10CFR Part 72 identifies several other natural phenomena events (including seiche, tsunami, and hurricane) that should be addressed for spent fuel storage." | Clarification: A site-specific safety analysis of the effects of seiche, tsunami, and hurricane on the HI-STORM 100 System must be performed prior to use if these events are applicable to the site. | In accordance with NUREG-1536, 2.V.(b)(3)(f), if seiche, tsunami, and hurricane are not addressed in the SAR and they prove to be applicable to the site, a safety analysis is required prior to approval for use of the DCSS under either a site specific, or general license. |

Table 1.0.3 (continued)

HI-STORM 100 SYSTEM FSAR CLARIFICATIONS AND EXCEPTIONS TO NUREG-1536

| NUREG-1536 Requirement | Alternate Method to Meet NUREG-1536 Intent | Justification |
|---|---|---|
| 3.V.1.d.i.(2)(a), page 3-11, "Drops with the axis generally vertical should be analyzed for both the conditions of a flush impact and an initial impact at a corner of the cask..." | Clarification: As stated in NUREG-1536, 3.V.(d), page 3-11, "Generally, applicants establish the design basis in terms of the maximum height to which the cask is lifted outside the spent fuel building, or the maximum deceleration that the cask could experience in a drop." The maximum deceleration for a corner drop is specified as 45g's for the HI-STORM overpack. No carry height limit is specified for the corner drop. | In Chapter 3, the MPC and HI-STORM overpack are evaluated under a 45g radial loading. A 45g axial loading on the MPC is bounded by the analysis presented in the HI-STAR FSAR, Docket 72-1008, under a 60g loading, and is not repeated in this FSAR. In Chapter 3, the HI-STORM overpack is evaluated under a 45g axial loading. Therefore, the HI-STORM overpack and MPC are qualified for a 45g loading as a result of a corner drop. Depending on the *design of the lifting device, the* type of rigging used, the administrative vertical carry height limit, and the stiffness of the impacted surface, site-specific analyses ~~are~~*may be* required to demonstrate that the deceleration limit of 45g's is not exceeded. |
| 3.V.2.b.i.(1), Page 3-19, Para. 1, "All concrete used in storage cask system ISFSIs, and subject to NRC review, should be reinforced..."<br><br>3.V.2.b.i.(2)(b), Page 3-20, Para. 1, "The NRC accepts the use of ACI 349 for the design, material selection and specification, and construction of all reinforced concrete structures that are not addressed within the scope of ACI 359".<br><br>3.V.2.c.i, Page 3-22, Para. 3, "Materials and material properties used for the design and construction of reinforced concrete structures | Exception: The HI-STORM overpack concrete is not reinforced. However, ACI 349 [1.0.4] is used for the material selection and specification, and construction of the plain concrete. Appendix 1.D provides the relevant sections of ACI 349 applicable to the plain concrete in the overpack. ACI 318-95 [1.0.5] is used for the calculation of the compressive strength of the plain concrete. | Concrete is provided in the HI-STORM overpack solely for the purpose of radiation shielding during normal operations. During lifting and handling operations and under certain accident conditions, the compressive strength of the concrete (which is not impaired by the absence of reinforcement) is utilized. However, since the structural reliance under loadings which produce section flexure and tension is entirely on the steel structure of the overpack, reinforcement in the concrete will serve no useful purpose.<br><br>To ensure the quality of the shielding concrete, all relevant provisions of ACI 349 are imposed as ~~specified~~ *clarified* in Appendix 1.D. In addition, the temperature limits for normal and off-normal |

Table 1.0.3 (continued)

HI-STORM 100 SYSTEM FSAR CLARIFICATIONS AND EXCEPTIONS TO NUREG-1536

| NUREG-1536 Requirement | Alternate Method to Meet NUREG-1536 Intent | Justification |
|---|---|---|
| important to safety but not within the scope of ACI 359 should comply with the requirements of ACI 349". | | condition from ACI 349 will be imposed.<br><br>Finally, the Fort St. Vrain ISFSI (Docket No. 72-9) also utilized plain concrete for shielding purposes, which is important to safety. |
| 3.V.3.b.i.(2), Page 3-29, Para. 1, "The NRC accepts the use of ANSI/ANS-57.9 (together with the codes and standards cited therein) as the basic reference for ISFSI structures important to safety that are not designed in accordance with Section III of the ASME B&PV Code." | Clarification: The HI-STORM overpack steel structure is designed in accordance with the ASME B&PV Code, Section III, Subsection NF, Class 3. Any exceptions to the Code are listed in Table 2.2.15. | The overpack structure is a steel weldment consisting of "plate and shell type" members. As such, it is appropriate to design the structure to Section III, Class 3 of Subsection NF. The very same approach has been used in the structural evaluation of the "intermediate shells" in the HI-STAR 100 overpack (Docket Number 72-1008) previously reviewed and approved by the USNRC. |
| 4.IV.5, Page 4-2 "*for each fuel type proposed for storage*, the DCSS should ensure a very low probability (e.g., 0.5 percent per fuel rod) of cladding breach during long-term storage."<br><br>4.IV.1, Page 4-3, Para. 1 "the staff should verify that cladding temperatures *for each fuel type proposed for storage* will be below the expected damage thresholds for normal conditions of storage."<br><br>4.IV.1, Page 4-3, Para. 2 "fuel cladding limits *for each fuel type* should be defined in the SAR with thermal restrictions in the DCSS technical specifications." | Clarification: As described in Section 4.3, all fuel array types authorized for storage have been evaluated for the peak fuel cladding temperature limit. | As described in Section 4.3, all fuel array types authorized for storage have been evaluated for the peak fuel cladding temperature limit. All major variations in fuel parameters are considered in the determination of the peak fuel cladding temperature limits. Minor variations in fuel parameters within an array type are bounded by the conservative determination of the peak fuel cladding temperature limit. |

Table 1.0.3 (continued)

HI-STORM 100 SYSTEM FSAR CLARIFICATIONS AND EXCEPTIONS TO NUREG-1536

| NUREG-1536 Requirement | Alternate Method to Meet NUREG-1536 Intent | Justification |
|---|---|---|
| 4.V.1, Page 4-3, Para. 4 "the applicant should verify that these cladding temperature limits are appropriate *for all fuel types proposed for storage*, and that the fuel cladding temperatures will remain below the limit for facility operations (e.g., fuel transfer) and the worst-case credible accident." | | |
| 4.V.4.a, Page 4-6, Para. 3 "applicants seeking NRC approval of specific internal convection models should propose, in the SAR, a comprehensive test program to demonstrate the adequacy of the cask design and validation of the convection models." | Exception: The natural convection model described in Subsection 4.4.1.~~1.5~~ is based on classical correlations for natural convection in differentially heated cavities which have been validated by many experimental studies. Therefore, no additional test program is proposed. | Many experimental studies of this mechanism have been performed by others and reported in open literature sources. As discussed in Subsection 4.4.1.~~1.5~~, natural convection has been limited to the relatively large MPC basket to shell peripheral gaps. Subsection 4.4.1.~~1.5~~ provides sufficient references to experiments which document the validity of the classical correlation used in the analysis. |
| 4.V.4.a, Page 4-6, Para. 6 "the basket wall temperature of the hottest assembly can then be used to determine the peak rod temperature of the hottest assembly using the Wooten-Epstein correlation." | Clarification: As discussed in Subsection 4.4.2, conservative maximum fuel temperatures are obtained directly from the cask thermal analysis. The peak fuel cladding temperatures are then used to determine the corresponding peak basket wall temperatures using a finite-element based update of Wooten-Epstein (described in Subsection 4.4.1.1.2) | The finite-element based thermal conductivity is greater than a Wooten-Epstein based value. This larger thermal conductivity minimizes the fuel-to-basket temperature difference. Since the basket temperature is less than the fuel temperature, minimizing the temperature *difference* conservatively maximizes the basket wall temperature. |

Table 1.0.3 (continued)

HI-STORM 100 SYSTEM FSAR CLARIFICATIONS AND EXCEPTIONS TO NUREG-1536

| NUREG-1536 Requirement | Alternate Method to Meet NUREG-1536 Intent | Justification |
|---|---|---|
| 4.V.4.b, Page 4-7, Para. 2 "if the thermal model is axisymmetric or three-dimensional, the longitudinal thermal conductivity should generally be limited to the conductivity of the cladding (weighted fractional area) within the fuel assembly." | Clarification: As described in Subsection 4.4.1.1.4, the axial thermal conductivity of the fuel basket is set equal to the cross-sectional thermal conductivity. | Due to the large number of gaps in the cross-sectional heat transfer paths, use of the fuel basket cross-sectional thermal conductivity for the axial thermal conductivity severely underpredicts the axial thermal conductivity of the fuel basket region. This imposed axial thermal conductivity restriction is even more limiting than that imposed by this requirement of NUREG-1536. |
| 4.V.4.b, Page 4-7, Para. 2 "high burnup effects should also be considered in determining the fuel region effective thermal conductivity." | Exception: All calculations of fuel assembly effective thermal conductivities, described in Subsection 4.4.1.1.2, use nominal fuel design dimensions, neglecting wall thinning associated with high burnup. | Within Subsection 4.4.1.1.2, the calculated effective thermal conductivities based on nominal design fuel dimensions are compared with available literature values and are demonstrated to be conservative by a substantial margin. |
| 4.V.4.c, Page 4-7, Para. 5 "a heat balance on the surface of the cask should be given and the results presented." | Clarification: No additional heat balance is performed or provided. | The FLUENT computational fluid dynamics program used to perform evaluations of the HI-STORM Overpack and HI-TRAC transfer cask, which uses a discretized numerical solution algorithm, enforces an energy balance on all discretized volumes throughout the computational domain. This solution method, therefore, ensures a heat balance at the surface of the cask. |

Table 1.0.3 (continued)

HI-STORM 100 SYSTEM FSAR CLARIFICATIONS AND EXCEPTIONS TO NUREG-1536

| NUREG-1536 Requirement | Alternate Method to Meet NUREG-1536 Intent | Justification |
|---|---|---|
| 4.V.5.a, Page 4-8, Para. 2 "the SAR should include input and output file listings for the thermal evaluations." | Exception: No input or output file listings are provided in Chapter 4. | A complete set of computer program input and output files would be in excess of three hundred pages. All computer files are considered proprietary because they provide details of the design and analysis methods. In order to minimize the amount of proprietary information in the FSAR, computer files are provided in the proprietary calculation packages. |
| 4.V.5.c, Page 4-10, Para. 3 "free volume calculations should account for thermal expansion of the cask internal components and the fuel when subjected to accident temperatures. | Exception: All free volume calculations use nominal confinement boundary dimensions, but the volume occupied by the MPC internals (i.e., fuel assemblies, fuel basket, etc.) are calculated using maximum weights and minimum densities. | Calculating the volume occupied by the MPC internals (i.e., fuel assemblies, fuel basket, etc.) using maximum weights and minimum densities conservatively overpredicts the volume occupied by the internal components and correspondingly underpredicts the remaining free volume. |
| 7.V.4.c, Page 7-7, Para. 2 and 3 "Because the leak is assumed to be instantaneous, the plume meandering factor of Regulatory Guide 1.145 is not typically applied." and "Note that for an instantaneous release (and instantaneous exposure), the time that an individual remains at the controlled area boundary is not a factor in the dose calculation." | Exception: As described in Section 7.3, in lieu of an instantaneous release, the assumed leakage rate is set equal to the leakage rate acceptance criteria ($5x10^{-6}$ atm-cm$^3$/s) plus 50% for conservatism, which yields $7.5x10^{-6}$ atm-cm$^3$/s. Because the release is assumed to be a leakage rate, the individual is assumed to be at the controlled area boundary for 720 hours. Additionally, the atmospheric dispersion factors of Regulatory Guide 1.145 are applied. | The MPC uses redundant closures to assure that there is no release of radioactive materials under all credible conditions. Analyses presented in Chapters 3 and 11 demonstrate that the confinement boundary does not degrade under all normal, off-normal, and accident conditions. Multiple inspection methods are used to verify the integrity of the confinement boundary (e.g., helium leakage, hydrostatic, and volumetric weld inspection).<br><br>The NRC letter to Holtec International dated 9/15/97, Subject: Supplemental Request for Additional Information - HI-STAR 100 Dual Purpose Cask System (TAC No. L22019), RAI 7.3 states "use the verified confinement boundary leakage rate in lieu of the assumption that the confinement boundary fails." |

Table 1.0.3 (continued)

HI-STORM 100 SYSTEM FSAR CLARIFICATIONS AND EXCEPTIONS TO NUREG-1536

| NUREG-1536 Requirement | Alternate Method to Meet NUREG-1536 Intent | Justification |
|---|---|---|
| 9.V.1.a, Page 9-4, Para. 4 "Acceptance criteria should be defined in accordance with NB/NC-5330, "Ultrasonic Acceptance Standards"." | Clarification: Section 9.1.1.1 and the Design Drawings specify that the ASME Code, Section III, Subsection NB, Article NB-5332 will be used for the acceptance criteria for the volumetric examination of the MPC lid-to-shell weld. | In accordance with the first line on page 9-4, the NRC endorses the use of "...appropriate acceptance criteria as defined by either the ASME code, or an alternative approach..." The ASME Code, Section III, Subsection NB, Paragraph NB-5332 is appropriate acceptance criteria for pre-service examination. |
| 9.V.1.d, Para. 1 "Tests of the effectiveness of both the gamma and neutron shielding may be required if, for example, the cask contains a poured lead shield or a special neutron absorbing material." | Exception: Subsection 9.1.5 describes the control of special processes, such as neutron shield material installation, to be performed in lieu of scanning or probing with neutron sources. | The dimensional compliance of all shielding cavities is verified by inspection to Design Drawing requirements prior to shield installation.<br><br>The Holtite-A shield material is installed in accordance with written, approved, and qualified special process procedures.<br><br>The composition of the Holtite-A is confirmed by inspection and tests prior to first use.<br><br>Following the first loading for the HI-TRAC transfer cask and each HI-STORM overpack, a shield effectiveness test is performed in accordance with written approved procedures, as specified in Section 9.1. |
| *13.III, " the application must include, at a minimum, a description that satisfies the requirements of 10 CFR Part 72, Subpart G, 'Quality Assurance..."* | *Exception: Section 13.0 incorporates the Holtec International Quality Assurance Program Manual by reference rather than describing the Holtec QA program in detail.* | *The NRC has approved the Holtec Quality Assurance Program Manual under 10 CFR 71 (NRC QA Program Approval for Radioactive Material Packages No. 0784). Pursuant to 10 CFR 72.140(d), Holtec intends to apply this QA program to dry storage cask activities. Incorporating the Holtec QA Program Manual by reference eliminates duplicate documentation.* |

Table 1.0.3 (continued)

HI-STORM 100 SYSTEM FSAR CLARIFICATIONS AND EXCEPTIONS TO NUREG-1536

| NUREG-1536 Requirement | Alternate Method to Meet NUREG-1536 Intent | Justification |
|---|---|---|
| *ISG-15, Section X.5.4.2, "No more than 1% of the rods in an assembly have peak cladding oxide thicknesses greater than 8o micrometers and no more than 3% of the rods in an assembly have peak cladding oxide thicknesses greater than 70 micrometers. A high burnup fuel assembly should be treated as potentially damaged fuel if the assembly does not meet both of the above criteria of if the fuel assembly contains fuel rods with oxide that has become detached or spalled from the cladding* | *The Fuel Cladding Oxide Thickness Evaluation Program in Section 5.0 of Appendix A to the CoC provides an equation to calculate the maximum allowable high burnup fuel cladding oxide thickness, based on fuel assembly type.* | *FSAR Appendix 4.A, Section 4.A.9 provides the justification for this deviation form NUREG-1536 (ISG-15).* |

## 1.1 INTRODUCTION

HI-STORM 100 (acronym for Holtec International Storage and Transfer Operation Reinforced Module) is a spent nuclear fuel storage system designed to be in full compliance with the requirements of 10CFR72. The annex "100" is a model number designation which denotes a system weighing over 100 tons. The HI-STORM 100 System consists of a sealed metallic canister, herein abbreviated as the "MPC", contained within an overpack. Its design features are intended to simplify and reduce on-site SNF loading, handling, and monitoring operations, and to provide for radiological protection and maintenance of structural and thermal safety margins.

*The HI-STORM 100S overpack is a variant of the HI-STORM 100 overpack and has its own set of design drawings in Section 1.5. The "S" suffix indicates an enhanced overpack design, as described later in this section. The HI-STORM 100S accepts the same MPCs and fuel types as the HI-STORM 100 and the basic structural, shielding, and thermal-hydraulic characteristics remain unchanged. Hereafter in this FSAR reference to HI-STORM 100 System or the HI-STORM 100 overpack is construed to apply to both the HI-STORM 100 and the HI-STORM 100S. Where necessary, the text distinguishes between the two overpack designs. See Figures 1.1.1A and 1.1.3A for a pictorial view of the HI-STORM 100S design.*

*The HI-STORM 100A overpack is a third variant of the HI-STORM 100 family and is specially outfitted with an extended baseplate and gussets to enable the overpack to be anchored to the ISFSI pad in high seismic applications. In the following, the modified structure on the HI-STORM 100A, in each of four quadrants, is denoted as a "sector lug." The HI-STORM 100A design is also applicable to the HI-STORM 100S overpack, in which case the assembly would be named HI-STORM 100SA. Hereafter in the text, discussion of HI-STORM 100A applies to both the standard (HI-STORM 100A) and short (HI-STORM 100SA) overpacks, unless otherwise clarified.*

The HI-STORM 100 System is designed to accommodate a wide variety of spent nuclear fuel assemblies in a single overpack design by utilizing different MPCs. The external dimensions of all MPCs are identical to allow the use of a single overpack. Each of the MPCs has different internals (baskets) to accommodate distinct fuel characteristics. Each MPC is identified by the maximum quantity of fuel assemblies it is capable of receiving. The MPC-24, *MPC-24E, and MPC-24EF* contain~~s~~ a maximum of 24 PWR fuel assemblies*; the MPC-32 contains a maximum of 32 PWR fuel assemblies;* and the MPC-68, *MPC-68F, and MPC-68FF* contain~~s~~ a maximum of 68 BWR fuel assemblies.

The HI-STORM 100 overpack is constructed from a combination of steel and concrete, both of which are materials with long, proven histories of usage in nuclear applications. HI-STORM 100 incorporates and combines many desirable features of previously-approved concrete and metal module designs. In essence, the HI-STORM 100 overpack is a hybrid of metal and concrete systems, with the design objective of

emulating the best features and dispensing with the drawbacks of both. The HI-STORM overpack is best referred to as a METCON™ (metal/concrete composite) system.

Figures 1.1.1 *and 1.1.1.A* shows the HI-STORM 100 with two of its major constituents, the MPC and the storage overpack, in a cut-away view. The MPC, shown partially withdrawn from the storage overpack, is an integrally welded pressure vessel designed to meet the stress limits of the ASME Boiler and Pressure Vessel Code, Section III, Subsection NB [1.1.1]. The MPC defines the confinement boundary for the stored spent nuclear fuel assemblies with respect to 10CFR72 requirements and attendant review considerations. The HI-STORM 100 storage overpack provides mechanical protection, cooling, and radiological shielding for the contained MPC.

In essence, the HI-STORM 100 System is the storage-only counterpart of the HI-STAR 100 System (Docket Numbers 72-1008 (Ref. [1.1.2]) and 71-9261 (Ref. [1.1.3])). Both HI-STORM and HI-STAR are engineered to house identical MPCs. Since the MPC is designed to meet the requirements of both 10CFR71 and 10CFR72 for transportation and storage, respectively, the HI-STORM 100 System allows rapid decommissioning of the ISFSI by simply transferring the loaded MPC's directly into HI-STAR 100 overpacks for off-site transport. This alleviates the additional fuel handling steps required by storage-only casks to unload the cask and repackage the fuel into a suitable transportation cask.

In contrast to the HI-STAR 100 overpack, which provides a containment boundary for the SNF during transport, the HI-STORM 100 storage overpack does not constitute a containment or confinement enclosure. The HI-STORM 100 overpack is equipped with large penetrations near its lower and upper extremities to permit natural circulation of air to provide for the passive cooling of the MPC and the contained radioactive material. The HI-STORM is engineered to be an effective barrier against the radiation emitted by the stored materials, and an efficiently configured metal/concrete composite to attenuate the loads transmitted to the MPC during a natural phenomena or hypothetical accident event. Other auxiliary functions of the HI-STORM 100 overpack include isolation of the SNF from abnormal environmental or man-made events, such as impact of a tornado borne missile. As the subsequent chapters of this FSAR demonstrate, the HI-STORM overpack is engineered with large margins of safety with respect to cooling, shielding, and mechanical/structural functions.

The HI-STORM 100 System is autonomous inasmuch as it provides SNF and radioactive material confinement, radiation shielding, criticality control and passive heat removal independent of any other facility, structures, or components. The surveillance and maintenance required by the plant's staff is minimized by the HI-STORM 100 System since it is completely passive and is composed of materials with long proven histories in the nuclear industry. The HI-STORM 100 System can be used either singly or as the basic storage module in an ISFSI. The site for an ISFSI can be located either at a reactor or away from a reactor.

The information presented in this report is intended to demonstrate the acceptability of the HI-STORM 100 System for use under the general license provisions of Subpart K by meeting the criteria set forth in 10CFR72.236.

The modularity of the HI-STORM 100 System accrues several advantages. Different MPCs, identical in exterior dimensions, manufacturing requirements, and handling features, but different in their SNF arrangement details, are designed to fit a common overpack. Even though the different MPCs have fundamentally identical design and manufacturing attributes, qualification of HI-STORM 100 requires consideration of the variations in the characteristics of the MPCs. In most cases, however, it is possible to identify the most limiting MPC geometry and the specific loading condition for the safety evaluation, and the detailed analyses are then carried out for that bounding condition. In those cases where this is not possible, multiple parallel analyses are performed.

The HI-STORM overpack is not engineered for transport and, therefore, will not be submitted for 10CFR Part 71 certification. HI-STORM 100, however, is designed to possess certain key elements of flexibility.

For example:

- The HI-STORM 100 overpack is stored at the ISFSI pad in a vertical orientation which helps minimize the size of the ISFSI and leads to an effective natural convection cooling flow around the MPC.

- The HI-STORM 100 overpack can be loaded with a loaded MPC using the HI-TRAC transfer cask inside the 10CFR50 [1.1.4] facility, prepared for storage, transferred to the ISFSI, and stored in a vertical configuration, or directly loaded using the HI-TRAC transfer cask at *or nearby* the ISFSI storage pad.

*The version of the HI-STORM overpack equipped with sector lugs to anchor it to the ISFSI pad is labeled HI-STORM 100A, shown in Figure 1.1.4. Figure 1.1.5 shows the sector lugs and anchors used to fasten the overpack to the pad in closer view. Complete design details on HI-STORM 100A are presented in the design drawing and BOM contained in Section 1.5. Users may employ a double nut arrangement as an option. The HI-STORM 100A overpack will be deployed at those ISFSI sites where the postulated seismic event (defined by the three orthogonal ZPAs) exceeds the maximum limit permitted for free-standing installation. The design of the ISFSI pad and the embedment are necessarily site-specific and the responsibility of the ISFSI owner. These designs shall be in accordance with the requirements specified in Appendix 2.A. The jurisdictional boundary between the anchored cask design and the embedment design is defined in Table 2.0.5. Additional description on the HI-STORM 100A configuration is provided in Subsection 1.2.1.2.1.*

The MPC is a multi-purpose SNF storage device both with respect to the type of fuel assemblies and its versatility of use. The MPC is engineered as a cylindrical prismatic structure with square cross section storage cavities. The number of storage locations depends on the type of fuel. Regardless of the storage cell count, the construction of the MPC is fundamentally the same; it is built as a honeycomb of cellular elements positioned within a circumscribing cylindrical canister shell. The manner of cell-to-cell weld-up and cell-to-canister shell interface employed in the MPC imparts extremely high structural stiffness to the assemblage, which is an important attribute for

mechanical accident events. Figure 1.1.2 shows an elevation cross section of a MPC.

The MPC is identical to those presented in References [1.1.2] and [1.1.3], *except for MPC-24, 24E, 24EF, 32, and 68FF, until such time as those CoCs are amended to include these additional MPC models*. Referencing these ~~*submittals*~~ *documents, as applicable,* avoids repetition of information on the MPCs which is comprehensively set forth in the above-mentioned Holtec International ~~*applications*~~ *documents* docketed with the NRC. However, sufficient information and drawings are presented in this report to maintain clarity of exposition of technical data.

The HI-STORM 100 storage overpack is designed to provide the necessary neutron and gamma shielding to comply with the provisions of 10CFR72 for dry storage of SNF at an ISFSI. A cross sectional view of the HI-STORM 100 storage overpack is presented in Figure 1.1.3. A HI-TRAC transfer cask is required for loading of the MPC and movement of the loaded MPC from the cask loading area of a nuclear plant spent fuel pool to the storage overpack. The HI-TRAC is engineered to be emplaced with an empty MPC into the cask loading area of nuclear plant spent fuel pools for fuel loading (or unloading). The HI-TRAC/MPC assembly is designed to preclude intrusion of pool water into the narrow annular space between the HI-TRAC and the MPC while the assembly is submerged in the pool water. The HI-TRAC transfer cask also allows dry loading (or unloading) of SNF into the MPC.

To summarize, the HI-STORM 100 System has been engineered to:

- minimize handling of the SNF;
- provide shielding and physical protection for the MPC;
- permit rapid and unencumbered decommissioning of the ISFSI;
- require minimal ongoing surveillance and maintenance by plant staff;
- minimize dose to operators during loading and handling;
- allow transfer of the loaded MPC to a HI-STAR overpack for transportation.

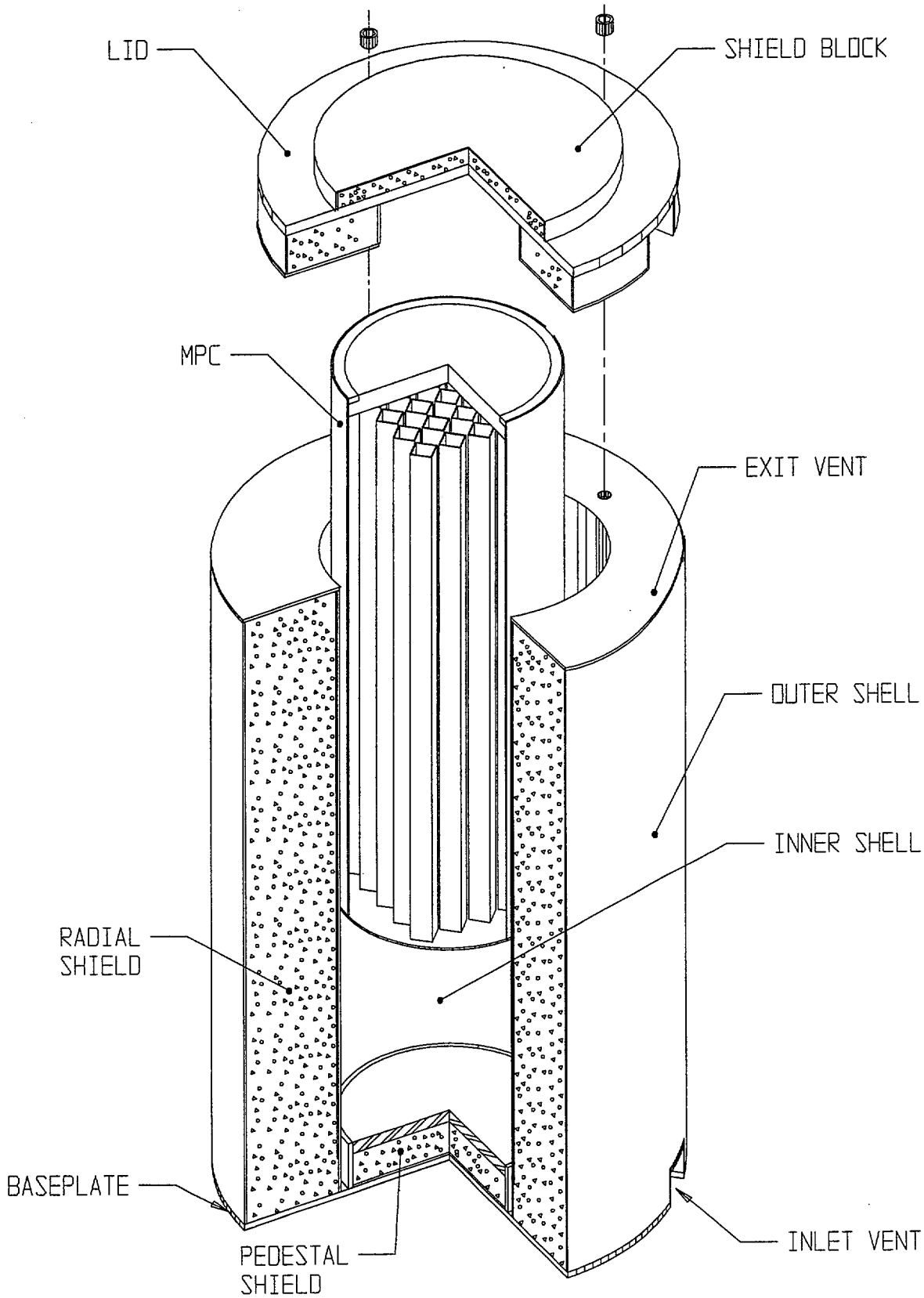


**FIGURE 1.1.1A; HI-STORM 100S OVERPACK WITH MPC PARTIALLY INSERTED**

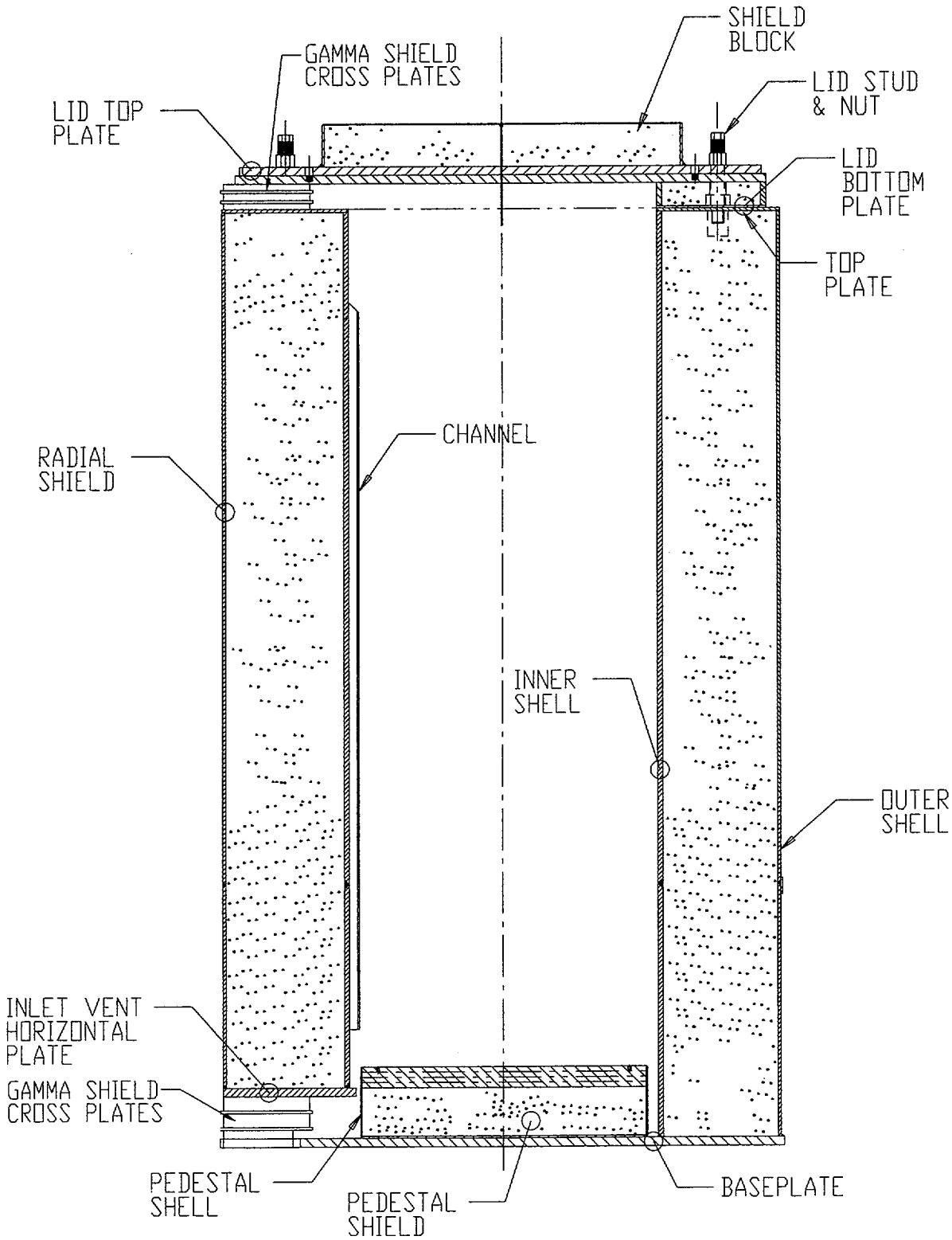


FIGURE 1.1.3A; HI-STORM 100S OVERPACK CROSS SECTIONAL ELEVATION VIEW

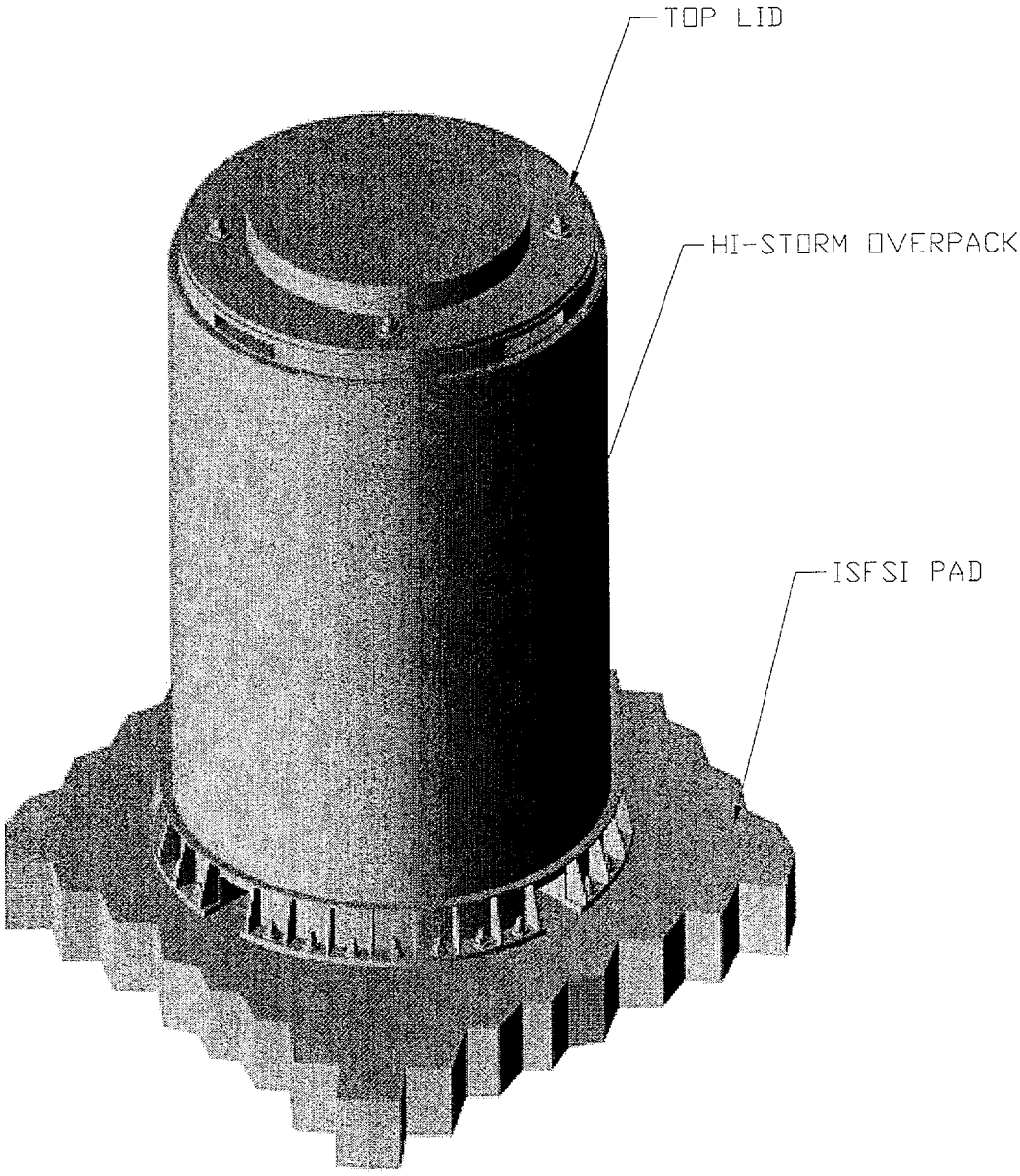


**FIGURE 1.1.4; A PICTORAL VIEW OF THE HI-STORM 100A OVERPACK (100SA MODEL SHOWN)**

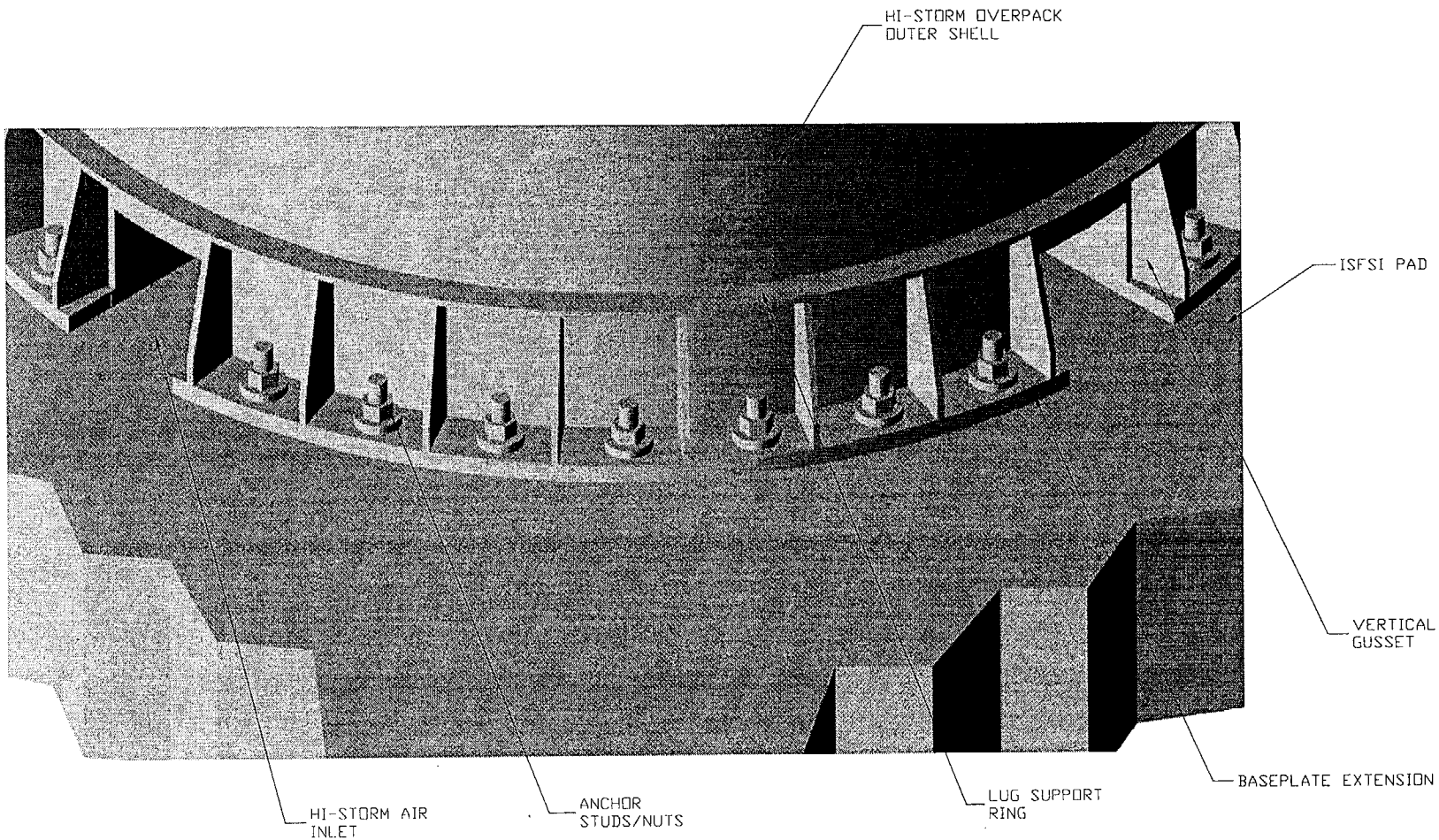


**FIGURE 1.1.5; ANCHORING DETAIL FOR THE HI-STORM 100A AND 100SA OVERPACKS**

## 1.2 GENERAL DESCRIPTION OF HI-STORM 100 System

### 1.2.1 System Characteristics

The basic HI-STORM 100 System consists of interchangeable MPCs providing a confinement boundary for BWR or PWR spent nuclear fuel, a storage overpack providing a structural and radiological boundary for long-term storage of the MPC placed inside it, and a transfer cask providing a structural and radiological boundary for transfer of a loaded MPC from a nuclear plant spent fuel storage pool to the storage overpack. Figure 1.2.1 provides a cross sectional view of the HI-STORM 100 System with an MPC inserted into a storage overpack. *Figure 1.2.1A provides a cross sectional view of the HI-STORM 100S System with an MPC inserted into a storage overpack.* Each of these components is described below, including information with respect to component fabrication techniques and designed safety features. All structures, systems, and components of the HI-STORM 100 System which are identified as Important to Safety are specified in Table 2.2.6. This discussion is supplemented with a full set of detailed design drawings in Section 1.5.

The HI-STORM 100 System is comprised of three discrete components:

i. multi-purpose canister (MPC)
ii. storage overpack (HI-STORM)
iii. transfer cask (HI-TRAC)

Necessary auxiliaries required to deploy the HI-STORM 100 System for storage are:

i. vacuum drying *(or other moisture removal)* system
ii. helium (He) backfill system with leakage detector
iii. lifting and handling systems
iv welding equipment
v. transfer vehicles/trailer

All MPCs have identical exterior dimensions ~~which~~ *that* render them interchangeable. The outer diameter of the MPC is 68-3/8 inches[†] and the overall length is 190-1/2 inches. See Section 1.5 for the detailed design drawings. Due to the differing storage contents of each MPC, the maximum loaded weight differs ~~between~~ *among* MPCs. See Table 3.2.1 for each MPC weight. However, the maximum weight of a loaded MPC is approximately 44-1/2 tons. Tables 1.2.1 and 1.2.2 contain the key parameters for the MPCs.

A single, *base* HI-STORM overpack design is provided which is capable of storing each type of MPC. The overpack inner cavity is sized to accommodate the MPCs. The inner diameter of the overpack inner shell is 73-1/2 inches and the height of the cavity is 191-1/2 inches. The overpack

[†] *Dimensions discussed in this section are considered nominal values.*

inner shell is provided with channels distributed around the inner cavity to present an inside diameter of 69-1/2 inches. The channels are intended to offer a flexible medium to absorb some of the impact during a non-mechanistic tip-over, while still allowing the cooling air flow through the ventilated overpack. The outer diameter of the overpack is 132-1/2 inches. ~~and~~ The overall height *of the HI-STORM 100 and the HI-STORM 100S* is 239-1/2 inches *and 232 inches,~~,~~ respectively*. See Section 1.5 for the detailed design drawings. The weight of the overpack without an MPC is approximately 135 tons. See Table 3.2.1 for the detailed weights.

Before proceeding to present detailed physical data on the HI-STORM 100 System, it is of contextual importance to summarize the design attributes which enhance the performance and safety of the system. Some of the principal features of the HI-STORM 100 System which enhance its effectiveness as an SNF storage device and a safe SNF confinement structure are:

- the honeycomb design of the MPC fuel basket;
- the effective distribution of neutron and gamma shielding materials within the system;
- the high heat dissipation capability;
- engineered features to promote convective heat transfer;
- the structural robustness of the steel-concrete-steel overpack construction.

The honeycomb design of the MPC fuel baskets renders the basket into a multi-flange plate weldment where all structural elements (i.e., box walls) are arrayed in two orthogonal sets of plates. Consequently, the walls of the cells are either completely co-planar (i.e., no offset) or orthogonal with each other. There is complete edge-to-edge continuity between the contiguous cells.

Among the many benefits of the honeycomb construction is the uniform distribution of the metal mass of the basket over the entire length of the basket. Physical reasoning suggests that a uniformly distributed mass provides a more effective shielding barrier than can be obtained from a nonuniform basket. In other words, the honeycomb basket is a most effective radiation attenuation device. The complete cell-to-cell connectivity inherent in the honeycomb basket structure provides an uninterrupted heat transmission path, making the MPC an effective heat rejection device.

The composite shell construction in the overpack, steel-concrete-steel, allows ease of fabrication and eliminates the need for the sole reliance on the strength of concrete.

A description of each of the components is provided in the following sections, along with information with respect to its fabrication and safety features. This discussion is supplemented with the full set of Design Drawings and Bills-of-Material in Section 1.5.

1.2.1.1 Multi-Purpose Canisters

The MPCs are welded cylindrical structures as shown in cross sectional views of Figures 1.2.2 ~~and 1.2.4~~ *through 1.2.4.A*. The outer diameter and cylindrical height of each MPC are fixed. Each spent fuel MPC is an assembly consisting of a honeycombed fuel basket, a baseplate, canister shell, a lid, and a closure ring, as depicted in the MPC cross section elevation view, Figure 1.2.5. The number of spent nuclear fuel storage locations in each of the MPCs depends on the fuel assembly characteristics.

There are ~~three~~ *seven* MPC models, distinguished by the type and number of fuel assemblies authorized for loading. The MPC-24 is designed to store up to 24 intact PWR fuel assemblies. *The MPC-24E is designed to store up to 24 total PWR fuel assemblies including up to four (4) damaged PWR fuel assemblies. The MPC-24EF is designed to store up to 24 total PWR fuel assemblies including up to four (4) damaged PWR fuel assemblies or fuel classified as fuel debris.* The MPC-68 is designed to store up to 68 ~~intact~~ *total BWR fuel assemblies including up to 68* damaged *Dresden Unit 1 or Humboldt Bay* BWR fuel assemblies. *Damaged BWR fuel assemblies other than Dresden Unit 1 and Humboldt Bay are limited to 16 fuel storage locations in the MPC-68 with the remainder being intact BWR fuel assemblies, up to a total of 68.* The MPC-68F is designed to store up to 68 intact or damaged *Dresden Unit 1 and Humboldt Bay* BWR fuel assemblies. ~~and~~ *U*p to four *of the 68 fuel storage locations in the MPC-68F may be Dresden Unit 1 and Humboldt Bay* BWR fuel assemblies classified as fuel debris. *The MPC-68FF is designed to store up to 68 total BWR fuel assemblies including up to 16 damaged BWR fuel assemblies. Up to eight (8) of the 16 BWR damaged fuel assembly storage locations may be filled with BWR fuel classified as fuel debris. In addition, all fuel loading combinations permitted in the MPC-68F are also permitted in the MPC-68FF.* Design Drawings for all of the MPCs are provided in Section 1.5.

The MPC provides the confinement boundary for the stored fuel. Figure 1.2.6 provides an elevation view of the MPC confinement boundary. The confinement boundary is defined by the MPC baseplate, shell, lid, port covers, and closure ring. The confinement boundary is a ~~seal-~~*strength*-welded enclosure of all stainless steel construction.

The ~~*construction features of the*~~ PWR MPC-24, *MPC-24E* and ~~*the BWR MPC-68 are similar. However, the PWR MPC-24 canister in Figure 1.2.4, which is designed for high-enriched PWR fuel,*~~ *MPC-24EF* differ~~s~~ in construction from the *MPC-32 and the* MPC-68 *(including the MPC-68F and MPC-68FF)* in one important aspect: the fuel storage cells are physically separated from one another by a "flux trap", for criticality control. *The PWR MPC-32 is designed similar to the MPC-68 (without flux traps) and its design includes credit for soluble boron in the MPC water during wet fuel loading and unloading operations for criticality control.* ~~All MPC baskets are formed from an array of plates welded to each other, such that a honeycomb structure is created which resembles a multiflanged, closed-section beam in its structural characteristics.~~

*The MPC fuel baskets of non-flux trap construction (namely, MPC-68, MPC-68F, MPC-68FF, and MPC-32) are formed from an array of plates welded to each other at their intersections. In the flux-trap type fuel baskets (MPC-24, MPC-24E, and MPC-24EF), formed angles are interposed onto the*

*orthogonally configured plate assemblage to create the required flux-trap channels (see MPC-24 and MPC-24E design drawings in Section 1.5). In both configurations, two key attributes of the basket (described in U.S. Patent No. 5,897,747, assigned to Holtec International) are preserved:*

*i. The cross section of the fuel basket simulates a multi-flanged closed section beam, resulting in extremely high bending rigidity.*

*ii. The principal structural frame of the basket consists of co-planar plate-type members (i.e., no offset).*

*This structural feature eliminates the source of severe bending stresses in the basket structure by eliminating the offset between the cell walls that must transfer the inertia load of the stored SNF to the basket/MPC interface during the various postulated accident events (e.g., non-mechanistic tipover, uncontrolled lowering of a cask during on-site transfer, or off-site transport events, etc.).*

The MPC fuel basket is positioned and supported within the MPC shell by a set of basket supports welded to the inside of the MPC shell. Between the periphery of the basket, the MPC shell, and the basket supports, *optional* heat conduction elements ~~are~~*may be* installed. These heat conduction elements are fabricated from thin aluminum alloy 1100 in shapes *and a design* which ~~*enable*~~ *allows* a snug fit in the confined spaces and ease of installation. *If used,* ~~T~~the heat conduction elements are installed along the full length of the MPC basket *except at the drain pipe location* to create a nonstructural thermal connection which facilitates heat transfer from the basket to shell. In their ~~*installed*~~ *operating* condition, the heat conduction elements contact the MPC shell and basket walls.

Lifting lugs attached to the inside surface of the MPC canister shell serve to permit placement of the empty MPC into the HI-TRAC transfer cask. The lifting lugs also serve to axially locate the MPC lid prior to welding. These internal lifting lugs are not used to handle a loaded MPC. Since the MPC lid is installed prior to any handling of a loaded MPC, there is no access to the lifting lugs once the MPC is loaded.

The top end of the MPC incorporates a redundant closure system. Figure 1.2.6 shows the MPC closure details. The MPC lid is a circular plate edge-welded to the MPC outer shell. This plate is equipped with vent and drain ports ~~which~~ *that* are utilized to remove moisture and air from the MPC, and backfill the MPC with a specified ~~*mass*~~ *amount* of inert gas (helium). The vent and drain ports are covered and seal welded before the closure ring is installed. The closure ring is a circular ring edge-welded to the MPC shell and lid. The MPC lid provides sufficient rigidity to allow the entire MPC loaded with SNF to be lifted by threaded holes in the MPC lid.

To maintain a constant exterior axial length between the *PWR MPCs* ~~*MPC-24*~~ and *the BWR MPCs* ~~*MPC-68*~~, the thickness of the *PWR MPCs'* ~~*MPC-24*~~ lid is ½ inch thinner than the MPC-68s' lid to accommodate the longest PWR fuel assembly which is approximately a ½ inch longer than the longest BWR fuel assembly. For fuel assemblies that are shorter than the design basis length, upper and lower fuel spacers (as appropriate) maintain the axial position of the fuel

assembly within the MPC basket. The upper fuel spacers are threaded into the underside of the MPC lid as shown in Figure 1.2.5. The lower fuel spacers are placed in the bottom of each fuel basket cell. The upper and lower fuel spacers are designed to withstand normal, off-normal, and accident conditions of storage. An axial clearance of approximately 2 inches is provided to account for the irradiation and thermal growth of the fuel assemblies. The *suggested values for the* upper and lower fuel spacer lengths are listed in Tables 2.1.9 and 2.1.10 for each fuel assembly type. *The actual length of fuel spacers will be determined on a site-specific or fuel assembly-specific basis.*

The MPC is constructed entirely from stainless steel alloy materials (except for the neutron absorber and aluminum heat conduction elements). No carbon steel parts are permitted in the MPC. Concerns regarding interaction of coated carbon steel materials and various MPC operating environments [1.2.1] are not applicable to the MPC. All structural components in a MPC shall be made of Alloy X, a designation which warrants further explanation.

Alloy X is a material ~~which~~ *that* is expected to be acceptable as a Mined Geological Disposal System (MGDS) waste package and which meets the thermophysical properties set forth in this document.

At this time, there is considerable uncertainty with respect to the material of construction for an MPC ~~which~~ *that* would be acceptable as a waste package for the MGDS. Candidate materials being considered for acceptability by the DOE include:

- Type 316
- Type 316LN
- Type 304
- Type 304LN

The DOE material selection process is primarily driven by corrosion resistance in the potential environment of the MGDS. As the decision regarding a suitable material to meet disposal requirements is not imminent, this application requests approval for use of any one of the four Alloy X materials.

For the MPC design and analysis, Alloy X (as defined in this application) may be one of the following materials. ~~(o~~*O*nly a single alloy from the list of acceptable Alloy X materials may be used in the fabrication of a single MPC *basket or shell - the basket and shell may be of different alloys in the same MPC.*

- Type 316
- Type 316LN
- Type 304
- Type 304LN

The Alloy X approach is accomplished by qualifying the MPC for all mechanical, structural, neutronic, radiological, and thermal conditions using material thermophysical properties which are the least favorable for the entire group for the analysis in question. For example, when calculating the rate of heat rejection to the outside environment, the value of thermal conductivity used is the lowest for the candidate material group. Similarly, the stress analysis calculations use the lowest value of the ASME Code allowable stress intensity for the entire group. Stated differently, we have defined a material, which is referred to as Alloy X, whose thermophysical properties, from the MPC design perspective, are the least favorable of the candidate materials.

The evaluation of the Alloy X constituents to determine the least favorable properties is provided in Appendix 1.A.

Other alloy materials which are identified to be more suitable by the DOE for the MGDS in the future and which are also bounded by the Alloy X properties set forth in Appendix 1.A can be used in the MPC after an amendment to this FSAR is approved.

The Alloy X approach is conservative because no matter which material is ultimately utilized in the MPC construction, the Alloy X approach guarantees that the performance of the MPC will exceed the analytical predictions contained in this document.

### 1.2.1.2 Overpacks

#### 1.2.1.2.1 HI-STORM 100 Overpack (Storage)

The HI-STORM 100 *and 100S* overpacks ~~is a~~ *are* rugged, heavy-walled cylindrical vessels. Figures 1.2.7, ~~and~~ 1.2.8, *and 1.2.8.A* provide cross sectional views of the HI-STORM 100 System, *including both of the overpack designs. The HI-STORM 100A is an anchored variant of the same structure and hereinafter is identified by name only when the discussion specifically applies to the anchored overpack. The HI-STORM 100A differs only in the diameter of the overpack baseplate and the presence of bolt holes and associated anchorage hardware (see Figures 1.1.4 and 1.1.5).* The main structural function of the storage overpack is provided by carbon steel, and the main shielding function is provided by plain concrete. The overpack plain concrete is enclosed by cylindrical steel shells, a thick steel baseplate, and a top plate. The overpack lid has appropriate concrete shielding ~~attached to its underside and top~~ to provide neutron and gamma attenuation in the vertical direction.

The storage overpack provides an internal cylindrical cavity of sufficient height and diameter for housing an MPC. The inner shell of the overpack has channels attached to its inner diameter. The channels provide guidance for MPC insertion and removal and a flexible medium to absorb impact loads during the non-mechanistic tip-over, while still allowing the cooling air flow to circulate through the overpack. Stainless steel shims are attached to channels to allow the proper inner diameter dimension to be obtained and to provide a guiding surface for MPC insertion and removal.

The storage ~~overpack~~ *system* has air ducts to allow for passive natural convection cooling of the contained MPC. Four air inlets and four air outlets are located at the lower and upper extremities of the ~~overpack~~*storage system*, respectively. *The location of the air outlets in the HI-STORM 100 and the HI-STORM 100S design differ in that the outlet ducts for the HI-STORM 100 overpack are located in the overpack body and are aligned vertically with the inlet ducts at the bottom of the overpack body. The air outlet ducts in the HI-STORM 100S are integral to the lid assembly and are not in vertical alignment with the inlet ducts. The location of the air inlet ducts is same for both the HI-STORM 100 and the HI-STORM 100S.* The air inlets and outlets are covered by a fine mesh screen to reduce the potential for blockage. Routine inspection of the screens (or, alternatively, temperature monitoring) ensures that blockage of the screens themselves will be detected and removed in a timely manner. Analysis, ~~provided~~ *described* in *Chapter 11 of* this FSAR, evaluates the effects of partial and complete blockage of the air ducts.

The four air inlets and four air outlets are penetrations through the thick concrete shielding provided by the HI-STORM *100* overpack. *The outlet air ducts for the HI-STORM 100S overpack, integral to the lid, present a similar break in radial shielding.* Within the air inlets and outlets, an array of gamma shield cross plates are installed *(see Figure 5.3.19 for a pictorial representation of the gamma shield cross plate designs)*. These gamma shield cross plates are designed to scatter any particles traveling through the ducts. The result of scattering the particles in the ducts is a significant decrease in the local dose rates around the four air inlets and four air outlets. The configuration of the gamma shield cross plates is such that the increase in the resistance to flow in the air inlets and outlets is minimized. *The shielding analysis conservatively credits only the mandatory version of the gamma shield cross plate design because they provide less shielding than the optional design. Conversely, the thermal analysis conservatively evaluates the optional gamma shield cross plate design because it provides greater resistance to flow than the mandatory design.*

Four threaded anchor blocks at the top of the overpack are provided for lifting. The anchor blocks are integrally welded to the radial plates which in turn are full-length welded to the overpack inner shell, outer shell, and baseplate *(HI-STORM 100) or the inlet sir duct horizontal plates (HI-STORM 100S)* (see Figure 1.2.7). The four anchor blocks are located on 90° ~~centers~~*arcs around the circumference of the overpack.* The overpack may also be lifted from the bottom using specially-designed lifting transport devices, including hydraulic jacks, air pads, ~~and~~ Hillman rollers*, or other design based on site-specific needs and capabilities*. Slings or other suitable devices mate with lifting lugs ~~which~~ *that* are inserted into threaded holes in the top surface of the overpack lid to allow lifting of the overpack lid. After the lid is bolted to the storage overpack main body, these lifting bolts shall be removed and replaced with flush plugs.

The plain concrete between the overpack inner and outer steel shells is specified to provide the necessary shielding properties and compressive strength. The concrete shall be in accordance with the requirements specified in Appendix 1.D.

The principal function of the concrete is to provide shielding against gamma and neutron radiation. However, in an implicit manner it helps enhance the performance of the HI-STORM overpack in other respects as well. For example, the massive bulk of concrete imparts a large thermal inertia to the HI-STORM overpack, allowing it to moderate the rise in temperature of the system under hypothetical conditions when all ventilation passages are assumed to be blocked. The case of a postulated fire accident at the ISFSI is another example where the high thermal inertia characteristics of the HI-STORM concrete control the temperature of the MPC. Although the annular concrete mass in the overpack shell is not a structural member, it does act as an elastic/plastic filler of the inter-shell space, such that, while its cracking and crushing under a tip-over accident is not of significant consequence, its deformation characteristics are germane to the analysis of the structural members.

Density and compressive strength are the key parameters which delineate the performance of concrete in the HI-STORM System. The density of concrete used in the inter-shell annulus, pedestal, and HI-STORM lid has been set as defined in Appendix 1.D. For evaluating the physical properties of concrete for completing the analytical models, conservative formulations of Reference [1.*20*.~~6~~*5*] are used.

To ensure the stability of the concrete at temperature, the concrete composition has been specified in accordance with NUREG-1536, "Standard Review Plan for Dry Cask Storage Systems" [1.*0*~~2~~.~~1~~*03*]. Thermal analyses, presented in Chapter 4, show that the temperatures during normal storage conditions do not threaten the physical integrity of the HI-STORM overpack concrete.

*There are two base HI-STORM overpack designs. The significant differences between the two are overpack height, MPC pedestal height, location of the air outlet ducts, and the vertical alignment of the inlet and outlet air ducts. The HI-STORM 100 overpack is approximately 240 inches high from the bottom of the baseplate to the top of the lid bolts and 227 inches high without the lid installed. The HI-STORM 100S is approximately 232 inches from the bottom of the baseplate to the top of the lid bolts in its final storage configuration. However, the HI-STORM 100S design includes an optional temporary top closure plate and bolts as ancillary equipment for use in moving the loaded overpack out of the Part 50 facility through existing, lower clearance doorways. In this temporary configuration the HI-STORM 100S overpack is approximately 215 inches high.*

*Once outside, the permanent HI-STORM 100S overpack lid is installed using the permanent bolts to provide the final storage configuration. Users who require even more clearance based on their plant-specific configuration may move the loaded HI-STORM 100S overpack into or out of the Part 50 facility with neither the temporary nor the permanent lid installed. Before moving the overpack to the ISFSI, the permanent lid should be installed as soon as practicable after the loaded overpack leaves the Part 50 facility. This, and other administrative controls for moving the loaded overpack without the permanent lid installed are detailed in Section 8.1.1.2 of this FSAR.*

*The anchored embodiment of the HI-STORM overpack is referred to as HI-STORM 100A. As explained in the foregoing, the HI-STORM overpack is a steel weldment, which makes it a relatively simple matter to extend the overpack baseplate, form lugs, and then anchor the cask to the reinforced concrete structure of the ISFSI. In the HI-STORM terminology, these lugs are referred too as "sector lugs". The sector lugs, as shown in Figure 1.1.5 and the design drawing in Section 1.5, are formed by extending the HI-STORM overpack baseplate, welding vertical gussets to the baseplate extension and to the overpack outer shell and, finally, welding a horizontal lug support ring in the form of an annular sector to the vertical gussets and to the outer shell. The baseplate is equipped with regularly spaced clearance holes (round or slotted) through which the anchor studs can pass. The sector lugs are bolted to the ISFSI pad using anchor studs that are made of a creep-resistant, high-ductility, environmentally compatible material. The bolts are pre-loaded to a precise axial stress using a "stud tensioner" rather than a torque wrench. Pre-tensioning the anchors using a stud tensioner eliminates any shear stress in the bolt, which is unavoidable if a torquing device is employed (Chapter 3 of the text "Mechanical Design of Heat Exchangers and Pressure Vessel Components", by Arcturus Publishers, 1984, K.P. Singh and A.I. Soler, provides additional information on stud tensioners). The axial stress in the anchors induced by pre-tensioning is kept below 75% of the material yield stress, such that during the seismic event the maximum bolt axial stress remains below the limit prescribed for bolts in the ASME Code, Section III, Subsection NF (for Level D conditions). Figures 1.1.4 and 1.1.5 provide visual depictions of the anchored HI-STORM 100A configuration. This configuration also applies to the HI-STORM 100SA.*

*The anchor studs pass through liberal clearance holes (circular or slotted) in the sector lugs (0.75" minimum clearance) such that the fastening of the studs to the ISFSI pad can be carried out without mechanical interference from the body of the sector lug. The two clearance hole configurations give the ISFSI pad designer flexibility in the design of the anchor embedment in the ISFSI concrete. The axial force in the anchors produces a compressive load at the overpack/pad interface. This compressive force, F, imputes a lateral load bearing capacity to the cask/pad interface that is equal to $\mu F$ ($\mu \leq 0.53$ per Table 2.2.8). As is shown in Chapter 3 of this FSAR, the lateral load-bearing capacity of the HI-STORM/pad interface ($\mu F$) is many times greater than the horizontal (sliding) force exerted on the cask under the postulated DBE seismic event. Thus, the potential for lateral sliding of the HI-STORM 100A System during a seismic event is preecluded, as is the potential for any bending action on the anchor studs.*

*The seismic loads, however, will produce an overturning moment on the overpack that would cause a redistribution of the compressive contact pressure between the pad and the overpack. To determine the pulsation in the tensile load in the anchor studs and in the interface contact pressure, bounding static analysis of the preloaded configuration has been performed. The results of the static analysis demonstrate that the initial preloading minimizes pulsations in the stud load. A confirmatory non-linear dynamic analysis has also been performed using the time-history methodology described in Chapter 3, wherein the principal nonlinearities in the cask system are incorporated and addressed. The calculated results from the dynamic analysis confirm the static analysis results and that the presence of pre-stress helps minimize the pulsation in the anchor stud stress levels during the seismic event, thus eliminating any concern with regard to fatigue failure under extended and repetitive seismic excitations.*

*The sector lugs in HI-STORM 100A are made of the same steel material as the baseplate and the shell (SA516- Gr. 70) which helps ensure high quality fillet welds used to join the lugs to the body of the overpack. The material for the anchor studs can be selected from a family of allowable stud materials listed in the ASME Code (Section II). A representative sampling of permitted materials is listed in Table 1.2.7. The menu of materials will enable the ISFSI owner to select a fastener material that is resistant to corrosion in the local ISFSI environment. For example, for ISFSIs located in marine environments (e.g., coastal reactor sites), carbon steel studs would not be recommended without concomitant periodic inspection and coating maintenance programs. Table 1.2.7 provides the chemical composition of several acceptable fastener materials to help the ISFSI owner select the most appropriate material for his site. The two mechanical properties, ultimate strength $\sigma_u$ and yield strength $\sigma_y$ are also listed. For purposes of structural evaluations, the lower bound values of $\sigma_u$ and $\sigma_y$ from the menu of materials listed in Table 1.2.7 are used (see Table 3.4.10).*

*For convenience in referencing, the representative menu of fastener materials listed in Table 1.2.7 (and other additional acceptable materials from the ASME Code) will be referred to as "Alloy Z."*

*As shown in the design drawing, the anchor studs are spaced sufficiently far apart such that a practical reinforced concrete pad with embedded receptacles can be designed to carry the axial pull from the anchor studs without overstressing the enveloping concrete monolith. The design specification and supporting analyses in this FSAR are focused on qualifying the overpack structures, including the sector lugs and the anchor studs. The design of the ISFSI pad, and its anchor receptacle will vary from site to site, depending on the geology and seismological characteristics of the sub-terrain underlying the ISFSI pad region. The data provided in this FSAR, however, provide the complete set of factored loads to which the ISFSI pad, its sub-grade, and the anchor receptacles must be designed within the purview of ACI-349-97 [1.0.4]. Detailed requirements on the ISFSI pads for anchored casks are provided in Section 2.0.4.*

1.2.1.2.2 HI-TRAC (Transfer Cask)

Like the storage overpack, the HI-TRAC transfer cask is a rugged, heavy-walled cylindrical vessel. The main structural function of the transfer cask is provided by carbon steel, and the main neutron and gamma shielding functions are provided by water and lead, respectively. The transfer cask is a steel, lead, steel layered cylinder with a water jacket attached to the exterior. Figure 1.2.9 provides a typical cross section of a HI-TRAC with the pool lid installed.

The transfer cask provides an internal cylindrical cavity of sufficient size for housing an MPC. The top lid has additional neutron shielding to provide neutron attenuation in the vertical direction (from SNF in the MPC below). The MPC access hole through the HI-TRAC top lid is provided to allow the lowering/raising of the MPC between the HI-TRAC transfer cask, and the HI-STORM or HI-STAR overpacks. The HI-TRAC is provided with two bottom lids, each used separately. The pool lid is bolted to the bottom flange of the HI-TRAC and is utilized during MPC fuel loading and sealing operations. In addition to providing shielding in the axial direction, the pool lid incorporates a seal which is designed to hold clean demineralized water in

the HI-TRAC inner cavity, thereby preventing contamination of the exterior of the MPC by the contaminated fuel pool water. After the MPC has been drained, dried, and sealed, the pool lid is removed and the HI-TRAC transfer lid is attached. The transfer lid incorporates two sliding doors which allow the opening of the HI-TRAC bottom for the MPC to be raised/lowered. Figure 1.2.10 provides a cross section of the HI-TRAC with the transfer lid installed.

Trunnions are provided for lifting and rotating the transfer cask body between vertical and horizontal positions. The lifting trunnions are located just below the top flange and the pocket trunnions are located above the bottom flange. The two lifting trunnions are provided to lift and vertically handle the HI-TRAC, and the pocket trunnions provide a pivot point for the rotation of the HI-TRAC for downending or upending.

Two HI-TRAC transfer casks of different weights are provided to house the MPCs. The 125 ton HI-TRAC weight does not exceed 125 tons during any loading or transfer operation. The 100 ton HI-TRAC weight does not exceed 100 tons during any loading or transfer operation. The internal cylindrical cavities of the two HI-TRACs are identical. However, the external dimensions are different. The 100ton HI-TRAC has a reduced thickness of lead and water shielding and consequently, the external dimensions are different. The structural steel thickness is identical in the two HI-TRACs. This allows most structural analyses of the 125 ton HI-TRAC to bound the 100 ton HI-TRAC design. Additionally, as the two HI-TRACs are identical except for a reduced thickness of lead and water, the 125 ton HI-TRAC has a larger thermal resistance than the smaller and lighter 100 ton HI-TRAC. Therefore, for normal conditions the 125 ton HI-TRAC thermal analysis bounds that of the 100 ton HI-TRAC. Separate shielding analyses are performed for each HI-TRAC since the shielding thicknesses are different between the two.

### 1.2.1.3 Shielding Materials

The HI-STORM 100 System is provided with shielding to ensure the radiation and exposure requirements in 10CFR72.104 and 10CFR72.106 are met. This shielding is an important factor in minimizing the personnel doses from the gamma and neutron sources in the SNF in the MPC for ALARA considerations during loading, handling, transfer, and storage. The fuel basket structure of edge-welded composite boxes and Boral™ neutron poison panels attached to the fuel storage cell vertical surfaces provide the initial attenuation of gamma and neutron radiation emitted by the radioactive spent fuel. The MPC shell, baseplate, lid and closure ring provide additional thicknesses of steel to further reduce the gamma flux at the outer canister surfaces.

In the HI-STORM 100 storage overpack, the primary shielding in the radial direction is provided by concrete and steel. In addition, the storage overpack has a thick circular concrete slab attached to the ~~underside of the~~ lid, and a thick circular concrete pedestal upon which the MPC rests. These slabs provide gamma and neutron attenuation in the axial direction. The thick overpack lid and concrete shield*ing integral to* ~~ring atop~~ the lid provide additional gamma attenuation in the upward direction, reducing both direct radiation and skyshine. Several steel plate and shell elements provide additional gamma shielding as needed in specific areas, as well as incremental

improvements in the overall shielding effectiveness. *Gamma shield cross plates, as depicted in Figure 5.3.19, provide attenuation of scattered gamma radiation as it exits the inlet and outlet air ducts.*

In the HI-TRAC transfer cask radial direction, gamma and neutron shielding consists of steel-lead-steel and water, respectively. In the axial direction, shielding is provided by the top lid, and the pool or transfer lid. In the HI-TRAC pool lid, layers of steel-lead-steel provide an additional measure of gamma shielding to supplement the gamma shielding at the bottom of the MPC. In the transfer lid, layers of steel-lead-steel provide gamma attenuation. For the 125 ton HI-TRAC transfer lid, the neutron shield material, Holtite-A, is also provided. The 125 ton HI-TRAC top lid is composed of steel-neutron shield-steel, with the neutron shield material being Holtite-A. The 100 ton HI-TRAC top lid is composed of steel only providing gamma attenuation.

#### 1.2.1.3.1 Boral Neutron Absorber

Boral is a thermal neutron poison material composed of boron carbide and aluminum (aluminum powder and plate). Boron carbide is a compound having a high boron content in a physically stable and chemically inert form. The boron carbide contained in Boral is a fine granulated powder that conforms to ASTM C-750-80 nuclear grade Type III. The Boral cladding is made of alloy aluminum, a lightweight metal with high tensile strength which is protected from corrosion by a highly resistant oxide film. The two materials, boron carbide and aluminum, are chemically compatible and ideally suited for long-term use in the radiation, thermal, and chemical environment of a nuclear reactor, spent fuel pool, or dry cask.

The documented historical applications of Boral, in environments comparable to those in spent fuel pools and fuel storage casks, dates to the early 1950s (the U.S. Atomic Energy Commission's AE-6 Water-Boiler Reactor [1.2.2]). Technical data on the material was first printed in 1949, when the report "Boral: A New Thermal Neutron Shield" was published [1.2.3]. In 1956, the first edition of the Reactor Shielding Design Manual [1.2.4] was published and it contained a section on Boral and its properties.

In the research and test reactors built during the 1950s and 1960s, Boral was frequently the material of choice for control blades, thermal-column shutters, and other items requiring very good thermal-neutron absorption properties. It is in these reactors that Boral has seen its longest service in environments comparable to today's applications.

Boral found other uses in the 1960s, one of which was a neutron poison material in baskets used in the shipment of irradiated, enriched fuel rods from Canada's Chalk River laboratories to Savannah River. Use of Boral in shipping containers continues, with Boral serving as the poison in current British Nuclear Fuels Limited casks and the recently licensed Storable Transport Cask by Nuclear Assurance Corporation [1.2.5].

As indicated in Tables 1.2.3-1.2.5, Boral has been licensed by the NRC for use in numerous BWR and PWR spent fuel storage racks and has been extensively used in international nuclear

installations.

Boral has been exclusively used in fuel storage applications in recent years. Its use in spent fuel pools as the neutron absorbing material can be attributed to its proven performance and several unique characteristics, such as:

- The content and placement of boron carbide provides a very high removal cross section for thermal neutrons.
- Boron carbide, in the form of fine particles, is homogeneously dispersed throughout the central layer of the Boral panels.
- The boron carbide and aluminum materials in Boral do not degrade as a result of long-term exposure to radiation.
- The neutron absorbing central layer of Boral is clad with permanently bonded surfaces of aluminum.
- Boral is stable, strong, durable, and corrosion resistant.

Boral absorbs thermal neutrons without physical change or degradation of any sort from the anticipated exposure to gamma radiation and heat. The material does not suffer loss of neutron attenuation capability when exposed to high levels of radiation dose.

Holtec International's QA Program ensures that Boral is manufactured under the control and surveillance of a Quality Assurance/Quality Control Program that conforms to the requirements of 10CFR72, Subpart G. Holtec International has procured over 200,000 panels of Boral from AAR Advanced Structures in over 30 projects. Boral has always been purchased with a minimum $^{10}B$ loading requirement. Coupons extracted from production runs were tested using the wet chemistry procedure. The actual $^{10}B$ loading, out of thousands of coupons tested, has never been found to fall below the design specification. The size of this coupon database is sufficient to provide reasonable assurance that all future Boral procurements will continue to yield Boral with full compliance with the stipulated minimum loading. Furthermore, the surveillance, coupon testing, and material tracking processes which have so effectively controlled the quality of Boral are expected to continue to yield Boral of similar quality in the future. Nevertheless, to add another layer of insurance, only 75% $^{10}B$ credit of the fixed neutron absorber is assumed in the criticality analysis in compliance with Chapter 6.0, IV, 4.c of NUREG-1536, Standard Review Plan for Dry Cask Storage Systems.

#### 1.2.1.3.2 Neutron Shielding

The specification of the HI-STORM overpack and HI-TRAC transfer cask neutron shield material is predicated on functional performance criteria. These criteria are:

- Attenuation of neutron radiation to appropriate levels;
- Durability of the shielding material under normal conditions, in terms of thermal, chemical, mechanical, and radiation environments;
- Stability of the homogeneous nature of the shielding material matrix;
- Stability of the shielding material in mechanical or thermal accident conditions to the desired performance levels; and
- Predictability of the manufacturing process under adequate procedural control to yield an in-place neutron shield of desired function and uniformity.

Other aspects of a shielding material, such as ease of handling and prior nuclear industry use, are also considered, within the limitations of the main criteria. Final specification of a shield material is a result of optimizing the material properties with respect to the main criteria, along with the design of the shield system, to achieve the desired shielding results.

Neutron attenuation in the HI-STORM overpack is provided by the thick walls of concrete contained in the steel vessel, lid, and pedestal. Concrete is a shielding material with a long proven history in the nuclear industry. The concrete composition has been specified to ensure its continued integrity at the long term temperatures required for SNF storage.

The HI-TRAC transfer cask is equipped with a water jacket providing radial neutron shielding. Demineralized water will be utilized in the water jacket. To ensure operability for low temperature conditions, ethylene glycol (25% in solution) will be added to reduce the freezing point for low temperature operations (e.g., below 32°F) [1.2.7].

Neutron shielding in the 125 ton HI-TRAC transfer cask in the axial direction is provided by Holtite-A within the top lid and transfer lid. Holtite-A is a poured-in-place solid borated synthetic neutron-absorbing polymer. ~~commercially available under the trade name NS-4-FR (or equivalent) and will be~~ *Holtite-A is* specified with a ~~*minimum*~~ *nominal* $B_4C$ loading of 1 weight percent for the HI-STORM 100 System. Appendix 1.B provides the Holtite-A material properties *germane to its function as a neutron shield.* Holtec has performed confirmatory qualification tests on Holtite-A under the company's QA program.

In the following, a brief summary of the performance characteristics and properties of Holtite-A is provided.

Density

The specific gravity of Holtite-A is 1.68 g/cm$^3$ as specified in Appendix 1.B. To conservatively bound any potential weight loss at the design temperature and any inability to reach the theoretical density, the density is reduced by 4% to 1.61 g/cm$^3$. The density used for the shielding analysis is conservatively assumed to be 1.61 g/cm$^3$ to underestimate the shielding capabilities of the neutron shield.

Hydrogen

The weight concentration of hydrogen is 6.0%. However, all shielding analyses conservatively assume 5.9% hydrogen by weight in the calculations.

Boron Carbide

Boron carbide dispersed within Holtite-A in finely dispersed powder form is present in 1% (~~*minimum*~~ *nominal*) weight concentration. Holtite-A may be specified with a $B_4C$ content of up to 6.5 weight percent. For the HI-STORM 100 System, Holtite-A is specified with a ~~*minimum*~~ *nominal* $B_4C$ weight percent of 1%.

Design Temperature

The design temperature of Holtite-A is set at 300°F. The maximum spatial temperature of Holtite-A under all normal operating conditions must be demonstrated to be below this design temperature.

Thermal Conductivity

~~Table 1.B.1 lists the thermal conductivity of Holtite-A specified by the manufacturer.~~

The Holtite-A neutron shielding material is stable below the design temperature for the long term and provides excellent shielding properties for neutrons. *A conservative, lower bound conductivity is stipulated for use in the thermal analyses of Chapter 4 (Section 4.2) based on information in the technical literature.* ~~Technical papers provided in Appendix 1.B validate the neutron shield material's long-term stability within the design temperature and the material's ability to resist the effects of a fire accident. Holtite-A has been utilized in similar applications and has been licensed for use in a transportation cask under Docket No. 71-9235 and for storage in the HI-STAR 100 overpack under Docket No. 72-1008.~~

#### 1.2.1.3.3 Gamma Shielding Material

For gamma shielding, the HI-STORM 100 storage overpack primarily relies on massive concrete sections contained in a robust steel vessel. A carbon steel plate, the shield shell, is located adjacent to the overpack inner shell to provide additional gamma shielding (Figure 1.2.7). Carbon steel supplements the concrete gamma shielding in most portions of the storage overpack, most notably the baseplate and the lid. To reduce the radiation streaming through the overpack air inlets and outlets, gamma shield cross plates are installed in the ducts (Figure 1.2.8) to scatter the radiation. This scattering acts to significantly reduce the local dose rates adjacent to the overpack air inlets and outlets.

In the HI-TRAC transfer cask, the primary gamma shielding is provided by lead. As in the storage overpack, carbon steel supplements the lead gamma shielding of the HI-TRAC transfer cask.

### 1.2.1.4 Lifting Devices

Lifting of the HI-STORM 100 System may be accomplished either by attachment at the top of the storage overpack ("top lift"), as would typically be done with a crane, or by attachment at the bottom ("bottom lift"), as would be effected by a number of lifting/handling devices.

For a top lift, the storage overpack is equipped with four threaded anchor blocks arranged circumferentially around the overpack. These anchor blocks are used for overpack lifting as well as securing the overpack lid to the overpack body. The anchor blocks are integrally welded to the overpack radial plates which in turn are full-length welded to the overpack inner shell, outer shell, and baseplate *(HI-STORM100) or inlet air duct horizontal plates (HI-STORM 100S)*. Studs are threaded into the anchor blocks to secure the lid and provide for lifting. These four studs provide for direct attachment of lifting devices which, along with a specially-designed lift rig to ensure a vertical lift, allow lifting by a crane or similar equipment. The lift rig shall be designed to lift a fully-loaded storage overpack with margins of safety specified in ANSI N14.6 [1.2.9].

A bottom lift of the HI-STORM 100 storage overpack is effected by the insertion of four hydraulic jacks underneath the inlet vent horizontal plates (Figure 1.2.1). A slot in the overpack baseplate allows the hydraulic jacks to be placed underneath the inlet vent horizontal plate. The hydraulic jacks lift the loaded overpack to a sufficient height to allow air pads to be placed or removed from under the overpack baseplate.

The HI-TRAC transfer cask is equipped with two lifting trunnions and two pocket trunnions. The lifting trunnions are positioned just below the top forging. The two pocket trunnions are located above the bottom forging and attached to the outer shell. The pocket trunnions are designed to allow rotation of the HI-TRAC. All trunnions are built from a high strength alloy with proven corrosion and non-galling characteristics. The lifting trunnions are designed in accordance with NUREG-0612 and ANSI N14.6. The lifting trunnions are installed by threading

into tapped holes just below the top forging. ~~The lifting trunnions feature a locking plate, which is placed onto the trunnion shaft and bolted to the HI-TRAC external surface to prevent the lifting trunnion from backing out.~~

The top of the MPC lid is equipped with four threaded holes that allow lifting of the loaded MPC. These holes allow the loaded MPC to be raised/lowered through the HI-TRAC transfer cask using lifting cleats. The threaded holes in the MPC lid are designed in accordance with NUREG-0612 and ANSI N14.6.

#### 1.2.1.5 Design Life

The design life of the HI-STORM 100 System is 40 years. This is accomplished by using material of construction with a long proven history in the nuclear industry and specifying materials known to withstand their operating environments with little to no degradation. A maintenance program, as specified in Chapter 9, is also implemented to ensure the HI-STORM 100 System will exceed its design life of 40 years. The design considerations that assure the HI-STORM 100 System performs as designed throughout the service life include the following:

HI-STORM Overpack and HI-TRAC Transfer Cask

- Exposure to Environmental Effects
- Material Degradation
- Maintenance and Inspection Provisions

MPC

- Corrosion
- Structural Fatigue Effects
- Maintenance of Helium Atmosphere
- Allowable Fuel Cladding Temperatures
- Neutron Absorber Boron Depletion

The adequacy of the HI-STORM 100 System for its design life is discussed in Sections 3.4.11 and 3.4.12.

### 1.2.2 Operational Characteristics

#### 1.2.2.1 Design Features

The HI-STORM 100 System incorporates some unique design improvements. These design innovations have been developed to facilitate the safe long term storage of SNF. Some of the design originality is discussed in Subsection 1.2.1 and below.

The free volume of the MPCs is inerted with 99.995% pure helium gas during the spent nuclear fuel loading operations. Table 1.2.2 specifies the helium fill ~~mass to be placed in~~*requirements for* the MPC internal cavity. ~~*as a function of the free space. As the fill pressure is highly dependent on the MPC internal temperature, which increases because of the decay heat and the vacuum drying process, it is more accurate to measure the mass placed in the MPC internal cavity rather than pressure.*~~

The HI-STORM overpack has been designed to synergistically combine the benefits of steel and concrete. The steel-concrete-steel construction of the HI-STORM overpack provides ease of fabrication, increased strength, and an optimal radiation shielding arrangement. The concrete is primarily provided for radiation shielding and the steel is primarily provided for structural functions.

The strength of concrete in tension and shear is conservatively neglected. Only the compressive strength of the concrete is accounted for in the analyses.

The criticality control features of the HI-STORM 100 are designed to maintain the neutron multiplication factor k-effective (including uncertainties and calculational bias) at less than 0.95 under all normal, off-normal, and accident conditions of storage as analyzed in Chapter 6. This level of conservatism and safety margins is maintained, while providing the highest storage capacity.

### 1.2.2.2 Sequence of Operations

Table 1.2.6 provides the basic sequence of operations necessary to defuel a spent fuel pool using the HI-STORM 100 System. The detailed sequence of steps for storage-related loading and handling operations is provided in Chapter 8 and is supported by the Design Drawings in Section 1.5. A summary of the *general actions needed for the* loading and unloading operations is provided below. Figures 1.2.16 and 1.2.17 provide a pictorial view of typical loading and unloading operations, respectively.

#### Loading Operations

At the start of loading operations, the HI-TRAC transfer cask is configured with the pool lid installed[†]. The HI-TRAC water jacket is filled with demineralized water or a 25% ethylene glycol solution depending on the ambient temperature conditions. The lift yoke is used to position HI-TRAC in the designated preparation area or setdown area for HI-TRAC inspection and MPC insertion. The annulus is filled with plant demineralized water *(borated if necessary)*, and an inflatable annulus seal is installed. The inflatable seal prevents contact between spent fuel pool water and the MPC shell reducing the possibility of contaminating the outer surfaces of the

[†] *This text discusses the use of separate pool and transfer lids. Users may, with appropriate design features and crane capacity, use only one lid. See Chapter 8 for additional details on applicable requirements for the single-lid option.*

MPC. The MPC is then filled with ~~*spent fuel pool*~~ water. *Based on the MPC model and fuel enrichment (as required by the CoC), this may be borated water* or plant demineralized water. HI-TRAC and the MPC are lowered into the spent fuel pool for fuel loading using the lift yoke. Pre-selected assemblies are loaded into the MPC and a visual verification of the assembly identification is performed.

While still underwater, a thick shielding lid (the MPC lid) is installed. The lift yoke is remotely engaged to the HI-TRAC lifting trunnions and is used to lift the HI-TRAC close to the spent fuel pool surface. As an ALARA measure, dose rates are measured on the top of the HI-TRAC and MPC prior to removal from the pool to check for activated debris on the top surface. The MPC lift bolts (securing the MPC lid to the lift yoke) are removed. As HI-TRAC is removed from the spent fuel pool, the lift yoke and HI-TRAC are sprayed with demineralized water to help remove contamination.

HI-TRAC is removed from the pool and placed in the designated preparation area. The top surfaces of the MPC lid and the upper flange of HI-TRAC are decontaminated. The inflatable annulus seal is removed, and an annulus shield is installed. The annulus shield provides additional personnel shielding at the top of the annulus and also prevents small items from being dropped into the annulus. Dose rates are measured at the MPC lid and around the mid-height circumference of HI-TRAC to ensure that the dose rates are within expected values. The Automated Welding System baseplate shield *(if used)* is installed to reduce dose rates around the top of the cask. The MPC water level is lowered slightly and the MPC lid is seal-welded using the Automated Welding System (AWS) *or other approved welding process*. Liquid penetrant examinations are performed on the root and final passes. A *multi-layer liquid penetrant or* volumetric examination is also performed on the MPC lid-to-shell weld. The water level is raised to the top of the MPC and the weld is hydrostatically tested. Then a small volume of the water is displaced with helium gas. The helium gas is used for leakage testing. A helium leakage rate test is performed on the MPC lid confinement weld (lid-to-shell) to verify weld integrity and to ensure that ~~*required*~~ leakage rates are within acceptance criteria. ~~*The water level is raised to the top of the MPC again and then the*~~ *The* MPC water is displaced from the MPC by blowing pressurized helium or nitrogen gas into the vent port of the MPC, thus displacing the water through the drain line. ~~*The volume of water displaced from the MPC is measured to determine the free volume inside the MPC. This information is used to determine the helium backfill requirements for the MPC.*~~

*For storage of moderate burnup fuel,* ~~the~~ *a* Vacuum Drying System (VDS) *may be used to remove moisture from the MPC cavity. The VDS* is connected to the MPC and is used to remove ~~all~~ liquid water from the MPC in a stepped evacuation process. The stepped evacuation process is used to preclude the formation of ice in the MPC and Vacuum Drying System lines. The internal pressure is reduced and held for a duration to ensure that all liquid water has evaporated. *This process is continued until the pressure in the MPC meets the technical specification limit and can be held there for the required amount of time.*

*For storage of high burnup fuel and as an option for storage of moderate burnup fuel, the removal of moisture from the MPC is accomplished by forced recirculation of helium through the MPC cavity. Warm, dry gas is supplied to the MPC drain port and forced through the MPC cavity where it absorbs moisture. The humidified gas travels out of the MPC and through appropriate equipment to filter, cool, and remove the absorbed water from the gas. The dry gas may be heated prior to its return to the MPC in a closed loop system to begin the moisture removal process again. This process is continued until the temperature of the gas in the MPC cavity meets the limit specified in the technical specifications. Using a gas recirculation system for moisture removal provides simultaneous fuel cooling.*

Following *moisture removal,* ~~this dryness test,~~ the VDS *or helium recirculation system* is disconnected and the Helium Backfill System (HBS) is attached and the MPC is backfilled with a predetermined amount of helium gas. The helium backfill ensures adequate heat transfer during storage, provides an inert atmosphere for long-term fuel integrity, and provides the means of future leakage rate testing of the MPC confinement boundary welds. Cover plates are installed and seal-welded over the MPC vent and drain ports with liquid penetrant examinations performed on the root and final passes. The cover plates are helium leakage tested to confirm that they meet the established leakage rate criteria.

The MPC closure ring is then placed on the MPC, aligned, tacked in place, and seal welded, providing redundant closure of the MPC lid and cover plates confinement closure welds. Tack welds are visually examined, and the root and final welds are inspected using the liquid penetrant examination technique to ensure weld integrity. The annulus shield is removed and the remaining water in the annulus is drained. The AWS Baseplate shield is removed. The MPC lid and accessible areas of the top of the MPC shell are smeared for removable contamination and HI-TRAC dose rates are measured. The HI-TRAC top lid is installed and the bolts are torqued. The MPC lift cleats are installed on the MPC lid. The MPC lift cleats are the primary lifting point of the MPC. Two cleats provide redundant support of the MPC when it is lifted or supported.

Two or four stays (depending on the site crane hook configuration) are installed between the MPC lift cleats and the lift yoke main pins. The stays secure the MPC within HI-TRAC while the pool lid is replaced with the transfer lid. The HI-TRAC is manipulated to replace the pool lid with the transfer lid. The MPC lift cleats and stays support the MPC during the transfer operations.

MPC transfer from the HI-TRAC transfer cask into the overpack may be performed inside or outside the fuel building. Similarly, HI-TRAC and HI-STORM may be transferred to the ISFSI in several different ways. The loaded HI-TRAC may be handled in the vertical or horizontal orientation. The loaded HI-STORM can only be handled vertically.

For MPC transfers inside the fuel building, the empty HI-STORM overpack is inspected and positioned in the truck bay with the lid removed and, *for the HI-STORM 100 overpack,* the vent duct shield inserts installed. The loaded HI-TRAC is placed using the fuel building crane on top of HI-STORM. Alignment pins help guide HI-TRAC during this operation.

After the HI-TRAC is positioned atop the HI-STORM, the MPC is raised slightly. The transfer lid door locking pins are removed and the doors are opened. The MPC is lowered into HI-STORM. Following verification that the MPC is fully lowered, slings are disconnected and lowered onto the MPC lid. *For the HI-STORM 100*, the doors are closed and the locking pins are installed. HI-TRAC is removed from on top of HI-STORM along with the vent shield inserts. *For the HI-STORM 100S, the HI-TRAC may need to be lifted above the overpack to a height sufficient to allow closure of the transfer lid doors without interfering with the MPC lift cleats. The HI-TRAC is then removed and placed in its designated storage location.* The MPC lift cleats and slings are removed from atop the MPC.

*For* the HI-STORM *100, the overpack* lid is installed, and the upper vent screens and gamma shield cross plates are installed. The HI-STORM lid studs *and nuts* are installed and torqued. *For the HI-STORM 100S, if the temporary or permanent lid is used, the lid is installed and the appropriate studs and nuts are installed and torqued. After the overpack has left the Part 50 facility, the permanent overpack lid is installed and the permanent studs and nuts are installed and torqued. Upper vent screens and gamma shield cross plates are installed. As plant-specific needs dictate, the loaded HI-STORM 100 or 100S overpack may be moved into or out of the Part 50 facility without the temporary or permanent lid installed. When moving the overpack to the ISFSI, the permanent lid should be installed as soon as practicable after the loaded overpack has left the Part 50 facility. See Section 8.1.1.2 for specific administrative controls required to move the loaded overpack out of the Part 50 facility without the permanent lid installed.*

For MPC transfers outside of the fuel building, the empty HI-STORM overpack is inspected and positioned in the cask transfer facility with the lid removed and, *for the HI-STORM 100,* the vent duct shield inserts installed. The loaded HI-TRAC is transported to the cask transfer facility in the vertical or horizontal orientation. A number of methods may be utilized as long as the handling limitations prescribed in the technical specifications are not exceeded.

To place the loaded HI-TRAC in a horizontal orientation, a transport frame or "cradle" is utilized. The cradle is equipped with rotation trunnions which engage the HI-TRAC pocket trunnions. While the loaded HI-TRAC is lifted by the lifting trunnions, the HI-TRAC is lowered onto the cradle rotation trunnions. Then, the crane lowers and the HI-TRAC pivots around the pocket trunnions and is placed in the horizontal position in the cradle.

If the loaded HI-TRAC is transferred to the cask transfer facility in the horizontal orientation, the HI-TRAC and cradle are placed on a transport vehicle. The transport vehicle may be an air pad, railcar, heavy-haul trailer, dolly, etc. If the loaded HI-TRAC is transferred to the cask transfer facility in the vertical orientation, the HI-TRAC may be lifted by the lifting trunnions or seated on the transport vehicle. During the transport of the loaded HI-TRAC, standard plant heavy load handling practices shall be applied including administrative controls for the travel path and tie-down mechanisms.

After the loaded HI-TRAC arrives at the cask transfer facility, the HI-TRAC is upended by a crane if the HI-TRAC is in a horizontal orientation. The loaded HI-TRAC is then placed, using the crane located in the transfer area, on top of HI-STORM. Alignment pins help guide HI-TRAC during this operation.

After the HI-TRAC is positioned atop the HI-STORM, the MPC is raised slightly. The transfer lid door locking pins are removed and the doors are opened. The MPC is lowered into HI-STORM. Following verification that the MPC is fully lowered, slings are disconnected and lowered onto the MPC lid. *For the HI-STORM 100,* the doors are closed and the locking pins are installed. HI-TRAC is removed from on top of HI-STORM along with the vent duct shield inserts. *For the HI-STORM 100S, the HI-TRAC may need to be lifted above the overpack to a height sufficient to allow closure of the transfer lid doors without interfering with the MPC lift cleats. The HI-TRAC is then removed and placed in its designated storage location.* The MPC lift cleats and slings are removed from atop the MPC. The HI-STORM lid is installed, and the upper vent screens and gamma shield cross plates are installed. The HI-STORM lid studs *and nuts* are installed and torqued.

After the HI-STORM has been loaded either within the fuel building or at a dedicated cask transfer facility, the HI-STORM is then moved to its designated position on the ISFSI pad. The HI-STORM overpack may be moved using a number of methods as long as the handling limitations listed in the technical specifications are not exceeded. The loaded HI-STORM must be handled in the vertical orientation. However, the loaded overpack may be lifted from the top through the lid studs or from the bottom by the inlet vents. After the loaded HI-STORM is lifted, it may be placed on a transport mechanism or continue to be lifted by the lid studs and transported to the storage location. The transport mechanism may be an air pad, crawler, railcar, heavy-haul trailer, dolly, etc. During the transport of the loaded HI-STORM, standard plant heavy load handling practices shall be applied including administrative controls for the travel path and tie-down mechanisms. Once in position at the storage pad, vent operability testing is performed to ensure that the system is functioning within its design parameters.

*In the case of HI-STORM 100A, the anchor studs are installed and fastened into the anchor receptacles in the ISFSI pad in accordance with the design requirements.*

Unloading Operations

The HI-STORM 100 System unloading procedures describe the general actions necessary to prepare the MPC for unloading, cool the stored fuel assemblies in the MPC, flood the MPC cavity, remove the lid welds, unload the spent fuel assemblies, and recover HI-TRAC and empty the MPC. Special precautions are outlined to ensure personnel safety during the unloading operations, and to prevent the risk of MPC overpressurization and thermal shock to the stored spent fuel assemblies.

The MPC is recovered from HI-STORM either at the cask transfer facility or the fuel building using any of the methodologies described in Section 8.1. *If it hasn't already been removed prior*

*to entering the Part 50 facility,* the HI-STORM lid is removed *and, for the HI-STORM 100,* the vent duct shield inserts are installed. The MPC lift cleats are attached to the MPC and the MPC lift slings are attached to the MPC lift cleats. *For the HI-STORM 100S, the transfer doors may need to be opened to avoid interfering with the MPC lift cleats.* HI-TRAC is raised and positioned on top of HI-STORM. The MPC is raised into HI-TRAC. Once the MPC is raised into HI-TRAC, the HI-TRAC transfer lid doors are closed and the locking pins are installed. HI-TRAC is removed from on top of HI-STORM.

The HI-TRAC is brought into the fuel building and manipulated for bottom lid replacement. The transfer lid is replaced with the pool lid. The MPC lift cleats and stays support the MPC during the transfer operations.

HI-TRAC and its enclosed MPC are returned to the designated preparation area and the MPC stays, MPC lift cleats, and HI-TRAC top lid are removed. The annulus is filled with plant demineralized water*(borated, if necessary)*. The annulus shield is installed *and pressurized* to protect the annulus from debris produced from the lid removal process. Similarly, HI-TRAC top surfaces are covered with a protective fire-retarding blanket.

The MPC closure ring and vent and drain port cover plates are core drilled. Local ventilation is established around the MPC ports. The RVOAs are attached to the vent and drain port. The RVOAs allow access to the inner cavity of the MPC, while providing a hermetic seal. The MPC is cooled using a closed-loop heat exchanger to reduce the MPC internal temperature to allow water flooding. Following the fuel cool-down, the MPC is flooded with *borated or unborated* water *in accordance with the CoC*. The -MPC lid-to-MPC shell weld is removed. Then, all weld removal equipment is removed with the MPC lid left in place.

~~*The inflatable annulus seal is installed and pressurized*~~. The MPC lid is rigged to the lift yoke and the lift yoke is engaged to HI-TRAC lifting trunnions. If weight limitations require, the neutron shield jacket is drained. HI-TRAC is placed in the spent fuel pool and the MPC lid is removed. All fuel assemblies are returned to the spent fuel storage racks and the MPC fuel cells are vacuumed to remove any assembly debris. HI-TRAC and MPC are returned to the designated preparation area where the MPC water is *removed* ~~*pumped back into the spent fuel pool*~~. The annulus water is drained and the MPC and HI-TRAC are decontaminated in preparation for re-utilization.

### 1.2.2.3 Identification of Subjects for Safety and Reliability Analysis

#### 1.2.2.3.1 Criticality Prevention

Criticality is controlled by geometry and neutron absorbing materials in the fuel basket. The MPC-24, *MPC-24E, and 24EF(all with lower enriched fuel)* and *the* MPC-68 do not rely on soluble boron credit during loading or the assurance that water cannot enter the MPC during storage to meet the stipulated criticality limits.

*Each MPC model is equipped with Boral neutron absorber plates affixed to the fuel cell walls as shown on the design drawings. The minimum $^{10}B$ areal density specified for the Boral in each MPC model is shown in Table 1.2.2. These values are chosen to be consistent with the assumptions made in the criticality analyses.*

~~The MPC-68, *MPC-68FF, MPC-24E, and MPC-32* baskets *are is* equipped with Boral with a minimum $^{10}B$ areal density of 0.0372 g/cm$^2$. The MPC-24 basket is equipped with Boral with a minimum $^{10}B$ areal density of 0.0267 g/cm$^2$. Due to the lower reactivity of the fuel to be stored in the MPC-68F as specified by the *Technical Specifications in Chapter 12 Appendix B to the CoC*, the MPC-68F is equipped with Boral with a minimum $^{10}B$ areal density of 0.01 g/cm$^2$.~~

*The MPC-24, MPC-24E and 24EF (all with higher enriched fuel) and the MPC-32 take credit for soluble boron in the MPC water for criticality prevention during wet loading and unloading operations. Boron credit is only necessary for these PWR MPCs during loading and unloading operations that take place under water. During storage, with the MPC cavity dry and sealed from the environment, criticality control measures beyond the fixed neutron poisons affixed to the storage cell walls are not necessary because of the low reactivity of the fuel in the dry, helium filled canister and the design features that prevent water from intruding into the canister during storage.*

1.2.2.3.2 Chemical Safety

There are no chemical safety hazards associated with operations of the HI-STORM 100 dry storage system. A detailed evaluation is provided in Section 3.4.

1.2.2.3.3 Operation Shutdown Modes

The HI-STORM 100 System is totally passive and consequently, operation shutdown modes are unnecessary. Guidance is provided in Chapter 8, which outlines the HI-STORM 100 unloading procedures, and Chapter 11, which outlines the corrective course of action in the wake of postulated accidents.

1.2.2.3.4 Instrumentation

As stated earlier, the HI-STORM 100 confinement boundary is the MPC, which is seal welded and leak tested. The HI-STORM 100 is a completely passive system with appropriate margins of safety; therefore, it is not necessary to deploy any instrumentation to monitor the cask in the storage mode. At the option of the user, ~~*a thermocouple*~~ *temperature elements* may be utilized to monitor the air temperature of the HI-STORM overpack exit vents in lieu of routinely inspecting the ducts for blockage. See Subsection 2.3.3.2 and the Technical Specifications in ~~*Chapter 12*~~ *Appendix A to the CoC* for additional details.

1.2.2.3.5 Maintenance Technique

Because of their passive nature, the HI-STORM 100 System requires minimal maintenance over its lifetime. No special maintenance program is required. Chapter 9 describes the acceptance criteria and maintenance program set forth for the HI-STORM 100.

1.2.3 Cask Contents

The HI-STORM 100 System is designed to house different types of MPCs. The MPCs are designed to store both BWR and PWR spent nuclear fuel assemblies. Tables 1.2.1 and 1.2.2 provide key design parameters for the MPCs. A description of acceptable fuel assemblies for storage in the MPCs is provided in Section 2.1 and the ~~Technical Specifications~~ *Approved Contents section of Appendix B to the CoC. This includes fuel assemblies classified as damaged fuel assemblies and fuel debris in accordance with the definitions of these terms in the CoC. A summary of the types of fuel authorized for storage in each MPC model is provided below. All fuel assemblies must meet the fuel specifications provided in Appendix B to the CoC. All fuel assemblies classified as damaged fuel or fuel debris must be stored in damaged fuel containers.* The quantity of damaged fuel containers with fuel debris is limited to meet the off-site transportation requirements of 10CFR71, specifically, 10CFR71.63(b).

~~*At this time, failed fuel assemblies discharged from Dresden Unit 1 and Humboldt Bay reactors have been evaluated and this application requests approval of these two types of damaged fuel assemblies and fuel debris as contents for storage in the MPC-68. Damaged fuel assemblies and fuel debris shall be placed in damaged fuel containers prior to loading into the MPC to facilitate handling and contain loose components. Any combination of damaged fuel assemblies in damaged fuel containers and intact fuel assemblies, up to a total of 68, may be stored in the standard MPC-68. The MPC-68 design to store fuel debris is almost identical to the MPC-68 design to store intact or damaged fuel, the sole difference being the former requires a lower minimum $B^{10}$ areal density in the Boral. Therefore, an MPC-68 which is to store damaged fuel containers with fuel assemblies classified as fuel debris must be designated during fabrication to ensure the proper minimum $B^{10}$ areal density criteria is applied. To distinguish an MPC-68 which is fabricated to store damaged fuel containers with fuel assemblies classified as fuel debris, the MPC shall be designated as an "MPC-68F".*~~

~~*Up to 4 damaged fuel containers with fuel assemblies classified as fuel debris and meeting the requirements in the Technical Specifications may be stored within an MPC-68F.*~~

*MPC-24*

*The MPC-24 is designed to accommodate up to twenty-four (24) PWR fuel assemblies classified as intact fuel assemblies, with or without non-fuel hardware.*

*MPC-24E*

*The MPC-24E is designed to accommodate up to twenty-four (24) PWR fuel assemblies, with or without non-fuel hardware. Up to four (4) fuel assemblies may be classified as damaged fuel assemblies, with the balance being classified as intact fuel assemblies. Damaged fuel assemblies must be stored in fuel storage locations 3, 6, 19, and/or 22 (see Figure 1.2.4A).*

*MPC-24EF*

*The MPC-24EF is designed to accommodate up to twenty-four (24) PWR fuel assemblies, with or without non-fuel hardware. Up to four (4) fuel assemblies may be classified as damaged fuel assemblies or fuel debris, with the balance being classified as intact fuel assemblies. Damaged fuel assemblies and fuel debris must be stored in fuel storage locations 3, 6, 19, and/or 22 (see Figure 1.2.4A).*

*MPC-32*

*The MPC-32 is designed to accommodate up to thirty-two (32) PWR fuel assemblies classified as intact fuel assemblies, with or without non-fuel hardware.*

*MPC-68*

*The MPC-68 is designed to accommodate up to sixty-eight (68) BWR intact and/or damaged fuel assemblies, with or without channels. For the Dresden Unit 1 or Humboldt Bay plants, the number of damaged fuel assemblies may be up to a total of 68. For damaged fuel assemblies from plants other than Dresden Unit 1 and Humboldt Bay, the number of damaged fuel assemblies is limited to sixteen (16) and must be stored in fuel storage locations 1, 2, 3, 8, 9, 16, 25, 34, 35, 44, 53, 60, 61, 66, 67, and/or 68 (see Figure 1.2.2).*

*MPC-68F*

*The MPC-68F is designed to accommodate up to sixty-eight (68) Dresden Unit 1 or Humboldt Bay BWR fuel assemblies (with or without channels) made up of any combination of fuel assemblies classified as intact fuel assemblies, damaged fuel assemblies, and up to four (4) fuel assemblies classified as fuel debris.*

*MPC-68FF*

*The MPC-68FF is designed to accommodate up to sixty-eight (68) BWR fuel assemblies with or without channels. Any number of these fuel assemblies may be Dresden Unit 1 or Humboldt Bay BWR fuel assemblies classified as intact fuel or damaged fuel. Dresden Unit 1 and Humboldt Bay fuel debris is limited to eight(8) DFCs. DFCs containing Dresden Unit 1 or Humboldt Bay fuel debris may be stored in any fuel storage location For BWR fuel assemblies from plants other than Dresden Unit 1 and Humboldt Bay, the total number of fuel assemblies classified as*

*damaged fuel assemblies or fuel debris is limited to sixteen (16), with up to eight (8) of the 16 fuel assemblies classified as fuel debris. These fuel assemblies must be stored in fuel storage locations 1, 2, 3, 8, 9, 16, 25, 34, 35, 44, 53, 60, 61, 66, 67, and/or 68 (see Figure 1.2.2). The balance of the fuel storage locations may be filled with intact BWR fuel assemblies, up to a total of 68.*

Table 1.2.1

KEY SYSTEM DATA FOR HI-STORM 100 SYSTEM

| ITEM | QUANTITY | NOTES |
|---|---|---|
| Types of MPCs included in this revision of the submittal | ~~3~~ *7* | ~~1~~ *4* for PWR<br>~~2~~ *3* for BWR |
| MPC storage capacity†: | MPC-24<br><br>*MPC-24E*<br><br>*MPC-24EF* | Up to 24 intact zircaloy or stainless steel clad PWR fuel assemblies *with or without non-fuel hardware. Up to four damaged fuel assemblies may be stored in the MPC-24E and up to four (4)damaged fuel assemblies and/or fuel assemblies classified as fuel debris may be stored in the MPC-24EF* ~~Control components and non fuel hardware are not authorized for loading.~~<br><br>*OR* |
| | *MPC-32* | *Up to 32 intact zircaloy or stainless steel clad PWR fuel assemblies.* |
| | MPC-68 | Any combination of *Dresden Unit 1 or Humboldt Bay* damaged fuel assemblies in damaged fuel containers and intact fuel assemblies, up to a total of 68. ~~in the MPC-68~~ . *For damaged fuel other than Dresden Unit 1 and Humboldt Bay, the number of fuel assemblies is limited to 16, with the balance being intact fuel assemblies.*<br><br>OR |

† *See Section 1.2.3 and Appendix B to the CoC for a complete description of cask contents and fuel specifications, respectively.*

*Table 1.2.1 (continued)*
*KEY SYSTEM DATA FOR HI-STORM 100 SYSTEM*

| ITEM | QUANTITY | NOTES |
|---|---|---|
| MPC storage capacity: | MPC-68F | Up to 4 damaged fuel containers with zircaloy clad *Dresden Unit 1 (D-1) or Humboldt Bay (HB)* BWR fuel debris and the complement damaged zircaloy clad *Dresden Unit 1 or Humboldt Bay* BWR fuel assemblies in damaged fuel containers or intact *Dresden Unit 1 or Humboldt Bay* BWR intact fuel assemblies ~~*within an MPC-68F*~~.<br><br>*OR* |
| | *MPC-68FF* | *Up to 68 Dresden Unit 1 or Humboldt Bay intact fuel or damaged fuel and up to 8 damaged fuel containers containing D-1 or HB fuel debris. For other BWR plants, up to 16 damaged fuel containers containing BWR damaged fuel and/or fuel debris with the complement intact fuel assemblies, up to a total of 68. The number of damaged fuel containers containing BWR fuel debris is limited to eight (8) for all BWR plants.* |

Table 1.2.2

KEY PARAMETERS FOR HI-STORM 100 MULTI-PURPOSE CANISTERS

| | PWR | BWR |
|---|---|---|
| Pre-disposal service life (years) | 40 | 40 |
| Design temperature, max./min. (°F) | 725°†/-40°†† | 725°†/-40°†† |
| Design internal pressure (psig)<br>Normal conditions<br>Off-normal conditions<br>Accident Conditions | <br>100<br>100<br>~~125~~ *200* | <br>100<br>100<br>~~125~~ *200* |
| Total heat load, max. (kW) | ~~20.88~~ *27.77* (MPC-24)<br>*28.17 (MPC-24E & MPC-24EF)*<br><br>*28.74 (MPC-32)* | ~~21.4~~ *28.19*<br>(MPC-68, *MPC-68F, & MPC-68FF*) |
| Maximum permissible peak fuel cladding temperature:<br><br>Normal (°F)<br><br>Short Term & Accident (°F) | <br><br>See Table 2.2.3<br><br>1058° | <br><br>See Table 2.2.3<br><br>1058° |
| MPC internal environment<br><br>Helium fill ~~(g moles/l of free space)~~ | ~~0.1212~~ *29.3 – 33.3 psig*<br><br>*OR*<br><br>0.1212 gm-moles/l *of free space* | ~~0.1218.~~ *29.3 – 33.3psig*<br><br>*OR*<br><br>0.1212 gm-moles/l *of free space* |
| Maximum permissible multiplication factor ($k_{eff}$) including all uncertainties and biases | < 0.95 | < 0.95 |
| Boral $^{10}B$ Areal Density (g/cm$^2$) | 0.0267<br>(MPC-24, *MPC-24E & MPC-24EF*)<br><br>*0.0372 (MPC-32)* | 0.0372<br>(MPC-68 *& MPC-68FF*)<br><br>0.01 (MPC-68F) |
| End closure(s) | Welded | Welded |
| Fuel handling | Opening compatible with standard grapples | Opening compatible with standard grapples |
| Heat dissipation | Passive | Passive |

† Maximum normal condition design temperatures for the MPC fuel basket. A complete listing of design temperatures for all components is provided in Table 2.2.3.

†† Temperature based on off-normal minimum environmental temperatures specified in Section 2.2.2.2 and no fuel decay heat load.

| Table 1.2.3<br><br>BORAL EXPERIENCE LIST<br>DOMESTIC PRESSURIZED WATER REACTORS | |
|---|---|
| Plant | Utility |
| Donald C. Cook | American Electric Power |
| Indian Point 3 | New York Power Authority |
| Maine Yankee | Maine Yankee Atomic Power |
| Salem 1,2 | Public Service Electric and Gas |
| Sequoyah 1,2 | Tennessee Valley Authority |
| Yankee Rowe | Yankee Atomic Power |
| Zion 1,2 | Commonwealth Edison Company |
| Byron 1,2 | Commonwealth Edison Company |
| Braidwood 1,2 | Commonwealth Edison Company |
| Three Mile Island I | GPU Nuclear |
| Sequoyah (rerack) | Tennessee Valley Authority |
| D.C. Cook (rerack) | American Electric Power |
| Maine Yankee | Maine Yankee Atomic Power Company |
| Connecticut Yankee | Northeast Utilities Service Company |
| Salem Units 1 & 2 (rerack) | Public Service Electric & Gas Company |

| Table 1.2.4<br><br>BORAL EXPERIENCE LIST<br>DOMESTIC BOILING WATER REACTORS | |
|---|---|
| Browns Ferry 1,2,3 | Tennessee Valley Authority |
| Brunswick 1,2 | Carolina Power & Light |
| Clinton | Illinois Power |
| Dresden 2,3 | Commonwealth Edison Company |
| Duane Arnold Energy Center | Iowa Electric Light and Power |
| J.A. FitzPatrick | New York Power Authority |
| E.I. Hatch 1,2 | Georgia Power Company |
| Hope Creek | Public Service Electric and Gas |
| Humboldt Bay | Pacific Gas and Electric Company |
| LaCrosse | Dairyland Power |
| Limerick 1,2 | Philadelphia Electric Company |
| Monticello | Northern States Power |
| Peachbottom 2,3 | Philadelphia Electric Company |
| Perry 1,2 | Cleveland Electric Illuminating |
| Pilgrim | Boston Edison Company |
| Susquehanna 1,2 | Pennsylvania Power & Light |
| Vermont Yankee | Vermont Yankee Atomic Power |
| Hope Creek | Public Service Electric and Gas Company |
| Shearon Harris Pool B | Carolina Power & Light Company |
| Duane Arnold | Iowa Electric Light and Power |
| Pilgrim | Boston Edison Company |
| LaSalle Unit 1 | Commonwealth Edison Company |
| Millstone Point Unit One | Northeast Utilities Service Company |

| Table 1.2.5<br><br>BORAL EXPERIENCE LIST<br>FOREIGN PLANTS | |
|---|---|
| INTERNATIONAL INSTALLATIONS USING BORAL | |
| COUNTRY | PLANT(S) |
| France | 12 PWR Plants |
| South Africa | Koeberg 1,2 |
| Switzerland | Beznau 1,2<br><br>Gosgen |
| Taiwan | Chin-Shan 1,2<br><br>Kuosheng 1,2 |
| Mexico | Laguna Verde Units 1,2 |
| Korea | Ulchin Units 1, 2 |
| Brazil | Angra 1 |
| United Kingdom | Sizewell B |

Table 1.2.6

HI-STORM 100 OPERATIONS SEQUENCE

| | |
|---|---|
| Site-specific handling and operations procedures will be prepared, reviewed, and approved by each owner/user. | |
| 1 | HI-TRAC and MPC lowered into the fuel pool without lids |
| 2 | Fuel assemblies transferred into the MPC fuel basket |
| 3 | MPC lid lowered onto the MPC |
| 4 | HI-TRAC/MPC assembly moved to the decon pit and MPC lid welded in place, volumetrically or multi-layer PT examined, hydrostatically tested, and leak tested |
| 5 | MPC dewatered, ~~vacuum dried~~*moisture removed*, backfilled with helium, and the closure ring welded |
| 6 | HI-TRAC annulus drained and external surfaces decontaminated |
| 7 | MPC lifting cleats installed and MPC weight supported by rigging |
| 8 | HI-TRAC pool lid removed and transfer lid attached |
| 9 | MPC lowered and seated on HI-TRAC transfer lid |
| 10 | HI-TRAC/MPC assembly transferred to atop HI-STORM overpack |
| 11 | MPC weight supported by rigging and transfer lid doors opened |
| 12 | MPC lowered into HI-STORM overpack, ~~*HI-TRAC transfer lid doors closed,*~~ and HI-TRAC removed from atop HI-STORM overpack |
| 13 | HI-STORM overpack lid installed and bolted in place |
| 14 | HI-STORM overpack placed in storage at the ISFSI pad |
| *15* | *For HI-STORM 100A (or 100SA) users, the overpack is anchored to the ISFSI pad by installation of nuts onto studs and torquing to the minimum required torque.* |

*Table 1.2.7*

*REPRESENTATIVE ASME BOLTING AND THREADED ROD MATERIALS ACCEPTABLE FOR THE HI-STORM 100A ANCHORAGE SYSTEM*

*ASME MATERIALS FOR BOLTING*

| Composition | I.D. | Type Grade or UNC No. | Ultimate Strength (ksi) | Yield Strength (ksi) | Code Permitted Size Range† |
|---|---|---|---|---|---|
| C | SA-354 | BC K04100 | 125 | 109 | $t \leq 2.5$" |
| ¾ Cr | SA-574 | 51B37M | 170 | 135 | $t \geq 5/8$" |
| 1 Cr – 1/5 Mo | SA-574 | 4142 | 170 | 135 | $t \geq 5/8$" |
| 1 Cr-1/2 Mo-V | SA-540 | B21 (K 14073) | 165 | 150 | $t \leq 4$" |
| 5 Cr – ½ Mo | SA-193 | B7 | 125 | 105 | $t \leq 2.5$" |
| $2N_i$ – ¾ Cr – ¼ Mo | SA-540 | B23 (H-43400) | 135 | 120 | |
| $2N_i$ – ¾ Cr – 1/3 Mo | SA-540 | B-24 (K-24064) | 135 | 120 | |
| 17Cr-4Ni-4Cu | SA-564 | 630(H-1100) | 140 | 115 | |
| 17Cr-4Ni-4Cu | SA-564 | 630(H-1075) | 145 | 125 | |
| 25Ni-15Cr-2Ti | SA-638 | 660 | 130 | 85 | |
| 22CR-13Ni-5Mn | SA-479 | XM-19(S20910) | 135 | 105 | |

*Note: The materials listed in this table are representative of acceptable materials and have been abstracted from the ASME Code, Section II, Part D, Table 3. Other materials listed in the Code are also acceptable as long as they meet the size requirements, the minimum requirements on yield and ultimate strength (see Table 2.0.4), and are suitable for the environment. The family of acceptable materials is denoted as "Alloy Z."*

† *Nominal diameter of the bolt (or rod) as listed in the Code tables. Two-inch diameter studs/rods are specified for the HI-STORM 100A.*

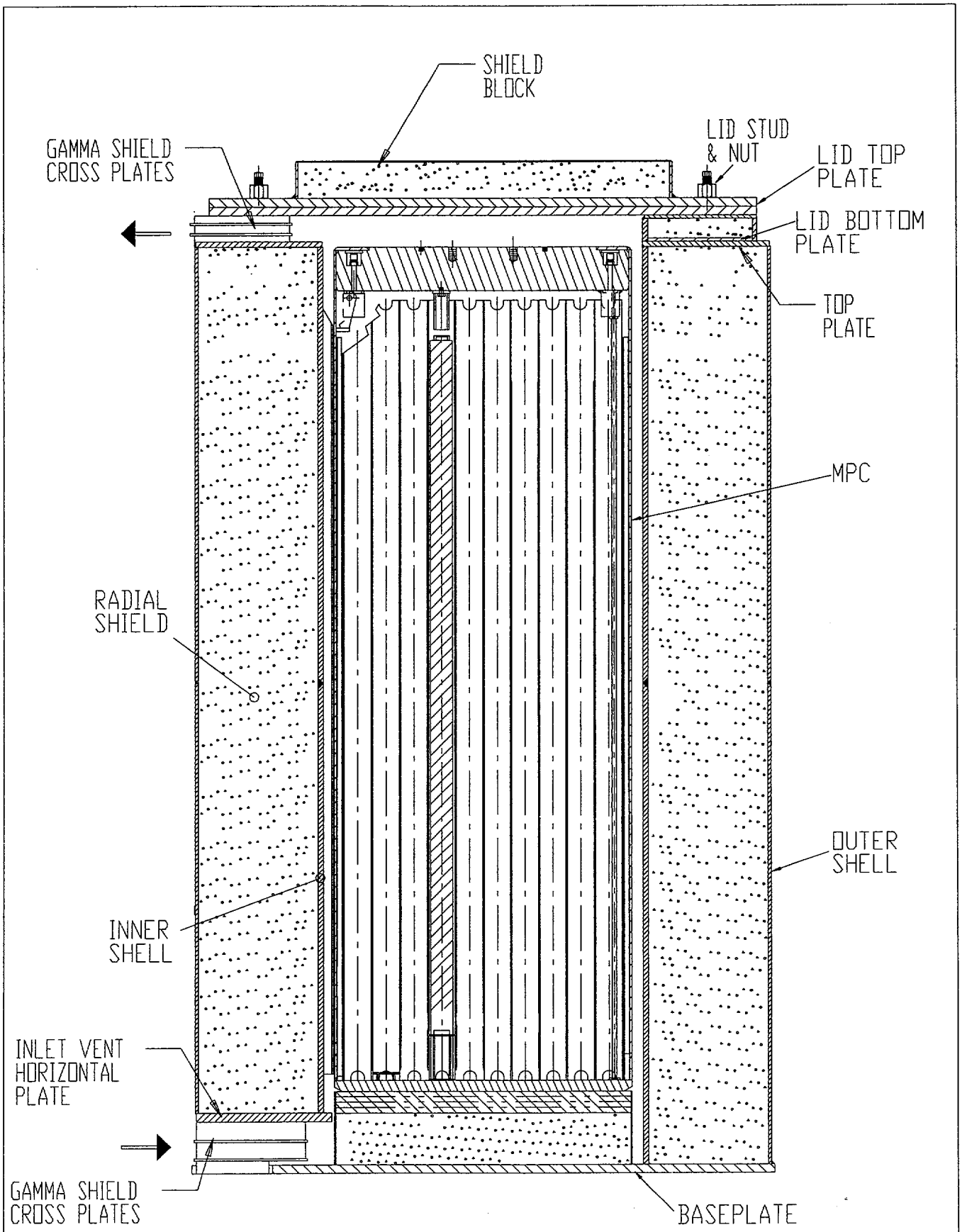


FIGURE 1.2.1A; CROSS SECTION VIEW OF THE HI-STORM 100S SYSTEM

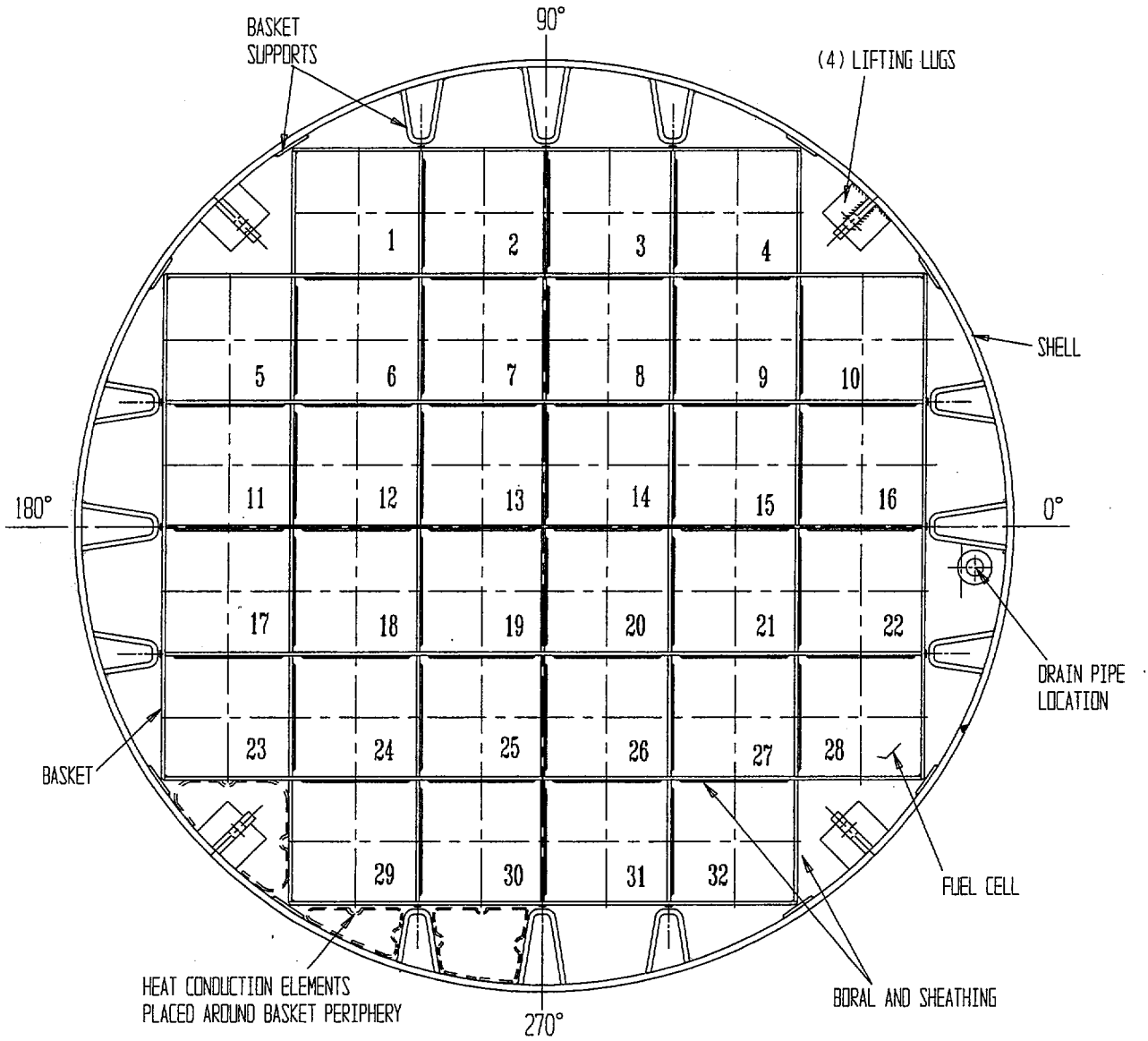


FIGURE 1.2.3; MPC-32 CROSS SECTION

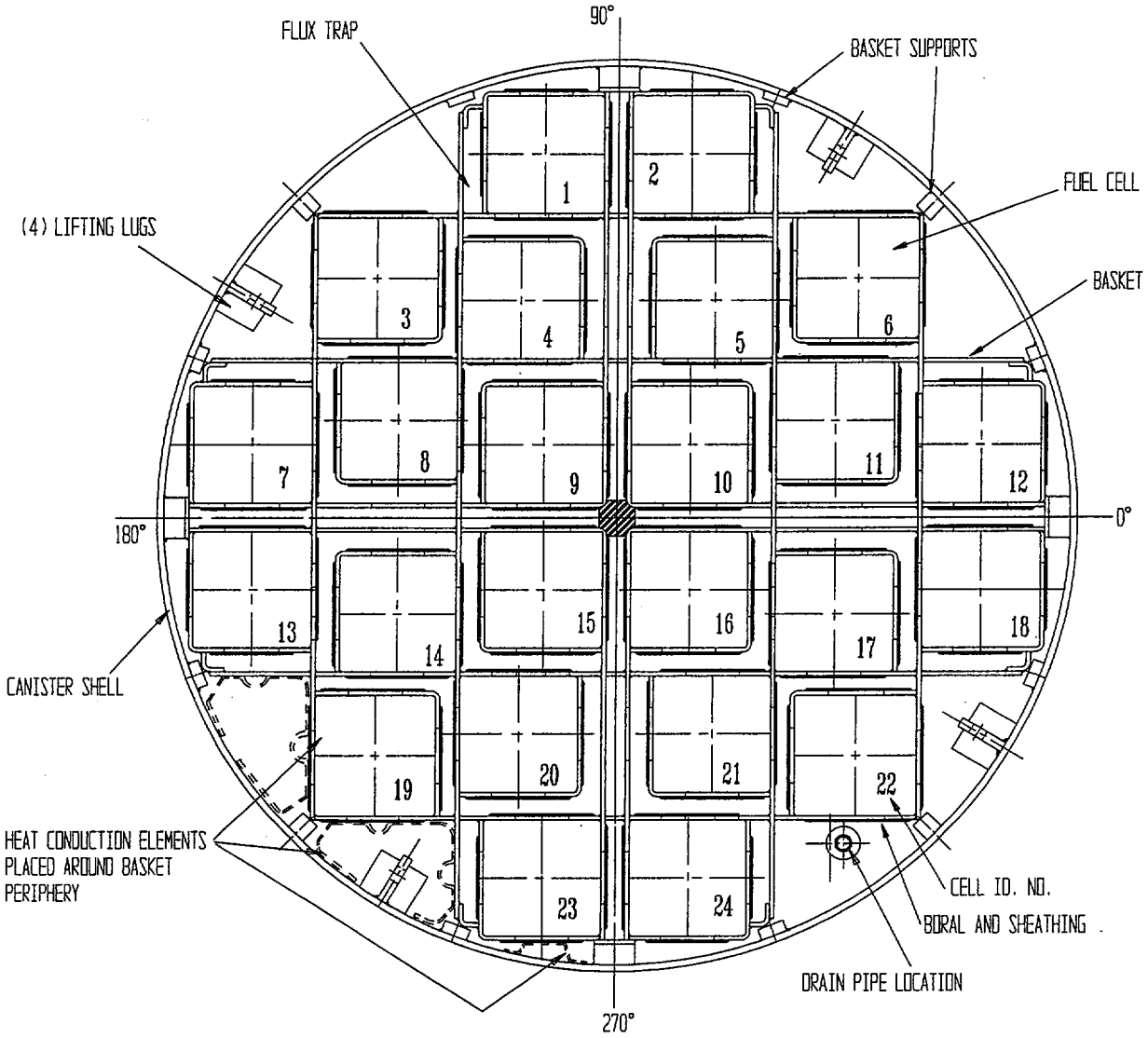


FIGURE 1.2.4A; MPC-24E/24EF CROSS SECTION VIEW

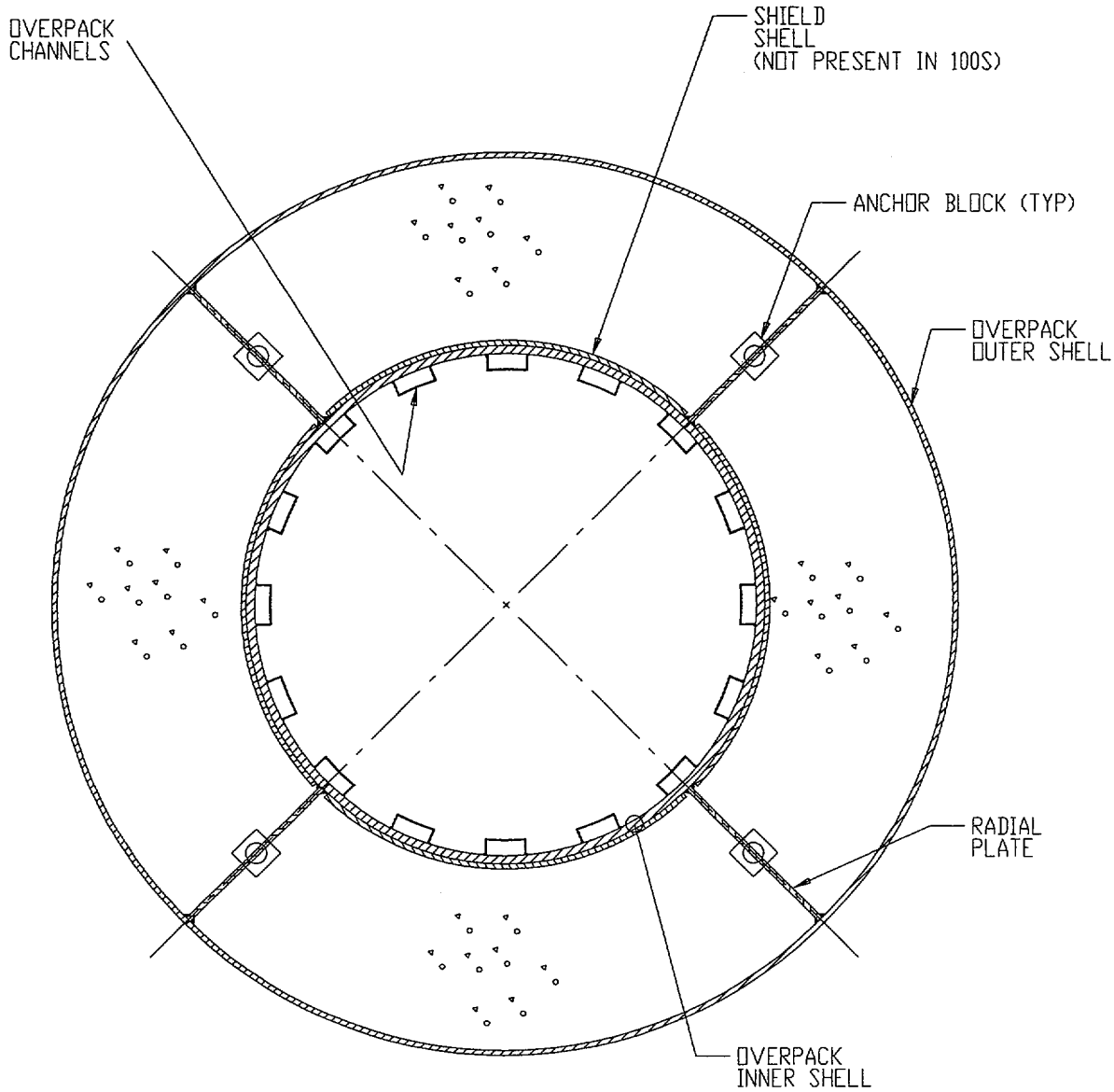


FIGURE 1.2.7; CROSS SECTION OF HI-STORM OVERPACK

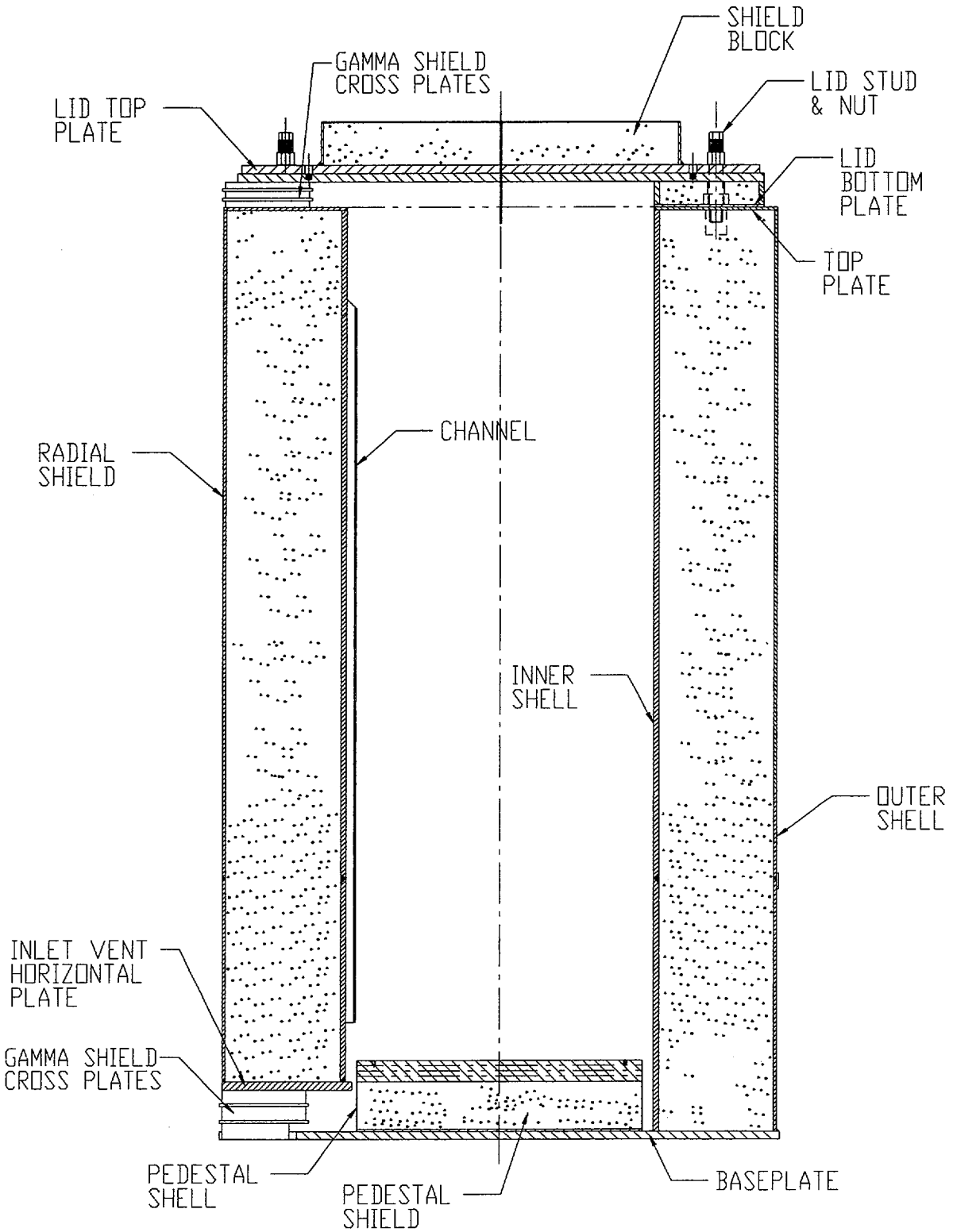


FIGURE 1.2.8A; HI-STORM 100S OVERPACK CROSS SECTIONAL ELEVATION VIEW

## 1.4 GENERIC CASK ARRAYS

The HI-STORM 100 System is stored in a vertical configuration. The required center-to-center spacing between the modules (layout pitch) is guided by ~~*heat transfer*~~ *operational* considerations. Tables 1.4.1 and 1.4.2 provide the *nominal layout pitch information.* ~~*minimum pitch requirements.*~~ *Site-specific pitches are* determined by *practical operation with supporting* heat transfer calculations in Chapter 4. The pitch values *in Tables 1.4.1 and 1.4.2* are *nominal* ~~*minimums*~~ and may be *varied* ~~*increased*~~ to suit the user's specific needs. ~~*If MPC transfer operations between the HI-TRAC transfer cask and HI-STORM overpack are to be performed on the ISFSI pad, the minimum cask pitch values may not provide sufficient clearance to perform the transfer operations. An alternative to performing the MPC transfer operations on the ISFSI pad is to provide a separate MPC transfer area at the ISFSI.*~~

*Table 1.4.1 provides recommended cask spacing data for* array(s) of two by N casks. *T*he pitch between adjacent rows of casks ~~*(P1)*~~ and between each adjacent column of casks ~~*(P2)*~~ *are denoted by $P_1$ and $P_2$ In Table 1.4.1.* ~~*shall be in accordance with Table 1.4.1.*~~ There may be an unlimited number of rows. The distance between adjacent arrays of two by N casks (P3) shall be as specified in Table 1.4.1. See Figure 1.4.1 for further clarification. The pattern of required pitches and distances may be repeated for an unlimited number of columns.

For a square array of casks the pitch between adjacent casks *may* ~~*shall*~~ be in accordance with Table 1.4.2. See Figure 1.4.2 for further clarification. ~~*The total quantity of rows and columns is unlimited provided the minimum pitch specified in Table 1.4.2 is met.*~~ *The data in Table 1.4.2 provide nominal values for large ISFSIs (i.e., those with hundreds of casks in a uniform layout), where access of feed air to the centrally located casks may become a matter of thermal consideration. From a thermal standpoint, regardless of the size of the ISFSI, the casks should be arrayed in such a manner that the tributary area for each cask (open ISFSI area attributable to a cask) is a minimum of 225 $ft^2$. Subsection 4.4.1.1.7 provides the detailed thermal evaluation of the required tributary area. For specific sites, a smaller tributary area can be utilized after appropriate thermal evaluations for the site-specific conditions are performed.* ~~*, subject to evaluation under 10 CFR 72.48.*~~

Table 1.4.1

CASK LAYOUT ~~*MINIMUM*~~ PITCH DATA FOR 2 BY N ARRAYS

| **Orientation** | ~~***Minimum***~~ ***Nominal*** **Cask Pitch (ft.)** |
|---|---|
| Between adjacent rows, P1, and adjacent columns, P2 | 13.5 |
| Between adjacent sets of two columns, P3 | 38 |

Table 1.4.2

CASK LAYOUT ~~*MINIMUM*~~ PITCH DATA FOR SQUARE ARRAYS

| **Orientation** | ~~***Minimum***~~ ***Nominal*** **Cask Pitch (ft.)** |
|---|---|
| Between adjacent casks | 18 - 8" |

## 1.5 GENERAL ARRANGEMENT DRAWINGS

The following HI-STORM 100 System design drawings and bills of materials are provided on subsequent pages in this subsection:

| Drawing Number/Sheet | Description | Rev. |
|---|---|---|
| *5014-1392 Sht 1/4* | *HI-STAR 100 MPC-32 Construction* | *11~~0~~* |
| *5014-1392 Sht 2/4* | *HI-STAR 100 MPC-32 Construction* | *10* |
| *5014-1392 Sht 3/4* | *HI-STAR 100 MPC-32 Construction* | *10* |
| *5014-1392 Sht 4/4* | *HI-STAR 100 MPC-32 Construction* | *9* |
| *5014-1393 Sht 1/6* | *HI-STAR 100 MPC-32 Construction* | *11* |
| *5014-1393 Sht 2/6* | *HI-STAR 100 MPC-32 Construction* | *10* |
| *5014-1393 Sht 3/6* | *HI-STAR 100 MPC-32 Construction* | *10* |
| *5014-1393 Sht 4/6* | *HI-STAR 100 MPC-32 Construction* | *9* |
| *5014-1393 Sht 5/6* | *HI-STAR 100 MPC-32 Construction* | *8* |
| *5014-1393 Sht 6/6* | *HI-STAR 100 MPC-32 Construction* | *8* |
| 5014-1395 Sht 1/4 | HI-STAR 100 MPC-24 Construction | 13~~2~~ |
| 5014-1395 Sht 2/4 | HI-STAR 100 MPC-24 Construction | *10* |
| 5014-1395 Sht 3/4 | HI-STAR 100 MPC-24 Construction | *11* |
| 5014-1395 Sht 4/4 | HI-STAR 100 MPC-24 Construction | *9* |
| 5014-1396 Sht 1/6 | HI-STAR 100 MPC-24 Construction | *15* |
| 5014-1396 Sht 2/6 | HI-STAR 100 MPC-24 Construction | *13* |
| 5014-1396 Sht 3/6 | HI-STAR 100 MPC-24 Construction | *12* |
| 5014-1396 Sht 4/6 | HI-STAR 100 MPC-24 Construction | *10* |
| 5014-1396 Sht 5/6 | HI-STAR 100 MPC-24 Construction | *9* |
| 5014-1396 Sht 6/6 | HI-STAR 100 MPC-24 Construction | *8* |
| *5014-2889* | *HI-STAR 100 MPC-24E Construction (1)* | *0* |
| *5014-2890* | *HI-STAR 100 MPC-24E Construction (2)* | *~~1~~2* |
| *5014-2891* | *HI-STAR 100 MPC-24E Construction (3)* | *0* |
| *5014-2892* | *HI-STAR 100 MPC-24E Construction (4)* | *0* |
| 5014-1401 Sht 1/4 | HI-STAR 100 MPC-68 Construction | *15~~3~~* |
| 5014-1401 Sht 2/4 | HI-STAR 100 MPC-68 Construction | *9* |
| 5014-1401 Sht 3/4 | HI-STAR 100 MPC-68 Construction | *10* |
| 5014-1401 Sht 4/4 | HI-STAR 100 MPC-68 Construction | *9* |
| 5014-1402 Sht 1/6 | HI-STAR 100 MPC-68 Construction | *15* |
| 5014-1402 Sht 2/6 | HI-STAR 100 MPC-68 Construction | *14* |
| 5014-1402 Sht 3/6 | HI-STAR 100 MPC-68 Construction | *13* |
| 5014-1402 Sht 4/6 | HI-STAR 100 MPC-68 Construction | *11* |
| 5014-1402 Sht 5/6 | HI-STAR 100 MPC-68 Construction | *10* |
| 5014-1402 Sht 6/6 | HI-STAR 100 MPC-68 Construction | *10* |
| 5014-1495 Sht 1/6 | HI-STORM 100 Assembly | *8* |
| 5014-1495 Sht 2/6 | Cross Section "Z" - "Z" View of HI-STORM | *9* |
| 5014-1495 Sht 3/6 | Section "Y" - "Y" of HI-STORM | *7* |
| 5014-1495 Sht 4/6 | Section "X" -"X" of HI-STORM | *8* |
| 5014-1495 Sht 5/6 | Section "W" -"W" of HI-STORM | *9* |
| ~~*5014-1495 Sht 6/6*~~ | ~~*HI-STORM Outlet Vent Thermocouple Mounting*~~ | ~~*2*~~ |

| Drawing Number/Sheet | Description | Rev. |
|---|---|---|
| | ~~*Hardware*~~ | |
| 5014-1561 Sht 1/5 | View "A" -"A" of HI-STORM | *7* |
| 5014-1561 Sht 2/5 | Detail "B" of HI-STORM | *7* |
| 5014-1561 Sht 3/5 | Detail of Air Inlet of HI-STORM | *7* |
| 5014-1561 Sht 4/5 | Detail of Air Outlet of HI-STORM | *7* |
| ~~*5014-1561 Sht 5/5*~~ | ~~*Miscellaneous Detail of HI-STORM*~~ | ~~*7*~~ |
| ~~*5014-3067*~~*3669, Sht 1* | *HI-STORM 100S Assembly* | *0* |
| ~~*5014-3068*~~*3669, Sht 2* | *HI-STORM 100S Assembly and BOM*~~*Cross Section "Z" - "Z" View of HI-STORM 100S*~~ | *0* |
| ~~*5014-3069*~~*3669, Sht 3* | *HI-STORM 100S Assembly*~~*Section "Y" - "Y" of HI-STORM 100S*~~ | *0* |
| ~~*5014-3070*~~*3669, Sht 4* | ~~*Section "X" - "X" of HI-STORM 100S*~~*HI-STORM 100S Overpack Body Assembly Sub-Component A* | *0* |
| ~~*5014-3071*~~*3669, Sht 5* | ~~*Section "W" - "W" of HI-STORM 100S*~~ *HI-STORM 100S Overpack Body Iner Shell Part Details* | *0* |
| ~~*5014-3072*~~*3669, Sht 6* | ~~*View "A" - "A" of HI-STORM 100S*~~ *HI-STORM 100S Overpack Body Inner Shell Part Details* | *0* |
| ~~*5014-3073*~~*3669, Sht 7* | ~~*Section B-B of Lid Shield of Hi-STORM 100S*~~*HI-STORM 100S Pedestal Assembly Sub-Component B* | *0* |
| ~~*5014-3074*~~*3669, Sht 8* | ~~*Detail "B" of HI-STORM 100S*~~*HI-STORM 100S Lid Assembly Sub-Component C* | *0* |
| ~~*5014-3075*~~*3669, Sht 9* | ~~*Detail of Air Inlet of HI-STORM 100S*~~*HI-STORM 100S Lid Stud and Nut Sub-Components D & E* | *0* |
| *3669, Sht 10* | *HI-STORM 100S Vent Screen Assemblies Sub-Components F & G* | *0* |
| *3669, Sht 11* | *HI-STORM 100S Gamma Shield Cross Plates* | *0* |
| ~~*5014-1783 Sht 1/1*~~ | ~~*General Arrangement Damaged Fuel Container*~~ | ~~*2*~~ |
| ~~*5014-1784 Sht 1/1*~~ | ~~*Damaged Fuel Container Details*~~ | ~~*1*~~ |
| 5014-1880 Sht 1/10 | 125 Ton HI-TRAC Outline with Pool Lid | *7* |
| 5014-1880 Sht 2/10 | 125 Ton HI-TRAC Body Sectioned Elevation | *8* |
| 5014-1880 Sht 3/10 | 125 Ton HI-TRAC Body Sectioned Elevation "B" - "B" | *7* |
| 5014-1880 Sht 4/10 | 125 Ton Transfer Cask Detail of Bottom Flange | *8* |
| 5014-1880 Sht 5/10 | 125 Ton Transfer Cask Detail of Pool Lid | *8* |
| 5014-1880 Sht 6/10 | 125 Ton Transfer Cask Detail of Top Flange | *8* |
| 5014-1880 Sht 7/10 | 125 Ton Transfer Cask Detail of Top Lid | *7* |
| 5014-1880 Sht 8/10 | 125 Ton Transfer Cask View "Y" - "Y" | *7* |
| 5014-1880 Sht 9/10 | 125 Ton Transfer Cask Lifting Trunnion and Locking Pad | *5* |
| 5014-1880 Sht 10/10 | 125 Ton Transfer Cask View "Z" - "Z" | *7* |
| 5014-1928 Sht 1/2 | 125 Ton HI-TRAC Transfer Lid Housing Detail | *8* |
| 5014-1928 Sht 2/2 | 125 Ton HI-TRAC Transfer Lid Door Detail | *8* |
| 5014-2145 Sht 1/10 | 100 Ton HI-TRAC Outline with Pool Lid | *6* |
| 5014-2145 Sht 2/10 | 100 Ton HI-TRAC Body Sectioned Elevation | *6* |
| 5014-2145 Sht 3/10 | 100 Ton HI-TRAC Body Sectioned Elevation 'B-B' | *6* |
| 5014-2145 Sht 4/10 | 100 Ton HI-TRAC Detail of Bottom Flange | *5* |
| 5014-2145 Sht 5/10 | 100 Ton HI-TRAC Detail of Pool Lid | *4* |

| Drawing Number/Sheet | Description | Rev. |
|---|---|---|
| 5014-2145 Sht 6/10 | 100 Ton HI-TRAC Detail of Top Flange | *6* |
| 5014-2145 Sht 7/10 | 100 Ton HI-TRAC Detail of Top Lid | *6* |
| 5014-2145 Sht 8/10 | 100 Ton HI-TRAC View Y-Y | *6* |
| 5014-2145 Sht 9/10 | 100 Ton HI-TRAC Lifting Trunnions and Locking Pad | *4* |
| 5014-2145 Sht 10/10 | 100 Ton HI-TRAC View Z-Z | *5* |
| 5014-2152 Sht 1/2 | 100 Ton HI-TRAC Transfer Lid Housing Detail | *6* |
| 5014-2152 Sht 2/2 | 100 Ton HI-TRAC Transfer Lid Door Detail | *6* |
| *5014-3187* | *Lug and Anchoring Detail for HI-STORM 100A* | *1* |
| *BM-1477 Sht 1/2* | *Bill-of-Material for 32-Assembly HI-STAR 100 PWR MPC* | *9* |
| *BM-1477 Sht 2/2* | *Bill-of-Materias for 32-Assembly HI-STAR 100 PWR MPC* | *10* |
| BM-1478, Sht 1/2 | Bill-of-Material for 24-Assembly HI-STAR 100 PWR MPC | *10* |
| BM-1478, Sht 2/2 | Bill-of-Material for 24-Assembly HI-STAR 100 PWR MPC | *13* |
| *BM-2898* | *Bill-of-Material for 24-Assembly HI-STAR 100 PWR MPC-24E. Sheet 1* | *1* |
| *BM-2899* | *Bill-of-Material for 24-Assembly HI-STAR 100 PWR MPC-24E. Sheet 2* | ~~*1*~~*2* |
| BM-1479, Sht 1/2 | Bill-of-Material for 68-Assembly HI-STAR 100 BWR MPC | *12* |
| BM-1479, Sht 2/2 | Bill-of-Material for 68-Assembly HI-STAR 100 BWR MPC | *15* |
| BM-1575, Sht 1/2 | *Bill-of-Materials* HI-STORM 100 Storage Overpack | 8 |
| BM-1575, Sht 2/2 | *Bill-of-Materials* HI-STORM 100 Storage Overpack | 8 |
| ~~*BM-1819, Sht 1/1*~~ | ~~*Bills-of-Materials for HI-STAR 100 System Failed Fuel Canister*~~ | ~~*1*~~ |
| BM-1880, Sht 1/2 | Bill-of-Material for 125 Ton HI-TRAC | *7* |
| BM-1880, Sht 2/2 | Bill-of-Material for 125 Ton HI-TRAC | *5* |
| BM-1928, Sht 1/1 | Bill-of-Material for 125 Ton HI-TRAC Transfer Lid | *7* |
| BM-2145 Sht 1/2 | Bill-of-Material for 100 Ton HI-TRAC | *4* |
| BM-2145 Sht 2/2 | Bill-of-Material for 100 Ton HI-TRAC | *3* |
| BM-2152 Sht 1/1 | Bill-of-Material for 100 Ton HI-TRAC Transfer Lid | *5* |
| ~~*BM-3065*~~ | ~~*Bill-of-Material for HI-STORM 100S*~~ | ~~*0*~~ |
| ~~*BM-3066*~~ | ~~*Bill of Material for HI-STORM 100S*~~ | ~~*0*~~ |
| *BM-3189* | *Bill-of-Material for HI-STORM 100A* | *2* |

~~Notes: 1. The HI-STAR 100 MPCs are identical to the MPCs used in the HI-STORM 100 System.~~

# APPENDIX 1.B: HOLTITE ™ MATERIAL DATA
~~(Total of 20 Pages Including This Page)~~

The information provided in this appendix describes the neutron absorber material, Holtite-A ~~*(also known commercially as NS-4-FR)*~~ for the purpose of confirming its suitability for use as a neutron shield material in spent fuel storage casks. *Holtite-A is one of the family of Holtite neutron shield materials denoted by the generic name Holtite™. It is currently the only neutron shield material approved for installation in the HI-STAR 100 cask. It is chemically identical to NS-4-FR* which was originally developed by Bisco Inc. and used for many years as a shield material with $B_4C$ or Pb added.

~~*NS-4-FR*~~ *Holtite-A* contains aluminum hydroxide ($Al(OH)_3$) in an epoxy resin binder. Aluminum hydroxide is also known by the industrial trade name of aluminum tri-hydrate or ATH. ATH is often used commercially as a fire-retardant. ~~*hence the "FR" designation in NS-4-FR. NS-4-FR*~~ *Holtite-A* contains approximately 62% ATH supported in a typical 2-part epoxy resin as a binder. Holtite-A ~~*the Holtec International version of NS-4-FR,*~~ contains 1% *(nominal)* by weight $B_4C$, a chemically inert material added to enhance the neutron absorption property. Pertinent properties of Holtite-A are listed in Table 1.B.1.

The essential properties of Holtite-A are:

1. the hydrogen density (needed to thermalize neutrons),
2. thermal stability of the hydrogen density, and
3. the uniformity in distribution of $B_4C$ needed to absorb the thermalized neutrons.

ATH and the resin binder contain nearly the same hydrogen density so that the hydrogen density of the mixture is not sensitive to the proportion of ATH and resin in the ~~*NS-4-FR*~~ *Holtite-A* mixture. $B_4C$ is added ~~*(1% in Holtite-A)*~~ as a finely divided powder and does not settle out during the resin curing process. Once the resin is cured (polymerized), the ATH and $B_4C$ are physically retained in the hardened resin. ~~*Analysis*~~ *Qualification testing* for $B_4C$ throughout a column of Holtite-A has confirmed ~~*(Holtec International qualification tests)*~~ that the $B_4C$ is uniformly distributed with no evidence of settling or non-uniformity. Furthermore, an excess of $B_4C$ is specified in *the* Holtite-A *mixing and pouring procedure* as a precaution to assure that the $B_4C$ concentration is always adequate throughout the mixture.

~~*NS-4-FR material has been extensively tested for thermal stability, as indicated in the following documents (copies of these documents are attached).*~~

- ~~*Letter dated 4/20/87 from Mr. Larry Dietrick, Bisco Products to Mr. Tod Lesser, NAC International, "Weight loss of NS-4-FR under extreme temperature conditions"*~~
- ~~*"Experimental Studies On Long-Term Thermal Degradation of Enclosed Neutron Shielding Resin", Asano, Ryoji and Nagao Niomura*~~
- ~~*"Thermal Testing of Solid Neutron Shielding Materials", Boonstra, Richard H.*~~

~~*The specific gravity specified in Table 1.B.1 does not include an allowance for weight loss. The specific gravity specified in Chapter 1 includes a 4% reduction to conservatively account for potential weight loss at the design temperature of 300°F. However,. the BISCO letter dated 4/20/87 provides information stating that samples had been exposed to a continuous temperature of 338°F for 146 days and a maximum of 3.15% weight loss had been experienced. Thus, there is a substantial level of conservatism in the Holtec allowance for weight loss.*~~

*The specific gravity specified in Table 1.B.1 does not include an allowance for weight loss. The specific gravity assumed in the shielding analysis includes a 4% reduction to conservatively account for potential weight loss at the design temperature of 300°F or an inability to reach theoretical density.* Tests on the stability of Holtite-A were ~~*also*~~ performed by Holtec International. *The results of the tests are summarized in Holtec Reports HI-2002396, "Holtite-A Development History and Thermal Performance Data" and HI-2002420, "Results of Pre- and Post-Irradiation Test Measurements." The information provided in these reports demonstrates that Holtite-A™ possesses the necessary thermal and radiation stability characteristics to function as a reliable shielding material in the HI-STAR 100 overpack.*

~~*The paper entitled "Experimental Studies on Long-Term Thermal Degradation of Enclosed Neutron-Shielding Resin" provides information which corroborates the information provided in the BISCO letter dated 4/20/87. The paper suggests that enclosures of the NS-4-FR material can further decrease the percent weight reduction at elevated temperatures*~~. The ~~*NS-4-FR*~~ *Holtite-A* is encapsulated in the HI-STAR 100 overpack and, therefore, should experience a very small weight reduction during the design life of the HI-STAR 100 System. ~~*It should be noted that the shielding analysis conservatively assumes 4% loss in density.*~~

~~*The paper entitled "Thermal Testing of Solid Neutron Shielding Materials" provides information regarding NS-4-FR material stability during a fire accident. Results of the study suggests that NS-4-FR could withstand a fire accident with minimal damage. This data is provided for information only, as the post accident shielding analysis very conservatively assumes complete degradation of the Holtite-A neutron shield and replaces the neutron shield with a void.*~~

The data and test results ~~*presented here*~~ confirm that *Holtite-A remains stable under design thermal and radiation conditions, the material properties meet or exceed that assumed in the shielding analysis, and the $B_4C$ remains uniformly distributed with no evidence of settling or non-uniformity.*

~~*1. Holtite-A with 1% $B_4C$ is thermally stable, has the same thermal stability and characteristics as the previously approved NS-4-FR material,*~~

~~*2. The hydrogen density meets or exceeds minimum NS-4-FR specifications (measured at 0.105 $gH_2$/cc compared to the NS-4-FR specification of 0.096 $gH_2$/cc), and*~~

~~*3. The $B_4C$ is uniformly distributed, with no evidence of settling or non-uniformity.*~~

Based on the information described above, Holtite-A meets all of the requirements for an acceptable neutron shield material. ~~*in the manner of NS-4-FR, which was licensed previously in Docket No. 71-9235 (NAC-STC).*~~

Table 1.B.1

*REFERENCE* PROPERTIES OF HOLTITE-A NEUTRON SHIELD *MATERIAL*

| **PHYSICAL PROPERTIES** ~~*(Reference: NAC International Brochure)*~~ | |
|---|---|
| % ATH | 62 *nominal* ~~*maximum (confirmed by Holtec in independent analyses)*~~ |
| Specific Gravity | 1.68 g/cc *nominal* |
| ~~*Thermal Conductivity*~~ | ~~*0.373 Btu/hr/ft °F*~~ |
| Max. Continuous Operating Temperature | 300°F |
| ~~*Specific Heat*~~† | ~~*0.39 Btu/lb °F*~~ |
| Hydrogen Density | 0.096 g/cc minimum ~~*(confirmed by Holtec in independent analyses)*~~ |
| Radiation Resistance | Excellent |
| ~~*Ultimate Tensile Strength*~~ | ~~*4,250 psi*~~ |
| ~~*Tensile elongation*~~ | ~~*0.65%*~~ |
| ~~*Ultimate Compression Strength*~~ | ~~*10,500 psi*~~ |
| ~~*Compression Yield Strength*~~ | ~~*8,780 psi*~~ |
| ~~*Compression Modulus*~~ | ~~*561,000 psi*~~ |
| **CHEMICAL PROPERTIES (Nominal)** | |
| wt% Aluminum | 21.5 ~~*(confirmed by Holtec)*~~ |
| wt% Hydrogen | 6.0 ~~*(confirmed by Holtec)*~~ |
| wt% Carbon | 27.7 |
| wt% Oxygen | 42.8 |
| wt% $B_4C$ | ~~*up to 6.5 (Holtite-A uses 1% $B_4C$)*~~ *1.0* |

† ~~*BISCO Products Data from Docket M-55, NAC-STC* FSAR~~.

*PAGES 1.B-4 THROUGH 1.B-20 INTENTIONALLY DELETED*

## APPENDIX 1.D: Requirements on HI-STORM 100 Shielding Concrete

### 1.D.1 Introduction

The HI-STORM 100 overpack utilizes plain concrete for neutron and gamma shielding. While most of the shielding concrete used in the HI-STORM 100 overpack is installed in the annulus between the concentric structural shells, smaller quantities of concrete are also present in the pedestal shield and the overpack lid. Because plain concrete has little ability to withstand tensile stresses, but is competent in withstanding compressive and bearing loads, the design of the HI-STORM 100 overpack places no reliance on the tension-competence of the shielding concrete. ACI 318-95 provides formulas for permissible compressive and bearing stresses in plain concrete which incorporate a penalty over the corresponding permissible values in reinforced concrete. The formulas for permissible compressive and bearing stresses set forth in ACI 318-95 are used in calculations supporting this TSAR in load cases involving compression or bearing loads on the overpack concrete. However, since ACI 318-95 is intended for commercial applications and the overpack concrete is designated as an ITS Category B material, it is necessary to invoke provisions of ACI 349 (85) (which is sanctioned by NUREG-1536) for all requirements except for the allowable stress formulas (which do not exist in ACI 349) and load combinations. This appendix provides a complete set of criteria applicable to the plain concrete in the HI-STORM 100 overpack.

### 1.D.2 Design Requirements

The primary function of the plain concrete is to provide neutron and gamma shielding. As plain concrete is a competent structural member in compression, the plain concrete's effect on the performance of the HI-STORM overpack is included. The formulas for permissible compressive and bearing stresses set forth in ACI 318-95 are used. However, as plain concrete has very limited capabilities in tension, no tensile strength is allotted to the concrete.

The steel structure of the HI-STORM overpack provides the strength to meet all load combinations specified in Chapters 2 and 3. Credit for the structural strength of the plain concrete is limited to the compressive load carrying capability of the concrete in calculations appropriate to handling and transfer operations, and to demonstrate that the HI-STORM 100 System continues to provide functional performance in a post-accident environment. Therefore, the load combinations provided in ACI 349 and NUREG-1536, Table 3-1 are not applied to the plain concrete.

The shielding performance of the plain concrete is maintained by ensuring that the allowable concrete temperature limits are not exceeded. The thermal analyses for normal and off-normal conditions demonstrate that the plain concrete does not exceed the allowable long term temperature limit provided in Table 1.D.1. Under accident conditions, the bulk of the plain concrete in the HI-STORM overpack does not exceed the allowable short term temperature limit provided in Table 1.D.1. Any portion of the

plain concrete which exceeds the short term temperature limit under accident conditions is neglected in the post-accident shielding analysis and in any post-accident structural analysis.

### 1.D.3 Material Requirements

Table 1.D.1 provides the material limitations and requirements applicable to the overpack plain concrete. These requirements are drawn from ACI 349 (85) supplemented by the provisions of NUREG 1536 (page 3-21) and standard good practice. *Two different minimum concrete densities are specified for the overpack concrete, based on the presence or absence of the steel shield shell.*

### 1.D.4 Construction Requirements

The HI-STORM 100 overpack is composed of a steel structure ~~which~~ *that* houses plain concrete. The steel structure acts as the framework for the pouring of the concrete. The steel structure defines the dimensions of the concrete which ensures that the required thickness of concrete is provided. The fabrication sequence for the HI-STORM 100 overpack as it pertains to the concrete is provided below. All item numbers are taken from *the design drawings*~~Drawings 1495 and 1561 provided~~ in Section 1.5. All nomenclature is taken from bill*s*-of-material ~~BM-1575 which is provided~~ in Section 1.5.

The steel structure of the HI-STORM 100 overpack body is assembled at a qualified steel fabrication facility. However, the top plate (Item 9) is not welded to the overpack inner and outer shells (Items 3 and 2, respectively); likewise, the pedestal shell (Item 5) is welded to the baseplate (Item 1), but the pedestal platform (Item 24) is not welded to the pedestal shell. The steel structure of the overpack body is transported to the reactor site or a nearby concrete facility.

Once the steel structure of the body is received, the body will be inspected to ensure the steel structure meets the requirements of Sections 5.1 and 6.1 of ACI 349. The concrete shall be mixed, conveyed, and deposited in accordance with Sections 5.2 through 5.4 of ACI 349. Sufficient rigidity in the steel structure overpack body is provided such that all the concrete may be placed in a single pour into each of the four segments formed by the inner shell (Item 3), outer shell (Item 2), and radial plates (Item 14). If more than one pour is performed, the requirements of Section 6.4 of ACI 349 must be met for construction joints. The pedestal shell may require bracing and support in accordance with Section 6.1 of ACI 349 to maintain the proper position and shape.

Mixing and placing of the concrete shall follow the guidance of Sections 5.6 and 5.7 for cold and hot weather conditions, respectively. Consolidation of the plain concrete shall be performed in accordance with ACI 309-87. As no reinforcement is placed in the concrete, the possibility of voids is greatly diminished. Curing of the concrete shall be in accordance with Section 5.5 of ACI 349, except that accelerated curing in accordance with Section 5.5.3 is not permitted. The water curing method shall be utilized in

accordance with ACI 308-92, Standard Practice for Curing Concrete.

After curing, non-shrink grout shall be applied as necessary to account for any shrinkage of the concrete elevation. Then, the top plate (Item 9) is welded to the overpack inner and outer shells (Items 3 and 2, respectively) and the pedestal shell (Item 5) is welded to the pedestal platform (Item 24).

To fabricate the overpack lid an identical process is followed. The lid shell (Item 7) is welded to the lid bottom plate (Item 6) and the inner and outer shield block shells (Items 27 and 26, respectively) are welded to the lid top plate (Item 10). The overpack lid is transported to the reactor site or a nearby concrete facility. The lid will be inspected to ensure the structure meets the requirements of Sections 5.1 and 6.1 of ACI 349. The concrete shall be mixed, conveyed, and deposited in accordance with Sections 5.2 through 5.4 of ACI 349. Sufficient rigidity in the overpack lid is provided such that all the concrete may be placed in a single pour. If bracing and support is required, it shall be provided in accordance with Section 6.1 of ACI 349 to maintain the proper position and shape. If more than one pour is performed, the requirements of Section 6.4 of ACI 349 must be met for construction joints.

Mixing and placing of the concrete for the lid shall follow the guidance of Sections 5.6 and 5.7 for cold and hot weather conditions, respectively. Curing of the concrete shall be in accordance with Section 5.5 of ACI 349, except that accelerated curing in accordance with Section 5.5.3 is not permitted. The water curing method shall be utilized in accordance with ACI 308-92, Standard Practice for Curing Concrete. After curing, the lid shell (Item 7) is welded to the lid top plate (Item 10) and the shield block ring (Item 20) is welded to the inner and outer shield block shells (Items 27 and 26, respectively).

Table 1.D.1 provides the construction limitations and requirements applicable to the overpack plain concrete. These requirements are drawn from ACI 349 (85).

### 1.D.5 Testing Requirements

Table 1.D.2 provides the testing requirements applicable to the overpack plain concrete. These requirements are drawn from ACI 349 (85).

Table 1.D.1: Requirements on Plain Concrete

| ITEM | APPLICABLE LIMIT OR REFERENCE |
|---|---|
| Density *in overpack body* (Minimum) | 146 lb/*ft*$^3$ ~~cubic feet~~ *(HI-STORM 100), 155 lb/ft*$^3$ *(HI-STORM 100S)* |
| *Density in lid and pedestal (Minimum)* | *146 lb/ft*$^3$ |
| Specified Compressive Strength | 4,000 psi (min.) |
| Compressive and Bearing Stress Limit | Per ACI 318-95 |
| Cement Type and Mill Test Report | Type II; Section 3.2 (ASTM C 150 or ASTM C595) |
| Aggregate Type | Section 3.3 (including ASTM C33( Note 2)) |
| Nominal Maximum Aggregate Size | 3/4 (inch) |
| Water Quality | Per Section 3.4 |
| Material Testing | Per Section 3.1 |
| Admixtures | Per Section 3.6 |
| Air Content | 6%[1] (Table 4.5.1) |
| Maximum Water to Cement Ratio | 0.5 (Table 4.5.2) |
| Maximum Water Soluble Chloride Ion Cl in Concrete | 1.00 percent by weight of cement (Table 4.5.4) |
| Concrete Quality | Per Chapter 4 of ACI 349 |
| Mixing and Placing | Per Chapter 5 of ACI 349 |
| Consolidation | Per ACI 309-87 |
| Quality Assurance | Per Holtec Quality Assurance Manual, 10 CFR Part 72, Appendix G commitments |
| Maximum Local Temperature Limit Under ~~*Normal and Off normal*~~ *Long Term* Conditions | 200°F (See Note 3) |
| Maximum ~~Local~~ *Section Average* Temperature Limit Under ~~*Accident*~~ *Short Term* Conditions | 350°F (Appendix A, Subsection A.4.2) |
| Aggregate Maximum Value[2] of Coefficient of Thermal Expansion (tangent in the range of 70°F to 100°F) | 6E-06 inch/inch/°F (NUREG-1536, 3.V.2.b.i.(2)(c)2.b) |

Notes:

1. All section and table references are to ACI 349 (85).

2. The coarse aggregate shall meet the requirements of ASTM C33 for class designation 1S from Table 3. However, if the requirements of ASTM C33 cannot be met, concrete that has been shown by special tests or actual service to produce concrete of adequate strength and durability meeting the requirements of Tables 1.D.1 and 1.D.2 is acceptable in accordance with ACI 349 Section 3.3.2.

3. The 200 °F long term temperature limit is specified in accordance with Paragraph A.4.3 of ACI 349 for normal conditions. The 200 °F long term temperature limit is based on (1) the use of Type II cement, specified aggregate criteria, and the specified compressive stress in Table 1.D.1, (2) the relatively small increase in long term temperature limit over the 150°F specified in Paragraph A.4.1, and (3) the very low maximum stresses calculated for normal and off-normal conditions in Section 3.4 of this FSAR.

---

1 This limit is specified to accommodate severe exposure to freezing and thawing (Table 4.5.1).

2 The following aggregate types are a priori acceptable: limestone, dolomite, marble, basalt, granite, gabbro, or rhyolite. The thermal expansion coefficient limit does not apply when these aggregates are used. Careful consideration shall be given to the potential of long-term degradation of concrete due to chemical reactions between the aggregate and cement selected for HI-STORM 100 overpack concrete.

Table 1.D.~~1~~2: *Testing* Requirements ~~on~~*for* Plain Concrete

| TEST | SPECIFICATION |
|---|---|
| Compression Test | ASTM C31, ASTM C39, ASTM C192 |
| Air Content | ASTM C231 |
| Unit Weight (Density) | ASTM C138 |
| Maximum Water Soluble Chloride Ion Concentration | Federal Highway Administration Report FHWA-RD-77-85, "Sampling and Testing for Chloride Ion in Concrete" |