Main Menu

EXIT

OFFICE OF CIVILIAN RADIOACTIVE WASTE MANAGEMENT
ANALYSIS/MODEL COVER SHEET
Complete Only Applicable Items

1. QA: QA

2. ☒ Analysis — Check all that apply	3. ☐ Model — Check all that apply
Type of Analysis: ☒ Engineering; ☐ Performance Assessment; ☐ Scientific	**Type of Model:** ☐ Conceptual Model; ☐ Abstraction Model; ☐ Mathematical Model; ☐ System Model; ☐ Process Model
Intended Use of Analysis: ☐ Input to Calculation; ☐ Input to another Analysis or Model; ☒ Input to Technical Document; ☐ Input to other Technical Products	**Intended Use of Model:** ☐ Input to Calculation; ☐ Input to another Model or Analysis; ☐ Input to Technical Document; ☐ Input to other Technical Products
Describe use: Input to Site Recommendation Design	Describe use:

4. Title:
Longevity of Emplacement Drift Ground Support Materials

5. Document Identifier (including Rev. No. and Change No., if applicable):
ANL-EBS-GE-000003 REV 01 ICN 01

6. Total Attachments:
Two

7. Attachment Numbers - No. of Pages in Each:
I-11, II-2

	Printed Name	Signature	Date
8. Originator	David H. Tang	David H. Tang	5/30/01
9. Checker	Edward M. Cikanek	Edward M. Cikanek	5/30/01
10. Lead/Supervisor	Fei Duan	Fei Duan	5/30/01
11. Responsible Manager	Robert Boutin	Robert S. Boutin	5/30/01

12. Remarks:

OFFICE OF CIVILIAN RADIOACTIVE WASTE MANAGEMENT
ANALYSIS/MODEL REVISION RECORD

Complete Only Applicable Items

2. Analysis or Model Title:

Longevity of Emplacement Drift Ground Support Materials

3. Document Identifier (including Rev. No. and Change No., if applicable):

ANL-EBS-GE-000003 REV 01 ICN 01

4. Revision/Change No.	5. Description of Revision/Change
01	This analysis is to update the previous analysis (ANL-EBS-GE-000003 REV 00) to account for related changes in the Ground Control System Description Document, the Monitored Geologic Repository Project Description Document, and updated information on environmental conditions, and candidate ground support materials. Major changes are made in sections on radiation effects: Sections 6.1.3, 6.3.5, and 6.4.3.6 have been rewritten; Attachment I is added; Tables 2 and 3 have been added. In addition, Table 4 and Figures 1 and 2 have been updated to account for a time period of 300 years. Attachment II is added for the calculation of cement grout density.
01/ICN 01	This ICN is to update the previous analysis (ANL-EBS-GE-000003 REV 01) to account for related changes in the Ground Control System Description Document, the Monitored Geologic Repository Project Description Document, updated input information, and environmental conditions. It also provides technical basis on the potential effects of localized liquid phase water on ground support systems during the preclosure period, which was added as Section 6.3.3.3. Section 7.5 TBV/TBD Impact was deleted per AP-3.10Q/Rev. 2/ICN 4. All previous TBV/TBDs have been removed either due to cancellation or input status change in the updated DIRS. Some editorial changes have been made. All changes are indicated by sidebars in the margin. The following list shows the sections that have been revised: 1, 2, 3, 4, 5, 6, 6.1.1, 6.1.2, 6.1.4, 6.2, 6.2.1.1, 6.2.1.2, 6.2.1.3, 6.2.3, 6.3.1.1, 6.3.1.2, 6.3.2.1, 6.3.3, 6.3.3.1, 6.3.3.2, 6.3.4, 6.3.5, 6.3.6, 6.4.1, 6.4.1.1, 6.4.1.4, 6.4.1.5, 6.4.2.1, 6.4.3.2, 6.4.3.4, 6.4.3.5, 6.4.4.2, 6.5.1.1, 6.5.2.1, 6.5.2.2.2, 7, 8, and pp. I-4, I-6, I-7.

CONTENTS

Page

1. PURPOSE 9
   1.1 PURPOSE 9
   1.2 SCOPE 9

2. QUALITY ASSURANCE 10

3. COMPUTER SOFTWARE AND MODEL USAGE 11

4. INPUTS 12
   4.1 DATA AND PARAMETERS 12
   4.2 CRITERIA 16
   4.3 CODES AND STANDARDS 17

5. ASSUMPTIONS 19

6. ANALYSIS 21
   6.1 EMPLACEMENT DRIFT ENVIRONMENTAL CONDITIONS 21
      6.1.1 Temperature 21
      6.1.2 Relative Humidity 23
      6.1.3 Radiation 23
      6.1.4 Ground Water Characteristics at Repository Horizon 25
   6.2 EMPLACEMENT DRIFT GROUND SUPPORT COMPONENTS 25
      6.2.1 Rock Bolt System 25
         6.2.1.1 Rock Bolt Types 26
         6.2.1.2 Characteristics of Fully Grouted Rock Bolts 26
         6.2.1.3 Grout Types 27
      6.2.2 Steel Sets 27
      6.2.3 Candidate Materials for Emplacement Drift 27
   6.3 LONGEVITY OF STEEL 28
      6.3.1 Temperature Effect on Mechanical Properties 29
         6.3.1.1 Strength and Modulus of Elasticity 29
         6.3.1.2 Toughness and Ductility 29
      6.3.2 Thermal Properties 30
         6.3.2.1 Thermal Expansion Coefficient 30
         6.3.2.2 Thermal Conductivity and Specific Heat 30
      6.3.3 Corrosion Assessment 31
         6.3.3.1 Dry Oxidation 31
         6.3.3.2 Humid-Air Corrosion 32
         6.3.3.3 Aqueous Corrosion 34
      6.3.4 Biological Effect 36
      6.3.5 Radiation Effect 37
      6.3.6 Longevity of Steel Ground Support Elements 39
   6.4 LONGEVITY OF CEMENT GROUT 40

6.4.1 Desirable Characteristics of Cement Grout and Its Components 41
6.4.1.1 Cement 42
6.4.1.2 Sand (or Fine Aggregate) 43
6.4.1.3 Water 43
6.4.1.4 Silica Fume 43
6.4.1.5 High Range Water-Reducing Admixture 45
6.4.2 Density, Mechanical and Thermal Properties of Cement Grout 46
6.4.2.1 Density and Mechanical Properties 46
6.4.2.2 Thermal Properties 48
6.4.3 Factors Affecting Longevity of Cement Grout 48
6.4.3.1 Permeability 48
6.4.3.2 Sulfate Resistance 49
6.4.3.3 Thermal Stability of Ettringite 50
6.4.3.4 Carbonation 50
6.4.3.5 Biological Effect 51
6.4.3.6 Effect of Radiation 52
6.4.4 Design Considerations 52
6.4.4.1 Corrosion 53
6.4.4.2 Differential Thermal Expansion 53
6.4.4.3 Creep 53
6.5 LONGEVITY OF MATERIALS FOR EMPLACEMENT DRIFT INVERT 54
6.5.1 Structural Steel 54
6.5.1.1 Material 54
6.5.1.2 Longevity 54
6.5.2 Crushed Rock 54
6.5.2.1 Material 54
6.5.2.2 Longevity 55

7. CONCLUSIONS 57
7.1 RECOMMENDED GROUND SUPPORT MATERIALS 57
7.2 LONGEVITY OF STEEL GROUND SUPPORT COMPONENTS 57
7.3 LONGEVITY OF CEMENT GROUT 58
7.4 LONGEVITY OF MATERIALS FOR EMPLACEMENT DRIFT INVERT 59
7.5 UNCERTAINTIES AND RESTRICTIONS 59

8. INPUTS AND REFERENCES 60
8.1 DOCUMENTS CITED 60
8.2 CODES, STANDARDS, REGULATIONS, AND PROCEDURES 65
8.3 SOURCE DATA 67

9. ATTACHMENTS 68

FIGURES

Page

Figure 1. Drift Wall Temperatures for Low Temperature Repository Design 22
Figure 2. Drift Wall Temperatures for Various Ventilation Scenarios for SR Design 22
Figure 3. Estimated Penetration Depths of Dry Oxidation for Carbon Steel 33
Figure 4. Illustrative Example of Humid-Air Corrosion Depths for Carbon Steel 34

TABLES

Page

Table 1. Thickness Data for Typical Steel Ground Support Components 14
Table 2. Compositions and Densities used in MCNP4B Calculation 15
Table 3. Important Quantities for Radiation Damage Assessment 24
Table 4. Estimated Penetration Depths of Dry Oxidation for Carbon Steel (µm) 33
Table 5. Estimated Penetration Depths of Aqueous Corrosion for Carbon Steel (mm) 36
Table 6. Typical Chemical and Compound Composition of Portland Cements 44
Table 7. Typical Chemical Analysis for Type E-1(K) Cement 44
Table 8. Standard Chemical Requirements for Expansive Cement 44
Table 9. Physical Requirements for Expansive Cement 45
Table 10. Chemical Requirements for Silica Fume 45

INTENTIONALLY LEFT BLANK

ACRONYMS AND ABBREVIATIONS

ACI	American Concrete Institute
AISC	American Institute of Steel Construction
ANS	American Nuclear Society
ANSI	American National Standards Institute
AREA	American Railway Engineering Association
ASTM	American Society for Testing and Materials
CPU	Central Processing Unit
CRWMS M&O	Civilian Radioactive Waste Management System Management and Operating Contractor
C_2S	Dicalcium silicate
C_3S	Tricalcium silicate
C_3A	Tricalcium aluminate
C_4AF	Tetracalcium aluminoferrite
C-S-H	calcium silicate hydrate
DBTT	Ductile-Brittle Transition Temperature
DOE	U.S. Department of Energy
DTN	data tracking number
EDA	Enhanced Design Alternative
E_n	neutron kinetic energy
GWd	gigawatt day
HAZ	heat affected zone
MCNP	Monte Carlo N-Particle transport code
MeV	million electron volts
MIC	microbiologically influenced corrosion
MTU	metric tons of uranium
NRC	Nuclear Regulatory Commission
PWR	Pressurized Water Reactor
RH	Relative Humidity
SCS	Software Configuration Secretariat
SQR	Software Qualification Report
SR	Site Recommendation
TBD	To Be Determined

TBV	To Be Verified
VA	Viability Assessment
W/C	water-cement
W/CM	water-cementitious material
WP	waste package

1. PURPOSE

1.1 PURPOSE

The purpose of this analysis is to evaluate the factors affecting the longevity of emplacement drift ground support materials and to develop a basis for the selection of materials for ground support that will function throughout the preclosure period of a potential repository at Yucca Mountain. REV 01 ICN 01 of this analysis is developed in accordance with AP-3.10Q, Analyses and Models, Revision 2, ICN 4, and prepared in accordance with the *Technical Work Plan for Subsurface Design Section FY 01 Work Activities* (CRWMS M&O 2001a). The objective of this analysis is to update the previous analysis (CRWMS M&O 2000a) to account for related changes in the *Ground Control System Description Document* (CRWMS M&O 2000b), the *Monitored Geologic Repository Project Description Document*, which is included in the *Requirements and Criteria for Implementing a Repository Design that can be Operated Over a Range of Thermal Modes* (BSC 2001), input information, and in environmental conditions, and to provide updated information on candidate ground support materials.

1.2 SCOPE

Candidate materials for ground support are carbon steel and cement grout. Steel is mainly used for steel sets, lagging, channel, rock bolts, and wire mesh. Cement grout is only considered in the case of grouted rock bolts. Candidate materials for the emplacement drift invert are carbon steel and granular natural material.

Materials are evaluated for the repository emplacement drift environment based on the updated thermal loading condition and waste package design.

The analysis consists of the following tasks:

- Identify factors affecting the longevity of ground support materials for use in emplacement drifts.
- Review existing documents concerning the behavior of candidate ground support materials during the preclosure period.
- Evaluate impacts of temperature and radiation effects on mechanical and thermal properties of steel. Assess corrosion potential of steel at emplacement drift environment.
- Evaluate factors affecting longevity of cement grouts for fully grouted rock bolt system. Provide updated information on cement grout mix design for fully grouted rock bolt system.
- Evaluate longevity of materials for the emplacement drift invert.

2. QUALITY ASSURANCE

REV 01 ICN 01 of this analysis was prepared in accordance with AP-3.10Q, *Analysis and Models*, and in accordance with the *Technical Work Plan for Subsurface Design Section FY 01 Work Activities* (CRWMS M&O 2001a, p. 6). This work activity has been evaluated in accordance with AP-2.21Q, *Quality Determinations and Planning for Scientific, Engineering, and Regulatory Compliance Activities*, Revision 1, ICN 0 BSCN 001, and is subject to QA controls (CRWMS M&O 2001a, pp. A12 and A13). The QAP-2-3, *Classification of Permanent Items*, evaluation entitled *Classification of the MGR Ground Control System* has identified the ground control system at emplacement drifts as Quality Level 2 (QL-2) (CRWMS M&O 1999d, p. 7 of 9, Table 1).

Per Section 8 of the *Technical Work Plan for Subsurface Design Section FY 01 Work Activities* (CRWMS M&O 2001a) a Record Road Map is not required, and per page B7 of B17 of the same reference there is no electronic management of data required in this calculation.

Since this analysis is subject to quality assurance controls, any new to-be-verified (TBV) and to-be-determined (TBD) information will be tracked in accordance with AP-3.15Q, *Managing Technical Product Inputs*.

3. COMPUTER SOFTWARE AND MODEL USAGE

The computer code MCNP4B Version 4B2LV (STN: 30033 V4B2LV) (CRWMS M&O 1998f) (Briesmeister 1997) is used to perform the dose and fluence calculations in the ground support materials, namely cement grout for rock bolts and A 36 carbon steel for the steel sets. The drift geometry, materials, and radiation sources are input into MCNP4B to simulate the environment inside a full emplacement drift (see detailed discussions in Attachment I). The code then calculates the neutron and gamma doses and associated neutron fluence impinging on the drift walls by utilizing various Monte Carlo particle transport techniques. The input and output files for the MCNP4B runs and associated spreadsheets were archived and submitted as a separate record package for this analysis (CRWMS M&O 2000c).

The approach used to perform the radiation calculations does not develop a "model" as defined in the OCRWM procedure AP-3.10Q Rev 2, ICN 4. However, the engineering software used, MCNP4B, contains mathematical models that utilize the widely accepted Monte Carlo method of radiation transport. This method uses established models of particle interaction with matter, such as Compton scattering, pair production, and nuclear fission, to calculate dose and fluence quantities. Validation of these processes involves examination of the basic physical laws or models. It should be pointed out that MCNP4B represents over half a century of research and development and is the industry standard for radiation shielding and dose calculations. Moreover, rigorous validation must be conducted by the developers before the release of the program. Therefore, the underlying mathematical models are determined valid as long as their intended use is within the range of validation.

MCNP4B was obtained from the Software Configuration Management (SCM) in accordance with the AP-SI.1Q procedure, *Software Management* and run on a Pentium PC with CPU # 112111. The use of MCNP4B in this calculation is appropriate per the applications and capabilities of the code and is used within the range of validation in the MCNP4B Software Qualification Report (SQR) (CRWMS M&O 1998a).

4. INPUTS

4.1 DATA AND PARAMETERS

4.1.1 The typical chemical compositions for Type K cement is from DTN: MO9912SEPMKTDC.000.

4.1.2 Radiation Sources

The radiation sources are taken directly from *PWR Source Term Generation and Evaluation* (CRWMS M&O 1999l). The sources correspond to the assembly type, uranium loading, initial enrichment, fuel burnup and age listed on pages 7 and 24 of this reference, which have the following characteristics:

Assembly Type:	B&W Mark B PWR assembly
Uranium Loading:	475 kg
Initial ^{235}U enrichment:	5.0%
Fuel Burnup:	75 GWd/MTU
Fuel Age:	5 years since reactor discharge

A fuel assembly with these characteristics has the highest radiation field possible out of all the assemblies in the waste stream. Actually, 21 of these "hot" assemblies could not be loaded into the same waste package because doing so would exceed the waste package thermal limit of 11.8 kW/WP (BSC 2001, Section 5.2.13, p. 5-11). However, the goal of this calculation is to determine the maximum radiation field impinging on the ground support material (as opposed to calculating worker doses or designing shielding). Therefore the use of this assembly in a 21-PWR waste package is appropriate and conservative.

The neutron and gamma sources (in units of particles/s-assembly) are taken from the electronic files *PWR.neutron.source* and *PWR.gamma.source* contained in Attachment IV of *PWR Source Term Generation and Evaluation* (CRWMS M&O 1999l). Sources for ten different fuel ages (5, 30, 55, 80, 100, 130, 150, 200, 250, and 300 years) were used to determine the time dependent radiation fields. Since the fuel is assumed to be 5 years old, these ages correspond to 0, 25, 50, 75, 95, 125, 145, 195, 245, and 295 years post-emplacement. Attachment IV of this reference does not contain data points for all fuel ages, therefore the time interval used in this analysis is irregular.

4.1.3 Physical Dimension for Radiation Calculation

The following dimensions are used in the radiation calculation:

Emplacement drift diameter:	5.5 m (see Section 4.2.8)
Tuff wall thickness:	30 cm

	Basis: 30 cm is sufficient to account for all backscattered radiation. This thickness has been used previously in *Emplacement Drift Shielding Calculation* (CRWMS M&O 1999m, p. 21)
Drift and WP length:	infinite (see Assumption 5.10) Basis: This is an approximation often used with MCNP4B to help reduce the statistical error.
Inner WP barrier:	5 cm stainless steel (SS316L) (see Section 4.2.10)
Outer WP barrier:	2 cm Alloy 22 (see Section 4.2.10)
WP internal dimensions:	same as VA WP design (see Assumption 5.7)

4.1.4 Not used.

4.1.5 The average composition of chloride, sulfate, bicarbonate as HCO_3^-, and pH of infiltrating water above the potential repository horizon are 117.5, 116, and 208 mg/l, and 8.04, respectively (DTN: LB0101DSTTHCR1.001).

4.1.6 Strength and Modulus of Elasticity of Steel

The yield point of structural steel generally decreases linearly from its value at 20 °C to about 80 percent of that value at 430 °C, and to about 70 percent at 540 °C (Merritt 1983, p. 9-67). The modulus of elasticity of structural steel decreases from an initial value of 200 GPa (29,000 ksi) at room temperature (i.e., about 20 °C) to about 172 GPa (25,000 ksi) at 480 °C (Merritt 1983, p. 9-67).

4.1.7 Toughness and Ductility of Steel

At 200 °C the notch toughness (in terms of impact energy) of steel with 0.11-percent carbon is about six times that of steel with 0.80-percent carbon. At 100 °C the notch toughness (in terms of impact energy) of a steel with 0.11-percent carbon is about 20 times that of a steel with 0.80-percent carbon. At 85 °C the notch toughness (in terms of impact energy) of a steel with 0.11-percent carbon is about 25 times that of a steel with 0.80-percent carbon. (ASM International 1990, p. 739, Fig. 9).

4.1.8 Thermal Expansion Coefficient

Structural steels have a range of coefficients of thermal expansion varying from about 11.24×10^{-6}/°C at 25 °C to 11.61×10^{-6}/°C at 85 °C, 11.71×10^{-6}/°C at 100 °C and 12.32×10^{-6}/°C at 200 °C (Merritt 1983, p. 9-67, Eq. 9-75). The mean thermal expansion coefficient of saturated tuffs for the TSw2 formation vary from 7.14×10^{-6}/°C at 25-50 °C to 7.46×10^{-6}/°C at 75-100 °C, to 9.07×10^{-6}/°C at 100-125 °C, and 13.09×10^{-6}/°C at 175-200 °C (DTN: MO0004RIB00035.001).

4.1.9 Thermal Conductivity and Specific Heat of Steel

The thermal conductivity of carbon steel (grade 1025) for temperatures of 0 to 200 °C

range from 51.9 to 49.0 W/m·K (ASM International 1990, p. 197). The specific heat of carbon steel (grade 1025) for temperatures of 50 to 200 °C range from 486 to 519 J/kg·K (ASM International 1990, p. 198).

4.1.10 Thickness Data for Typical Steel Ground Support Components

Typical thickness data for the steel ground support components are shown in Table 1 with the source (i.e., reference) of the data listed in the table.

Table 1. Thickness Data for Typical Steel Ground Support Components

Type	Dimension	Thickness (mm)	Remark	Source of Data
Steel Set	W 6 x 20	6.60	Web Thickness	AISC 1997, p. 1-32
	W 8 x 31	7.24	Web Thickness	AISC 1997, p. 1-32
Steel Invert	W 8 x 48	10.16	Web Thickness	AISC 1997, p. 1-32
	W 8 x 67	14.48	Web Thickness	AISC 1997, p. 1-32
	W 12 x 40	7.49	Web Thickness	AISC 1997, p. 1-28
	W 12 x 65	9.91	Web Thickness	AISC 1997, p. 1-28
Rock Bolt	Hollow Bar	10.85	Williams bolt B7X	WFEC[a] 1997, p. 8
	Steel tube	2.29	For split set bolt	Peng 1986, p. 228
Bearing Plate	--	9.53	For commonly used bolts	Peng 1986, p. 174
	--	13.0	For Williams bolt R7S	WFEC[a] 1997, p. 38
Wire Mesh	#5 gage	5.26	Wire diameter	AISC 1997, p. 6-2
	#1 gage	7.19	Wire diameter	AISC 1997, p. 6-2
Steel Channel	C 8 x 11.5	5.59	Web thickness	AISC 1997, p. 1-40
Steel Panel	1/4" plate	6.35	Steel plate thickness	AISC 1997, p. 1-107

[a] Williams Form Engineering Corporation.

4.1.11 Material Properties for Radiation Calculation

Table 2 contains the compositions and densities for the materials used in the radiation calculation.

Table 2. Compositions and Densities used in MCNP4B Calculation

	Fuel Region[a]	Inner Barrier[b]	Outer Barrier[c]	Air Gap[d]	Fuel Basket[e]	Tuff Wall[f]	Steel Sets[g]
Material	Smeared	SS316L	Alloy C-22	Air	Borated Steel	Dry Tuff	A 36 Carbon Steel
Density (g/cc)	3.0431	7.9497	8.69	0.001225	8.0038	2.21	7.859[h]
Al	0	0	0	0	0.133	6.513	0
B-10	0	0	0	0	0.077	0	0
B-11	0	0	0	0	0.351	0	0
C	0	0.03	0.01	0	0.043	0	0.26
Ca	0	0	0	0	0	0.322	0
Co	0	0	2.5	0	0	0	0
Cr	0.017	17.00	22.0	0	20.686	0	0
Cu	0	0	0	0	1.499	0	0
Fe	0.035	65.545	3.0	0	39.27	0.682	99.25
H	0	0	0	0	0	0	0
K	0	0	0	0	0	2.641	0
Mg	0	0	0	0	0	0.077	0
Mn	0	2.0	0.5	0	1.336	0.035	0
Mo	0	2.5	13.0	0	2.836	0	0
N	0.005	0.1	0	80.0	0.033	0	0
Na	0	0	0	0	0	2.909	0
Ni	0	12.00	55.53	0	32.505	0	0
O	10.54	0	0	20.0	0	49.863	0
P	0	0.045	0.02	0	0.015	0.004	0.04
S	0	0.03	0.01	0	0.03	0	0.05
Si	0	0.75	0.08	0	0.584	36.898	0.40
Sn	0.244	0	0	0	0	0	0
Ti	0	0	0	0	0.6	0.056	0
U-235	3.601	0	0	0	0	0	0
U-238	68.419	0	0	0	0	0	0
V	0	0	0.35	0	0	0	0
W	0	0	3.0	0	0	0	0
Zr	17.140	0	0	0	0	0	0
Total	100	100	100	100	100	100	100

[a] From CRWMS M&O 1997b, pp. II-4 and II-5. As per Section 5.6, the composition has been altered to that of fresh fuel by removing ^{239}Pu, ^{240}Pu, ^{241}Pu, and ^{236}U and replacing the removed weight percent with enriched uranium (5.0% ^{235}U). The smeared fuel density and light element weight percents remain the same.

[b] From Van Konynenburg et al. 1995, pp. 23 & 25. [c] From Haynes International 1997, pp. 3 & 13. [d] From Weast 1985, pp. F-149 & F-150. [e] From CRWMS M&O 1997b, p. II-6.

[f] From Wilder 1993, p. 37. The composition has been converted to element weights by percentages. The tuff density is that of TSw2(Tptpll), from Table 5 of CRWMS M&O 2000i.

[g] From ASTM A 36/A 36M-00a. 2000, Table 2, p. 2.

[h] From ASM 1978, p. 145.

4.2 CRITERIA

Appropriate criteria or requirements governing the development of the subject document are presented in this section. The major sources for these criteria are from *Ground Control System Description Document* (CRWMS M&O 2000b), and *Requirements and Criteria for Implementing a Repository Design that can be Operated Over a Range of Thermal Modes* (BSC 2001).

4.2.1 The ground support system provides structural support for the subsurface repository opening (CRWMS M&O 2000b, Section 1.1.1).

4.2.2 The ground support system shall use materials having acceptable long-term effects on waste isolation (CRWMS M&O 2000b, Section 1.2.2.1.2).

4.2.3 The ground support in the repository will be carbon steel (steel sets and/or rock bolts and mesh) (BSC 2001, Section 5.2.6, p. 5-10; CRWMS M&O 2000b, Section 1.2.1.4). Cementitious grout will be used to anchor the rock bolts, where necessary (BSC 2001, Section 5.2.6, p. 5-10; CRWMS M&O 2000b, Section 1.2.1.5).

4.2.4 The invert along the bottom of drifts shall be constructed of a carbon steel frame with granular natural material used as ballast (BSC 2001, Section 5.2.8, p. 5-10).

4.2.5 The WP surface temperature shall be maintained below 85 °C (low end of range) (BSC 2001, Section 5.1.1.3, p. 5-1).

4.2.6 The repository shall remain open for up to 300 years following final waste emplacement, with appropriate monitoring and maintenance, and could allow closure of the repository 30 years following final waste emplacement (BSC 2001, Section 5.1.1.1, p. 5-1, CRWMS M&O 2000b, Section 1.2.2.2.2). The system shall have an operational life up to 175 years (CRWMS M&O 2000b, Section 1.2.2.2.4).

4.2.7 The approximate emplacement drift spacing shall be 80 m – drift center to center (BSC 2001, Section 5.2.1, p. 5-8).

4.2.8 The excavated emplacement drift diameter shall be nominally 5.5 m (BSC 2001, Section 5.2.5, p. 5-10).

4.2.9 The repository design shall ensure that the maximum emplacement drift wall temperature, shall not exceed 96 °C during normal preclosure operations, nor, at any position or any time, exceed 200 °C (BSC 2001, Section 5.2.24, p. 5-12).

4.2.10 The radiation calculation uses the waste package having inner barriers of nominally 50 mm thick nuclear grade 316 stainless steel and an outer barrier of nominally 20 mm thick Alloy 22 material (BSC 2001, Section 5.2.12, p. 5-11).

4.2.11 The repository system (in combination with appropriate shielding and ventilation) shall allow limited-time personnel access, in consideration of workers' radiation protection,

into the emplacement drifts, only for the purpose of evaluating and remediating operational upset conditions after initiation of waste emplacement (BSC 2001, Section 5.3.2, p. 5-13).

4.3 CODES AND STANDARDS

Codes and standards applicable to this analysis of the longevity of emplacement drift ground support materials are listed in the following:

4.3.1 American Institute of Steel Construction (AISC)

Manual of Steel Construction: *Allowable Stress Design*, 9th Edition, 1997.

4.3.2 American Society for Testing and Materials (ASTM)

ASTM A 36/ A 36M-00a	*Standard Specification for Carbon Structural Steel*, 2000
ASTM A 82-97a	*Standard Specification for Steel Wire, Plain, for Concrete Reinforcement*, 1998
ASTM A 185-97	*Standard Specification for Steel Welded Wire Fabric, Plain, for Concrete Reinforcement*, 1997
ASTM A 572/ A 572M-00a	*Standard Specification for High-Strength Low-Alloy Columbium-Vanadium Structural Steel,* 2001
ASTM C 88-99a	*Standard Test Method for Soundness of Aggregates by Use of Sodium Sulfate or Magnesium Sulfate*, 1999
ASTM C 117-95	*Standard Test Method for Materials Finer Than 75 µm (No. 200) Sieve in Mineral Aggregates by Washing*, 1998
ASTM C 127-88 (Reapproved 2001)	*Standard Test Method for Specific Gravity and Absorption of Coarse Aggregate*, 1988
ASTM C 131-96	*Standard Test Method for Resistance to Degradation of Small-Size Coarse Aggregate by Abrasion and Impact in the Los Angeles Machine*, 1998
ASTM C 142-97	*Standard Test Method for Clay Lumps and Friable Particles in Aggregates*, 1998
ASTM C 150-00	*Standard Specification for Portland Cement*, 2000
ASTM C 494/ C 494M-99a	*Standard Specification for Chemical Admixtures for Concrete,* 1999

ASTM C 535-96 *Standard Test Method for Resistance to Degradation of Large-Size Coarse Aggregate by Abrasion and Impact in the Los Angeles Machine*, 1998

ASTM C 845-96 *Standard Specification for Expansive Hydraulic Cement*, 1996

ASTM C 1240-00 *Standard Specification for Use of Silica Fume as a Mineral Admixture in Hydraulic-Cement Concrete, Mortar, and Grout*, 2000

ASTM D 4791-99 *Standard Test Method for Flat Particles, Elongated Particles, or Flat and Elongated Particles in Coarse Aggregate*, 1999

ASTM F 432-95 *Standard Specification for Roof and Rock Bolts and Accessories*, 1995

4.3.3 American Concrete Institute (ACI)

ACI 201.2R-92 (Reapproved 1997) *Guide to Durable Concrete*, 2000

ACI 222R-96 *Corrosion of Metals in Concrete,* 1997

ACI 223-98 *Standard Practice for the Use of Shrinkage – Compensating Concrete*, 1998

4.3.4 American Railway Engineering Association (AREA)

Manual for Railway Engineering, Volume 1, 1997.

4.3.5 American National Standards Institute/American Nuclear Society (ANSI/ANS)

ANSI/ANS-6.4-1997 *Nuclear Analysis and Design of Concrete Radiation Shielding for Nuclear Power Plants*, 1997

5. ASSUMPTIONS

The following assumptions were made in order to perform the analysis.

5.1 Not used.

5.2 The highest average percolation rates for matrix and fracture flow in the potential repository are assumed to be 10 mm/year and 25 mm/year, respectively (used in Section 6.1.4).

Rationale: Based on matrix and fracture flux shown in DTN: MO9901YMP98020.001 and DTN: MO9901YMP98017.001, respectively, the assumed values are upper bounding values, therefore, no further confirmation is needed.

5.3 It is assumed that the relative humidity (RH) values for dry oxidation, humid-air corrosion, and aqueous corrosion for carbon steel are less than 60 percent, 60 to 80 percent, and 85 to 100 percent, respectively (CRWMS M&O 1998b, pp. 3-5 to 3-7) (used in Section 6.3.3).

5.4 The specific gravity values of silica fume and Type K expansive cement are 2.2 and 3.12, respectively (used in Attachment II).

Rationale: The specific gravity of silica fume is generally in the range of 2.10 to 2.25 (Kosmatka and Panarese 1994, p. 69). Since this reference is commonly used in the concrete and cement industry, it is reasonable to assume the value to be 2.2 (approximate average of the range). The specific gravity value of Type K cement is from the only manufacturer in the U.S. (Russell 2000), which is reasonable to be assumed. Results of the radiation analysis, which use input based on these specific gravity values, are not sensitive to possible variations in the specific gravity values.

5.5 It is assumed that the relative humidity (RH) in the emplacement drifts will range from 3 to 40% during the preclosure period (used in Sections 6.1.2, 6.3.3.2, and 6.3.3.3).

Rationale: The monitored relative humidity at a typical station (Station 34+86) in the ESF Main Drift ranges from about 8 to 45%, with RH less than 40% for a cumulative frequency of 99.42% (DTN: MO0104SPATEM00.001). Since relative humidity decreases as the temperature increases and the temperatures in emplacement drifts will be higher than those at the ESF Main Drift, it is reasonable to assume the maximum relative humidity to be at 40%. The interpolated relative humidity is 2.30% for temperature at 96 ^{o}C based on the predicted relative humidity values at various temperatures (CRWMS M&O 1997a, p. V-8). It is conservative to assume the lower bound of the relative humidity to be at 3 %.

5.6 The material composition for the fueled region of the waste package is that of fresh fuel (5.0 percent enriched for the maximum fuel assembly as discussed in Section 4.1.2) as opposed to spent fuel.

Rationale: This is a commonly used conservative assumption since fresh fuel yields slightly higher neutron fluxes. This effect is from the production of extra fission neutrons due to the higher percentage of fissile ^{235}U still present in the fuel matrix.

5.7 The waste package internal dimensions are the same as the VA waste package design (used in Section I.1.2.1).

Rationale: The radial dimensions of the fuel area, basket liner, and air gap are based on the B&W Mark B PWR fuel assembly for both the VA and SR waste packages. The dimensions used are from *MGDS Subsurface Radiation Shielding Analysis* (CRWMS M&O 1997b, p. 75).

5.8 Neutron radiation effects on A 36 structural steel relative to the change in Reference Temperature, or ΔRT_{NDT}, are assumed to be similar to reactor pressure steel (used in Section 6.3.5).

Rationale: Reactor pressure vessel material, as represented by grades SA-302, 336, 533, and 508 steel are all low carbon body-centered-cubic (bcc) types of steel similar to grade A 36. This is further justified by using recommended conservative values for copper content and nickel content in the calculation of changes in transition temperature (Regulatory Guide 1.99 1988, p. 1.99-3).

5.9 The typical chemical compositions for silica fume is assumed based on DTN: MO9912DTMKCCOF.000 (used in Table I-1).

Rationale: The information in DTN: MO9912DTMKCCOF.000 shows typical chemical compositions in silica fume from the production of various types of silicon alloys. Since there is no final design for silica fume in cement grout, it is reasonable to make the above assumption.

5.10 For MCNP calculations, the axial length of the shielding model is assumed to be infinite (used in Section 4.1.3).

Rationale: The axial length of the source region (i.e., fuel assembly) is sufficiently long, relative to the distance from the source to the dose points of interest. Furthermore, an infinite model results in slightly higher dose rates than a finite model. Therefore, this assumption is conservative, and no further confirmation of this assumption is required.

6. ANALYSIS

The methodology used in this analysis is to evaluate the factors affecting the longevity of emplacement drift ground support materials during the preclosure period. By reviewing existing documents concerning the performance of candidate ground support materials and evaluating their behaviors under emplacement drift environment, a basis for selection of materials for ground support is provided.

This analysis does not provide estimates of any of the Factors or Potentially Disruptive Events as per the Screening Criteria for Grading of Data attachment in AP-3.15Q and should be assigned level 3 importance.

6.1 EMPLACEMENT DRIFT ENVIRONMENTAL CONDITIONS

In order to evaluate the longevity of ground support materials during the preclosure period, it is necessary to understand the environmental conditions that the emplacement drifts will be subjected to during this period. In this section, the most important environmental conditions in emplacement drifts, i.e., temperature, relative humidity, water chemistry and radiation are presented.

6.1.1 Temperature

An unventilated emplacement drift, upon waste emplacement, will experience increases in temperature from the heat output from the waste packages. The drift wall temperatures will increase due to thermal radiation from the waste packages. Within the rock mass, heat flow will occur primarily by conduction due to the thermal gradient between the high-temperature drift wall and the low-temperature rock further away from the drift.

Based on Section 4.2.9, the system shall ensure that the maximum emplacement drift wall temperature, shall not exceed 96 °C during the preclosure operation, nor, at any position or at any time, exceed 200 °C. It is also indicated in Section 4.2.5 that the WP surface temperature shall be maintained below 85 °C. Since the scope of this analysis is limited to the preclosure period (see Section 1.1), the maximum emplacement drift wall temperature shall not exceed 96 °C. For the low temperature repository design, the maximum drift wall temperature shall not exceed 85 °C since the maximum WP surface temperature is maintained below 85 °C.

For the low temperature repository design, forced ventilation at 15 m^3/s is applied in the first 50 years following start of waste emplacement, followed by natural ventilation at 3 m^3/s for 50 to 100 years and 1.5 m^3/s for 100 to 300 years. Figure 1 (DTN: MO0105MWDTHE05.009) shows the drift wall temperatures for such a case. The drift wall temperature peaks at about 55 °C during the first 50 years and increases to a peak at about 65 °C for the period of 50 to 100 years and remains above 60 °C for the period of 100 to 300 years. The peak drift wall temperature during the 300-yr preclosure is about 67 °C at 150 years after waste emplacement. It is clear that the drift wall temperatures meet the requirement of maximum drift temperature of 96 °C during the preclosure period (Section 4.2.9). Figure 2 (DTN: MO0105MWDTHE05.009) shows the drift wall temperatures for the base case in the Site Recommendation design, in which a line load

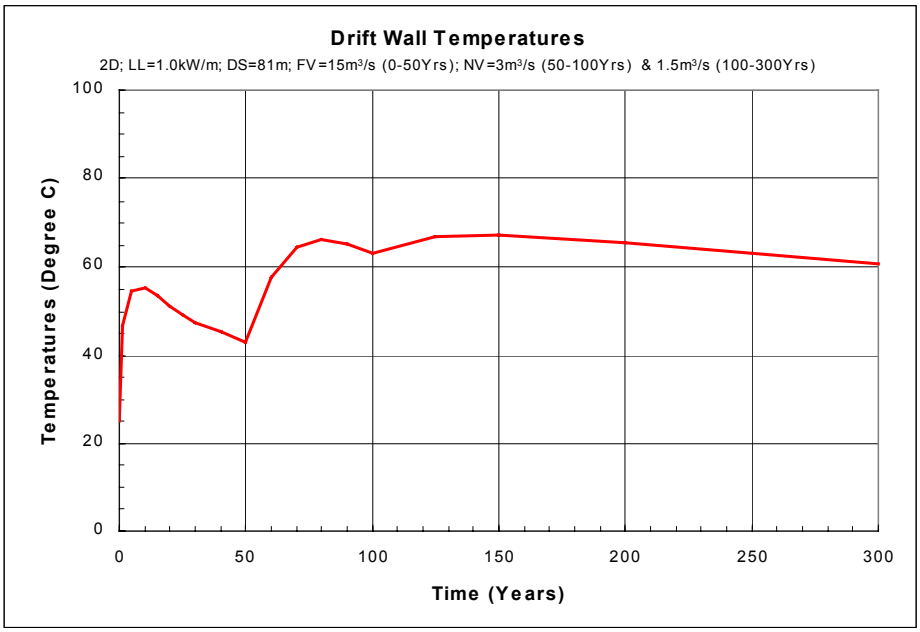

Note: 2D=Two-Dimensional;LL=Line Load; DS=Drift Spacing; FV=Forced Ventilation; NV=Natural Ventilation

Figure 1. Drift Wall Temperatures for Low Temperature Repository Design

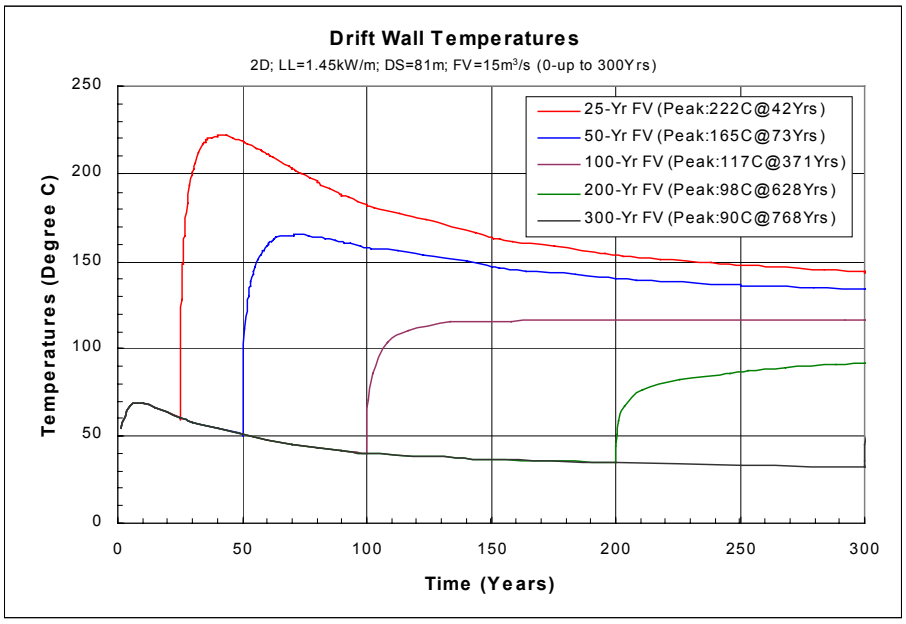

Note: 2D=Two-Dimensional;LL=Line Load; DS=Drift Spacing; FV=Forced Ventilation

Figure 2. Drift Wall Temperatures for Various Ventilation Scenarios for SR Design

of 1.45 kW/m (in contrast with 1.0 kW/m in the low temperature design) is used in the thermal analysis.

There are five ventilation scenarios shown in Figure 2, which are 25, 50, 100, 200, and 300 years of forced ventilation during the preclosure period. In all the cases, forced ventilation of 15 m^3/s is used in the analysis. As can be seen clearly from this figure, the drift wall temperatures from the scenarios with 200-yr and 300-yr ventilation are below 96 °C during the 300-yr period whereas in the other three cases temperatures increase rapidly to above 96 °C after closure (i.e., end of forced ventilation). For the scenario with 300-yr ventilation, the drift wall temperatures are between 50 °C and 60 °C for approximately 50 years and drop below that for the remaining years. For the scenario with 200-yr ventilation, the drift wall temperatures are the same as those for the 300-yr ventilation during the 200-yr period and increase rapidly to approximately 90 °C at year 300. It is clear from this figure that in order to meet the drift wall temperature criteria during the 300-yr preclosure period, forced ventilation with 15 m^3/s needs to be provided for about 200 years after start of waste emplacement.

6.1.2 Relative Humidity

The relative humidity (RH) in an emplacement drift varies with location and time, and depends on the temperature and saturation level in the surrounding rock. Generally speaking, RH is inversely proportional to the former and proportional to the latter. In addition, ventilation will affect the relative humidity greatly. Both in situ rock moisture and water percolation flux through the rock will be removed by the ventilation instead of evaporating and migrating into a cooler rock region as is the case with the unventilated scenario. Since continuous ventilation will be applied in the emplacement drifts, the RH will be relatively low. For example, based on a recent study of repository ventilation for an assumed airflow of 1.0 m^3/s and a water influx of 60 mm/year at a thermal loading of 85 MTU/acre, the highest RH predicted for a 300-year time frame is 23.45 percent (CRWMS M&O 1999g, p. VIII-1 of VIII-1). Since the highest average percolation rate in the repository horizon will be 35 mm/year (see Section 6.1.4), which is lower than the 60 mm/year used in the previously mentioned ventilation study, the RH would be smaller. It should be noted that the RH in the emplacement drifts is assumed to be between 3 to 40 percent during the preclosure period (Assumption 5.5).

It should be noted that the above statement for RH is applicable for steel sets, rock bolt heads, bearing plates, wire mesh, and invert materials that are exposed to the ventilation air. With regard to the drill holes for rock bolts, the relative humidity before cement grout injection should be similar to that within the drift. After the cement grout has been injected and hardened, most of the pores in the hardened grout will be partially filled with water. Any cracks or fractures encountered along the length of the drill hole are expected to be blocked by a grout layer with very low permeability.

6.1.3 Radiation

Radiation hazards from spent nuclear fuel come from different types of radiation including alpha-particles, beta-particles, neutrons, and high-energy photons (gammas and x-rays). Alphas and betas are both stopped completely by the first few millimeters of waste package material and

are therefore unable to affect the ground support. X-rays are rendered harmless by the attenuating effects of the waste package as well. Of major concern are neutrons (with associated secondary gammas) and primary gammas from the fueled region of each spent fuel assembly.

Neutrons and gammas are both neutral particles (having no electrical charge) and are able to penetrate through the waste package inner and outer barriers and impinge on the emplacement drift walls and inverts. Gammas are stopped by dense material through interactions with atomic electrons, while neutrons are only slowed down by nuclear collisions (most efficiently by collisions with light nuclei, such as hydrogen). A percentage of these particles travel through the ground support and deposit their energy using the above mechanisms. Over time, these sub-atomic disruptions can cause changes in the physical properties of metallic and cementitious materials.

The quantities of importance for radiation damage are the absorbed dose and the neutron fluence. Dose is the energy deposited per unit mass of material and is measured in rad, where 1 rad = 0.01 J/kg. This quantity corresponds to a small temperature rise in the ground support. The cumulative neutron fluence (n/cm^2) is important for determining property changes in metallic and, to a lesser extent, cementitious materials. Of major concern is the change in the Ductile-Brittle Transition Temperature (DBTT) in carbon steel, which depends on the cumulative fast neutron fluence (E_n > 1 MeV). The numerical values of these quantities are shown in Table 3 (from CRWMS M&O 2000c) below (note that Attachment I describes how the results in Table 3 were derived). It can be seen that the cumulative gamma dose in the cement grout and the total neutron fluence on the surface of steel sets are 5.89E+7 rad and 6.76E+14 n/cm^2, respectively, at 295 years after waste emplacement.

As it is indicated in Table 3 that the cumulative neutron fluence is far too small to cause any appreciable mechanical damage to carbon steel over the 295-year time period considered (see Section 6.3.5). The neutron fluence is also too small to cause any changes in the mechanical properties of cement grout (see Section 6.4.3.6).

Table 3. Important Quantities for Radiation Damage Assessment

Year[a]	Primary Gamma Dose in Cement Grout		Cumulative Neutron Fluence on Carbon Steel (n/cm^2)	
	Rate (rad/hr)	Cumulative (total rad)	Fast Fluence	Total Fluence
0	373.84	N/A	N/A	N/A
25	67.16	3.57E+07	1.15E+13	3.50E+14
50	34.00	4.63E+07	1.61E+13	4.89E+14
75	18.75	5.19E+07	1.82E+13	5.50E+14
95	11.76	5.45E+07	1.90E+13	5.76E+14
125	5.87	5.68E+07	1.98E+13	5.99E+14
145	3.69	5.76E+07	2.02E+13	6.11E+14
195	1.17	5.85E+07	2.10E+13	6.34E+14
245	0.37	5.89E+07	2.17E+13	6.55E+14
295	0.12	5.89E+07	2.24E+13	6.76E+14

[a] Years after emplacement. Sources for 10 different fuel ages (5, 30, 55, 80, 100, 130, 150, 200, 250, and 300 years) were used to determine the time dependent radiation fields. Since the fuel is assumed to be 5 years old, these ages correspond to 0, 25, 50, 75, 95, 125, 145, 195, 245, and 295 years post-emplacement. The source terms in Attachment IV of CRWMS M&O 1999l do not contain data points for all fuel ages, therefore the time interval used in this analysis is irregular.

6.1.4 Ground Water Characteristics at Repository Horizon

The potential repository horizon is located in a zone of the unsaturated rock within Yucca Mountain. There are two potential pathways for groundwater flow in the unsaturated zone at Yucca Mountain. The first is matrix flow, or the flux of groundwater through the interconnected pores of the rock mass. The second is fracture flow, or the flux of groundwater through fissures in the rock mass. Flow occurs primarily through the matrix in non-welded rocks and through fractures under high percolation conditions in welded rocks. Infiltration associated with precipitation events is assumed to be the only natural source of groundwater in the unsaturated zone in the Yucca Mountain area. Based on Assumption 5.2, the highest average percolation rates for matrix and fracture flow in the repository are 10 mm/year and 25 mm/year, respectively; hence, the highest average overall percolation rate is 35 mm/year. This is conservative because both types of flow do not typically occur at the same location. Although fault zones may be important pathways for groundwater flow, the emplacement drifts in the repository have been designed to avoid identified fault areas. Hydration water from the cement grout for fully grouted rock bolts could be lost at temperatures above boiling but the amount should be of a very small magnitude since a low water/cementitious material ratio is to be used (see Sec. 6.4.1.3).

In assessing the effect of the chemistry of the ground water on the longevity of ground support components, the infiltrating water above the potential repository horizon is considered. The most important characteristics from the infiltrating water related to steel corrosion and cement grout longevity are Cl^-, SO_4^{2-}, HCO_3^-, and pH, the corresponding average values of which are 117.5, 116, and 208 mg/l, and 8.04, respectively (Section 4.1.5).

6.2 EMPLACEMENT DRIFT GROUND SUPPORT COMPONENTS

The ground support in the repository emplacement drifts will be steel sets and/or rock bolts and mesh (Section 4.2.3). With regard to these two major ground support systems, two alternatives for rock bolt systems and four alternatives for steel set lining systems were considered in a ground support evaluation study (CRWMS M&O 1998c, p. 11). They are (1) rock bolts, mesh and channel, (2) rock bolts and shotcrete, (3) steel sets and steel channel lagging, (4) steel sets and wire mesh, (5) steel sets and steel panel lagging, and (6) steel sets and shotcrete. Of these six alternatives, ground support systems with the shotcrete option will not be considered further for two major reasons: a large amount of cementitious materials would need to be used and high thermal stress may be induced in the shotcrete and induce cracks. The cementitious materials will only be used for grout to anchor the rock bolts, where necessary (Section 4.2.3). In this section, only rock bolts and steel sets are discussed. The discussion of inverts is presented in Section 6.5.

6.2.1 Rock Bolt System

A pattern rock bolt system with welded wire fabric has been successfully used in portions of the 7.6-meter-diameter main loop tunnel in the Exploratory Study Facility (ESF). A third of this tunnel was excavated in rock of the proposed repository block, TSw2 unit (CRWMS M&O 1998d, p. 72 of 140). Although the ESF tunnels have not been subjected to the elevated temperatures expected to be present in the repository drifts and the bolts were of a temporary

type, these tunnels provide an initial basis for developing a bolted support system for the repository. Welded wire mesh is usually installed above the spring line, and arched steel channels are used as a continuous bearing plate to secure the mesh across the crown area. Supplemental bolting and mesh below the spring line may also be needed to prevent loose rock from raveling.

6.2.1.1 Rock Bolt Types

There are two basic types of rock bolts in terms of anchorage, those that are point-anchored (mainly mechanical bolts) and those that are fully grouted or full-column supported. The point-anchored bolts are mainly mechanically anchored tensioned bolts whereas fully grouted bolts can be either tensioned or untensioned. Although mechanical bolts are very common in underground mining operations, any factor contributing to the loss of bolt tension will reduce the effectiveness of roof bolting. Mechanical anchors are generally retested periodically to determine if slippage has occurred. Note that the repository system (in combination with appropriate shielding and ventilation) shall allow limited-time personnel access into the emplacement drifts, only for the purpose of evaluating and remediating operational upset conditions (Section 4.2.11). Access to the emplacement drifts would require blast cooling and removal of the waste packages prior to human entry, which would involve considerable time and effort. Hence, mechanical anchors will not be considered further.

Full-column supported bolts develop their support capacities from the friction between the steel tubes and the rock. Split set and Swellex bolts are the main full-column friction types used in underground support. However, because of their thin-walled construction and large surface area, they are more susceptible than conventional bolts to damage by corrosion. For this reason, they are not recommended for long-term use. Fully grouted bolts use either resin or cement as the grouting material (see further discussion in Section 6.2.1.3), with the former commonly used in the mining industry whereas the latter is generally used for civil construction.

6.2.1.2 Characteristics of Fully Grouted Rock Bolts

In general, fully grouted resin bolts have the following advantages (Peng 1986, p. 217):

- Virtually guaranteed anchorage under normal conditions.
- Resistance to both vertical and lateral movements.
- Capability to seal wet holes and exclude air, thereby reducing corrosion of the bolt assembly and weathering of the rock.
- Grout remains effective even with damage to the bolt head, bearing plate, or rock at the collar of the hole.
- Capability to absorb blast vibrations without bleed-off of the bolt load.
- Excellent performance with regard to anchorage creep.

It should be noted that although the above mentioned advantages are addressed for fully grouted resin bolts, it is expected that fully cement-grouted bolts have similar advantages because their reinforcing mechanisms are basically the same. However, it should be pointed out that the above advantages apply to normal underground operations. For the high temperature conditions

expected in an emplacement drift environment, overstress may be induced in the anchor point, bolt steel, bearing plate, or other components, which needs further investigation.

6.2.1.3 Grout Types

The two main types of grouts for anchoring bolts are resin and cement. Although resin grouts have been widely used in the mining industry, there are some disadvantages to this type of material in the proposed repository environment. Most epoxy and polyester resins are suspected of (1) undergoing creep in elevated temperature environment, and (2) experiencing a marked reduction in strength (Leedy and Watters 1994, p. 692) under these conditions. At a temperature of 100°C, the reduction in grout strength for polymer resin is 40 percent (Leedy and Watters 1994, p. 692). At temperatures approaching 200 °C, polymer resins that are epoxy or polymer based have essentially zero strength (Leedy and Watters 1994, p. 692). Another major drawback with resin grouts is that they are of an organic nature, which may favor microbiological activity; therefore, these grouts are not desirable from the long-term postclosure performance viewpoint.

On the other hand, cement grouts only have a slight strength reduction at the elevated temperatures, i.e., 8 and 17 percent, respectively, at 100°C and 200°C (Leedy and Watters 1994, p. 692) (see further discussion in Section 6.4.2.1).

Because the cement grouts have favorable characteristics compared to resin grouts as described above, fully cement grouted bolts are currently being considered as the candidate rock bolt system.

6.2.2 Steel Sets

As indicated in Section 6.2, three configurations of steel set ground support are considered in this study. They are steel sets with steel channel lagging, steel sets with wire mesh, and steel sets with panel lagging. A detailed discussion regarding these three support systems is presented in *Ground Support Alternatives Evaluation for Emplacement Drifts* (CRWMS M&O 1998c, Sections 5.6 to 5.8).

These three types of steel set ground support comprise the proposed all-steel lining for emplacement drift support. The steel sets with heavy wire mesh or channel lagging would be installed in a single-pass operation immediately behind the Tunnel Boring Machine (TBM). For the steel set and panel configuration, it is installed in a two-pass operation. Steel sets are erected at a uniform spacing along the tunnel axis, and then bolted together using tie rods to form a continuous structure along the length of tunnel. The detailed installation process for these three types of ground support is provided in the above mentioned report (CRWMS M&O 1998c, Sections 5.6 to 5.8).

6.2.3 Candidate Materials for Emplacement Drift

During the early development of candidate materials for the steel to be used as the ground support, carbon steel, galvanized steel, and stainless steel were considered. However, based on the current repository design, the ground support will be carbon steel (steel sets and/or rock bolts

and mesh) with granular ballast in the invert (Sections 4.2.3 and 4.2.4). Galvanized steel and stainless steel will not be considered further for the following reasons:

Galvanized steel is considered to protect steel against corrosion in many applications. However, zinc may react with cementitious materials (i.e., concrete and cement grout) to produce hydrogen gas (ACI 222R-96, Section 2.2.6), which is not desirable in the emplacement drifts. If rock bolts were made with galvanized steel, they could react with the cement grout to generate hydrogen gas, which would form bubbles in the grout. This is also not desirable. Moreover, the long-term behavior of this coating under high temperature is not known. Therefore, it is not advisable to apply protective coatings of galvanizing steel to the steel ground support in the emplacement drifts.

Stainless steel is resistant to corrosion over a wide range of water chemistry. However, stainless steel is not the solution to all corrosion problems. Depending on the chemical composition of the steel, and the temperature and chemistry of the environment, it can be subjected to chloride pitting, crevice corrosion and stress corrosion cracking (including hydrogen embrittlement) (Kaiser et al. 1990, p. 56). Thus, stainless steel may not be adequate for all situations anticipated in emplacement drifts. Also, the cost of stainless steel is about three to five times that of the conventional carbon steel, depending on the quantity needed. As is explained below, the corrosion of carbon steel is not expected to be a potential problem for the steel ground support under the expected environmental conditions; therefore, stainless steel will not be considered for emplacement drift ground support in this study.

For ground support made with carbon steel, the following ASTM specifications are proposed:

Steel sets:	A 36 or A 572
Rock bolts:	F 432
Steel wire mesh:	A 185 and A 82.

For the cement grout to be used with rock bolts, the following specifications are proposed:

Cement:	C 845 for expansive hydraulic cement
Silica fume:	C 1240
Superplasticizer:	C 494.

For crushed rock ballast, crushed limestone or marble were considered as candidate materials in the past. Crushed tuff is also considered as a candidate material for the invert because it is compatible with the host rock. The final candidate material for crushed rock ballast has not been determined yet.

6.3 LONGEVITY OF STEEL

Steel materials to be considered for emplacement drift ground control include:

- Structural steel sets (also referred to as steel rings or ribs)
- Rock bolts (including bearing plates and washers)

- Steel mesh (welded wire fabric or chain link mesh), channels, straps, and panels
- Steel invert

Only carbon steel components will be considered in this study.

6.3.1 Temperature Effect on Mechanical Properties

In this section, changes in the mechanical properties of steel materials under elevated temperatures will be briefly discussed.

6.3.1.1 Strength and Modulus of Elasticity

The yield point of structural steel generally decreases linearly from its value at 20 °C to about 80 percent of that value at 430 °C, and to about 70 percent at 540 °C (Section 4.1.6). By interpolation, the calculated values at 200 °C, 100 °C, and 85 °C are about 91, 96, and 97 percent, respectively, of that at 20 °C. The modulus of elasticity of structural steel decreases from an initial value of 200 GPa (29,000 ksi) at about 20 °C to about 172 GPa (25,000 ksi) at 480 °C (Section 4.1.6), or 86 percent of the room-temperature value. Assuming the modulus of elasticity of carbon steel is linearly related to the temperature and using the above mentioned values, the modulus of elasticity will be 189 GPa (27,400 ksi), 195 GPa (28,300 ksi), and 196 GPa (28,420 ksi) at 200, 100, and 85 °C, respectively, which decrease about 5, 2.5, and 2 percent, respectively, in comparison with the value at 20 °C.

The AISC document (AISC 1997, p. 6-3) also notes that the yield strength of carbon steel at about 430 °C is approximately 77 percent of room-temperature strength; at about 540 °C, the yield strength is 63 percent of room temperature strength. Creep is not observed in these steels until temperatures are above 370 °C (ASM International 1990, p. 622).

Based on these data, it is quite likely that the effect of elevated temperature on the strength and modulus of elasticity of carbon steel components is insignificant (i.e., 3 and 2 percent decrease) if the maximum temperature in the emplacement drift is 85 °C and very small (i.e., 9 and 5 percent decrease) if the maximum temperature is 200 °C.

6.3.1.2 Toughness and Ductility

Toughness is the ability of a metal to absorb energy and deform plastically before fracturing. A measure of toughness is notch toughness, which is measured (in joules) by impact testing. Toughness generally decreases as the strength, hardness, and carbon content of the steel increase (ASM International 1990, p. 739, Fig. 9). At 200 °C the notch toughness (in terms of impact energy) of steel with 0.11-percent carbon is about six times that of steel with 0.80-percent carbon. At 100 °C the notch toughness (in terms of impact energy) of a steel with 0.11-percent carbon is about 20 times that of a steel with 0.80-percent carbon. At 85 °C the notch toughness (in terms of impact energy) of a steel with 0.11-percent carbon is about 25 times that of a steel with 0.80-percent carbon (Section 4.1.7). The 0.80-percent carbon steel exhibits the least ductility of the carbon steels. For maximum toughness and ductility, the carbon content should

be kept as low as possible, consistent with strength requirements (ASM International 1990, p. 739, Figure 9).

Steel components that are manufactured based on the standard specification included in the American Society for Testing and Materials ASTM A 36/ A 36M-00a, *Standard Specification for Carbon Structural Steel*, or A 572/A 572M-00a, *Standard Specification for High-Strength Low-Alloy Columbium-Vanadium Structural Steel*, and F 432-95, *Standard Specification for Roof and Rock Bolts and Accessories*, are expected to perform satisfactorily in the anticipated repository environment. Further study and tests are needed to determine the proper compositions of carbon steel to be used as ground support material in the emplacement drift environment.

6.3.2 Thermal Properties

The properties needed to characterize the thermal and thermomechanical behavior of steel include thermal expansion, thermal conductivity, and specific heat. These properties are briefly discussed in this section.

6.3.2.1 Thermal Expansion Coefficient

Structural steels (i.e., carbon steels) have a coefficient of thermal expansion that varies from about 11.24 x 10^{-6}/°C at 25 °C to 11.61 x 10^{-6}/°C at 85 °C, 11.71 x 10^{-6}/°C at 100 °C and 12.32 x 10^{-6}/°C at 200 °C (Section 4.1.8). The thermal expansion coefficient for TSw2 tuff for near-field considerations is shown to vary from 7.14 x 10^{-6}/°C at 25-50 °C to 7.46 x 10^{-6}/°C at 75-100 °C, to 9.07 x 10^{-6}/°C at 100-125°C and 13.09 x10^{-6}/°C at 175-200 °C (Section 4.1.8). These data show that the differences in expansion coefficients between tuff and steel decrease from about 4.1 x 10^{-6}/°C at 25 °C, to about 4.15 x 10^{-6}/°C, 2.64 x 10^{-6} /°C and 0.77 x 10^{-6}/°C at 85, 100, and 200 °C, respectively.

6.3.2.2 Thermal Conductivity and Specific Heat

The average thermal conductivity of carbon steel (grade 1025) for temperatures from 0 to 200 °C is 50.67 W/m·K, based on values ranging from 51.9 to 49.0 W/m·K (Section 4.1.9), with higher values for lower temperatures. The average specific heat of carbon steel (grade 1025) for temperatures from 50 to 200 °C is 502.5 J/kg·K, based on values ranging from 486 to 519 J/kg·K (Section 4.1.9) with higher values for higher temperatures. Based on these data, for temperatures below boiling at emplacement drift wall, the impacts of temperature on thermal conductivity and specific heat of carbon steel are insignificant.

It should be noted that the grade and specification of the carbon steel to be used in the emplacement drifts has not been determined for the proposed repository. The grade 1025 carbon steel is used here to only illustrate the relative values of the parameter of interest and how these values vary with temperature. Further studies need to be conducted to determine the proper grade and specification of the carbon steel to be used for the ground support components.

6.3.3 Corrosion Assessment

One of the most important processes that controls the longevity of steel ground support is corrosion. The assessment of corrosion in this section applies to all steel ground support components, which include steel sets, steel wire mesh, channel lagging, steel panels, rock bolts, bearing plates, steel invert, etc.

The corrosion of steel ground support materials will depend on the properties of the steel materials and the environment in which the ground supports are installed. In this study, only carbon steel will be discussed, based on criteria in Sections 4.2.3 and 4.2.4. Although the important environmental conditions affecting steel corrosion include temperature, RH, water chemistry, and oxygen partial pressure, only temperature and RH will be considered in the evaluation of corrosion potential at emplacement drift environment. The impact of water chemistry on steel corrosion potential is expected to be insignificant during the preclosure period because of: (1) the amount of percolation is very small (Section 5.2), (2) neither pitting nor crevice corrosion is expected to occur since the Cl^- content in the groundwater is low (Section 4.1.5), and (3) the pH value in the groundwater is 8.04 (Section 4.1.5), i.e., slightly above neutral, which will minimize the corrosion potential of the steel.

The RH is generally expressed as the percentage ratio of the water vapor pressure in the atmosphere compared to that which would saturate the atmosphere at the same temperature. It is a very important factor in controlling the corrosion of steel. It is known that there is a critical (or threshold) relative humidity, below which the corrosion rate is generally negligible, but above which corrosion increases noticeably.

Depending on the relative humidity condition of the environment, the corrosion of steel in the emplacement drifts can be categorized as dry oxidation, humid-air corrosion, and aqueous corrosion (CRWMS M&O 1998b, pp. 3-5 to 3-7). The corresponding RH values for these three types of corrosion are generally considered to be in the following ranges: less than 60 percent, 60 to 80 percent, and 85 to 100 percent, respectively (Assumption 5.3). The aqueous condition is equivalent to “immersion” or “bulk water” (CRWMS M&O 1998b, p. 3-7). This is, in general, not expected to occur in emplacement drifts during the preclosure period, especially for the period of the preclosure, in which a very high volume of ventilation (i.e., 15 m^3/s) is applied. Any percolation water (if there is any) will probably be carried away by ventilation. However, in some localized areas of the repository, dripping water from the surrounding rock fractures may have the possibility to contact the steel components of ground support.

6.3.3.1 Dry Oxidation

The dry oxidation of carbon steel would occur when the emplacement drift is under conditions of high temperature and low RH (i.e., less than 60 percent). An empirical equation has been derived for the penetration depth of carbon steel due to this type of corrosion as follows (Stahl et al. 1995):

$$P = 178{,}700 \times t^{0.33} \times e^{-6870/T} \qquad \text{(Eq. 1)}$$

where P is the penetration depth in µm, t is time in years and T is temperature in degrees Kelvin.

Table 4 shows the corrosion penetration depth for a time period of 30 to 300 years with temperatures ranging from 60 to 150 °C, calculated based on Equation 1. Figure 3 presents the results based on Table 4. As can be seen from Table 4 and Figure 3, the estimated corrosion depths under dry oxidation condition are very small; approximately 0.01 µm at 100 °C, and 0.1 µm at 150 °C for a period of 300 years. The impact of dry oxidation on the performance of steel ground support components such as steel sets and rock bolts should be insignificant during the preclosure period of the repository.

6.3.3.2 Humid-Air Corrosion

In general, humid-air corrosion of steel occurs under RH of 60 to 80 percent. The lower limit of this range is much higher than the expected RH (a maximum of 40 percent) in the ventilated emplacement drifts during the preclosure period (Assumption 5.5). However, in presence of dust, oxides, salts or a combination of them, humid-air corrosion can take place at RH values lower than 60 percent (CRWMS M&O 1998b, p. 3-7). Because the emplacement drifts will be continuously ventilated (forced ventilation or natural ventilation), significant amounts of dust will not be present in the drifts. However, in some localized areas of the repository, oxides and salts may accumulate on the surface of some steel components by the precipitation of these salts from the evaporation of ground water from the host rock due to the elevated temperatures generated from waste packages. Therefore, although quite improbable, conditions for humid-air corrosion in some localized areas are possible in the drifts during the preclosure period.

Corrosion depths of steel ground support components under humid-air conditions were broadly approximated using experimental results from tests that investigated the corrosion of waste package materials. A series of long-term corrosion tests have been conducted at Lawrence Livermore National Laboratory (McCright 1998). Although the major purpose of these tests was to investigate the corrosion behavior of waste package materials, the results for the carbon steel corrosion-allowance materials (definition at that time) are used herein to approximate the humid-air corrosion rates of the steel ground support components. In these tests, the two carbon steel corrosion-allowance materials tested were A 516 and cast carbon steel. The test environments closest to the emplacement drift condition are at the vapor phase of simulated dilute J-13 well water at a 10x concentrated solution with temperatures of 60 °C and 90 °C. The one-year corrosion rates (µm/year) for the test results from the two materials under these two temperature conditions are 27, 37, and 56, 39, respectively (McCright 1998, Table 2.2-9). The average of these four values is 40 µm/year.

It should be noted that the relative humidity for the vapor phase within a test chamber is close to 100 percent because it is a closed vessel with dilute solution maintained at elevated temperatures (i.e., 60 °C and 90 °C). However, for emplacement drifts under ventilated conditions, the RH will be at most about 40 percent (see Section 6.1.2), which is below the lower limit for humid-air corrosion (see Section 6.3.3). Although the corrosion rate below RH of 60 percent is believed to be very small compared to that above 60 percent, the actual rate cannot be determined without testing. For illustrative purposes, the values will be assumed to be reduced to one-hundredth, one-tenth, and one-fifth of the corrosion rate with RH above 60 percent (i.e., 40 µm/year) in order to plot the corrosion depths for Corrosion Rates A, B, and C as shown in Figure 4. By

Table 4. Estimated Penetration Depths of Dry Oxidation for Carbon Steel (µm)

T (°C)	30 years	100 years	150 years	300 years
60	0.001	0.001	0.001	0.001
70	0.001	0.002	0.002	0.002
80	0.002	0.003	0.003	0.004
90	0.003	0.005	0.006	0.007
100	0.006	0.008	0.009	0.012
110	0.009	0.013	0.015	0.019
120	0.014	0.021	0.024	0.030
130	0.022	0.032	0.037	0.046
140	0.033	0.049	0.056	0.070
150	0.049	0.072	0.083	0.104

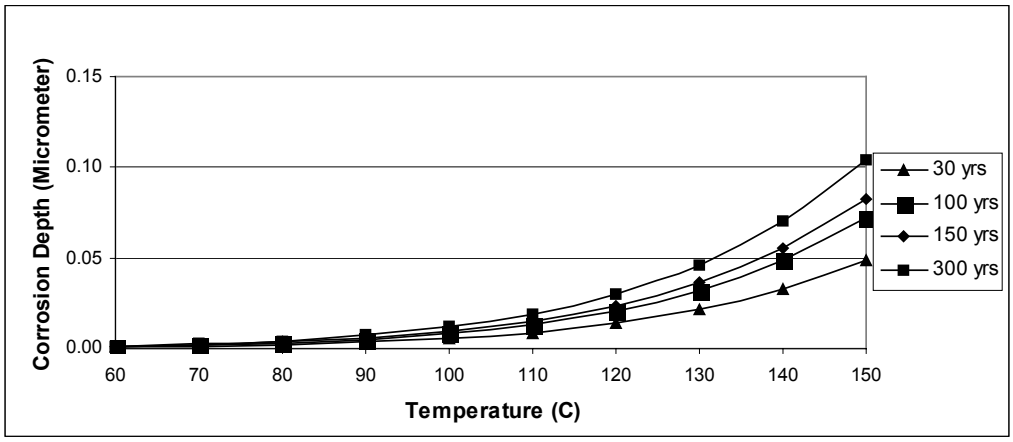

Figure 3. Estimated Penetration Depths of Dry Oxidation for Carbon Steel

comparing Figure 4 and Figure 3, it is clear that the corrosion depths illustrated for humid-air conditions are much greater than those from dry oxidation (i.e., 2.4 mm for humid-air corrosion vs. 0.0001 mm for dry oxidation).

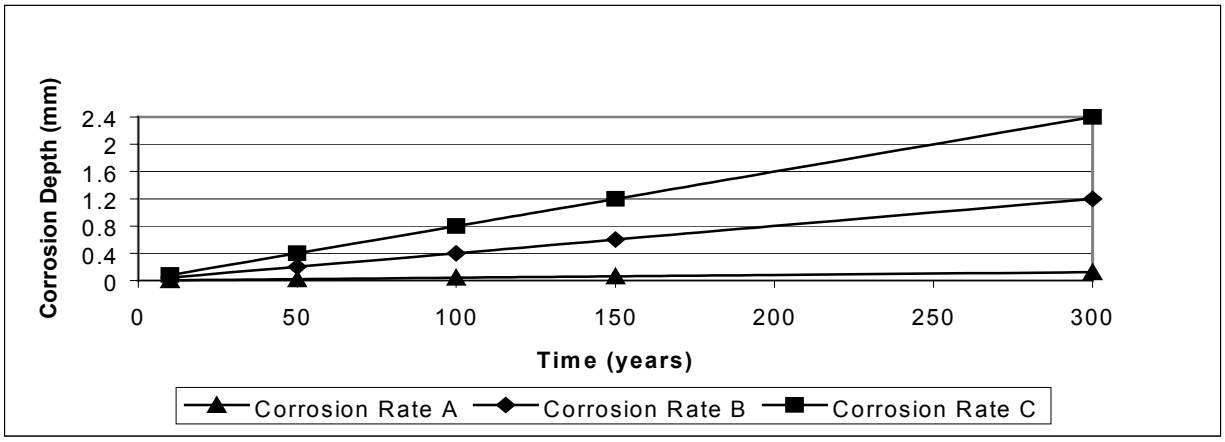

Figure 4. Illustrative Example of Humid-Air Corrosion Depths for Carbon Steel

Table 1 gives some typical thickness data for some steel ground support components (Section 4.1.10). By comparing the thickness data in this table with the corrosion depths depicted from Figure 4, the impact of corrosion on the support components can be derived. For example, if for each component a 10 percent loss of its thickness is the maximum allowance before its strength is compromised, the following would result (assumes all are exposed to air): (1) For Rate A: none would fail within a 300-yr period. (2) For Rate B: none would fail within 30 years. For a 100-yr period, only split set would fail. For a 150-yr period, only split set, wire mesh # 5, and steel channel C 8x11.5 would fail. For a 300-yr period, all components except W 8x67 would fail. (3) For Rate C: split set would fail within 30 years. For a 100-yr period, all components except W 8x48, W 8x67, W 12x65, Williams bolt, and bearing plates would fail. For a 150-yr period, all components except W 8x67 would fail. All components would fail over a time period of 300 years.

It should be emphasized that the above discussions are made merely to illustrate the impact of corrosion on structural components without detailed structural analysis. However, the illustrative example does show the need for systematic studies and tests to accurately estimate the probable humidity in the drifts and to investigate the potential for humid-air corrosion of the ground support system.

6.3.3.3 Aqueous Corrosion

In general, aqueous corrosion is not expected to occur in the emplacement drifts during the preclosure period. The major reason is that the low RH, i.e., a maximum RH of 40 % (Assumption 5.5), and elevated temperature generated by waste packages, will prevent the

occurrence of aqueous corrosion. However, there may exist some potential that this type of corrosion could occur at some localized surface of steel ground support due to its contact with some seepage water from the fractures in the TSw2 host rock.

It should be noted that the seepage of water into drifts is expected to be considerably less than the prevailing percolation flux and may be zero for areas where the percolation flux is lower than the seepage threshold for that location. (CRWMS M&O 2000h, p. x). Also, it is not realistic to predict current and future rates and locations of seepage into drifts because there are insufficient information and inadequate models to accurately predict the spatial and temporal distribution of moisture that will enter drifts in a potential repository at Yucca Mountain (CRWMS M&O 2000h, p. 57). During the preclosure period in which the forced ventilation with 15 m^3/s is applied, any dripping or seepage water will be carried away by the ventilation air. Only during the preclosure period in which natural ventilation with low air quantity, such as 3 m^3/s or less, is applied, there may exist some possibility that the dripping or seepage water will contact some localized spots of steel ground support components, such as areas on the outer side of steel sets in contact with the drift wall.

Two conditions must exist for aqueous phase corrosion: water from seepage or dripping, and RH above the deliquescence point of hygroscopic salts in the water. While the former can occur without the latter condition being met, both conditions are necessary for aqueous phase corrosion. Without this level of RH, no aqueous phase could be sustained on the surface (CRWMS M&O 2000g, p. 3-10).

An empirical equation has been derived for the penetration depth of carbon steel due to general corrosion as follows (Stahl et al. 1995):

$$P = 2{,}525{,}000 \times t^{0.47} \times e^{-2850/T} \qquad \text{(Eq. 2)}$$

where P is the penetration depth in µm, t is time in years and T is temperature in degrees Kelvin.

Table 5 shows the corrosion penetration depth for a time period of 10 to 300 years with temperatures ranging from 60 to 150 °C, calculated based on Equation 2. As can be seen from Table 5, the estimated corrosion depths under aqueous corrosion condition are much greater compared with those of dry oxidation case (see Table 4). For a period of 10 years, the estimated corrosion depths range from 1 to 4 mm for temperatures of 60 to 100 °C. By comparing these corrosion depths from those of Table 1 and considering a maximum allowable thickness loss of 10 percent, all steel components in Table 1 would fail except steel inverts W 8x48 and W 8x67 and Williams bolt B7X for a temperature at 60 °C. If the temperature is 70 °C and above, all steel components in Table 1 would fail in 10 years. For a period of 30 to 300 years, the estimated corrosion depths range from 2 to 6 mm to 7 to 18 mm for temperatures of 60 to 100 °C, respectively.

It should be noted that the above discussion only illustrates an example of the potential impact of aqueous corrosion on the steel components of ground support without a detailed structural analysis. Although the possibility to have aqueous corrosion on the steel components of ground support during the preclosure period is very low, there is a need to further study the potential

effects of localized liquid phase water on ground support systems as well as estimate the location and frequency of their occurrence.

Table 5. Estimated Penetration Depths of Aqueous Corrosion for Carbon Steel (mm)

T (°C)	10 years	30 years	100 years	300 years
60	1	2	4	7
70	2	3	5	9
80	2	4	7	11
90	3	5	9	14
100	4	6	11	18
110	4	7	13	22
120	5	9	16	26
130	6	11	19	31
140	8	13	22	37
150	9	15	26	44

6.3.4 Biological Effect

In the repository environment, many different microbes could grow and provide a plethora of potential chemical processes that may affect the bulk chemistry within the emplacement drifts. Large sources of potential nutrients for microbes are the materials used in the construction of the ground support. The waste-package materials represent reduced metals that can be oxidized to provide energy for microbes to thrive, and the waste forms themselves contain both nutrient and energy sources for microbes (CRWMS M&O 2000f, Sec. 6.3.6, p. 55).

Microbes can thrive over a wide range of pH, under high hydrostatic pressures, in highly saline conditions, and in high radiation conditions that would normally be lethal to humans. Microbes live in nutrient starved environments and can be expected to continue to live even if the nutrient supply of introduced repository materials becomes exhausted. In these nutrient starved environments, some microbes even metabolize CO_2, N_2 and CH_4 directly from the gas phase via autotrophic behavior or methanogenic metabolic processes. Microbes will alter their environment by creating biofilms. Biofilms make it possible for anaerobic microbes to live in aerobic conditions by isolating them from the normal atmospheric conditions in which they would not survive. Biofilms also initiate pitting corrosion on metals via microbiologically influenced corrosion (MIC). Therefore, all microbial influenced redox mineral transformations are possible in a Yucca Mountain repository. Microbes will adhere to mineral surfaces where they are able to utilize available nutrients and energy; otherwise, they can act as colloidal

particles and move through the subsurface via advective-dispersive mechanisms (CRWMS M&O 2000f, Sec. 6.3.6, p. 55).

Over time, the repository environment will have environmental conditions that will favor certain bacteria over others (i.e., thermophiles over mesophiles or acidophiles over neutrophiles). However, microbes should be able to grow and produce their metabolic byproducts only when the temperature is <120°C and the water activity is > 0.90 (i.e., RH > 90%) (CRWMS M&O 2000f, Sec. 6.3.6, pp. 55 and 56).

For the current ground support design, cementitious grout will be used to anchor the rock bolts and its amount will be kept to a minimum (Section 4.2.3). Although superplasticizer is planned to be used in the cement grout, the organic admixtures from superplasticizers (especially long-chain types) in cement grout will probably not be a nutrient supply for microbial activity (see Section 6.4.1.5). Since the emplacement drifts are expected to be dry and low in RH (no greater than 40 percent) during the preclosure, the potential impact for MIC on steel sets will be insignificant below a RH of 90%. For steel bolts in the rock bolt system, since the bolt will be sealed by a grout with very low permeability (see Section 6.4.1), the potential impact of MIC on bolts will be insignificant.

6.3.5 Radiation Effect

Radiation changes in body-centered-cubic ferritic material, such as steel, is a well-known phenomenon that has been studied for many years. These changes are known to result in alterations in mechanical properties, including fracture toughness. The changes are caused by high-energy neutrons that are generally associated with the radiation emanating from nuclear reactors (gamma-ray heating is unimportant in steel). The main concern associated with this is a loss of ductility in the pressure vessel material and a possible loss of structural integrity. Numerous studies have been conducted over the past 40 years that have examined changes in the base vessel material, as well as in the welds and the heat affected zone, or HAZ.

Microscopically, these changes are a result of the displacement of lattice atoms in the crystalline steel structure as well as the introduction of transmuted atoms. The latter are principally the result of [n,α] reactions, where n represents the neutron particle incident on an atom of the steel material and α represents a helium atom that results from the nuclear collision process. Such changes may, in turn, result in changes in the Ductile-Brittle Transition Temperature (DBTT), wherein a shift occurs between brittle and ductile behavior for the material's mechanical properties. The changes in DBTT are determined by testing Charpy V-notch specimens (ASM 1990, p. 659) that have been subjected to specific temperature and irradiation conditions.

Changes in steel are generally observed for fast neutron fluence on the order of 10^{18} n/cm^2 (ASM 1990, p. 659, Figure 7). Past studies on the effects of neutron radiation on steel have focused on nuclear reactor pressure vessel materials and their welds and HAZ; namely, low carbon steel grades SA-302, 336, 533, and 508 having a minimum specified yield strength of 50,000 psi and under. Additionally, the focus has been on irradiation temperature conditions similar to reactor pressure vessels, namely around 288 °C (550° F). A Nuclear Regulatory Commission Regulatory Guide (Regulatory Guide 1.99 1988, entire) has been developed that

enables one to predict changes in DBTT and describes its use with the aforementioned materials and conditions.

The algorithms described in *Radiation Embrittlement of Reactor Vessel Materials* (Regulatory Guide 1.99 1988, Section 1.1) are used below for predicting the changes in material properties for steel grade A 36, which is a typical low-carbon steel used for steel sets and rock bolts. Confidence in the approach used in this calculation is based on the fact that this is the approach recommended in a NRC Regulatory Guide (Regulatory Guide 1.99 1988, entire) which has been used throughout the nuclear industry for the evaluation of radiation effects on steel pressure vessels. Additionally, conservative values have been used to demonstrate that radiation effects on steel ground supports are negligible and that they will be in a ductile temperature regime.

The steel proposed is similar to the material that the *Radiation Embrittlement of Reactor Vessel Materials* (Regulatory Guide 1.99 1988, Section 1.1) research is based upon in as much as it is a low carbon steel; however, the algorithms in this reference do not specify use on A 36 material. The use of the algorithms may only be justified if the radiation is sufficiently low such that the predicted material changes are insignificant. Likewise, the irradiation temperature conditions in the emplacement drifts are substantially less than 288 °C, which is the reference temperature for reactor pressure vessel conditions. The predicted changes in temperatures must likewise be insignificant in order to justify the use of the algorithms.

The change in DBTT (also known as ΔRT_{NDT}) is calculated using the following formula (Regulatory Guide 1.99 1988, p. 1.99-3, Eq. 2):

$$\Delta RT_{NDT} = (CF) \times f^{(0.28 - 0.10 \log f)} \qquad \text{(Eq. 3)}$$

where CF is a chemistry factor that is a function of the copper and nickel content (Regulatory Guide 1.99 1988, p. 1.99-5, Table 2), and $f^{(0.28 - 0.10 \log f)}$ is the neutron fluence factor. The variable (f) is the fluence ratio based on the ratio of the calculated neutron fluence to a reference neutron fluence of 10^{19} n/cm^2, for $E_n > 1$ MeV.

The chemistry of a steel is known to be an important factor in estimating neutron effects on material properties. Specifically, copper and nickel content are identified as the most important chemistry parameters (ASM 1990, p. 659; Regulatory Guide 1.99 1988, p. 1.99-3). The standard of ASTM A 36 indicates only a minimum copper content of 0.20 percent and contains no specification for nickel content. However, in the event that copper and nickel content are not specified, the following values are recommended (values from Regulatory Guide 1.99 1988, p. 1.99-3):

Cu: 0.35 percent; Ni: 1.0 percent

Note that these values are different from those used in the MCNP4B calculations in Section I.1 in Attachment I (see Table I-1); however they are useful and appropriate for this analysis. From Table 2 of *Radiation Embrittlement of Reactor Vessel Materials* (Regulatory Guide 1.99 1988), the chemistry factor CF is found to have a value of 272° F (133°C), based on the recommended

copper and nickel content. Furthermore, based on the calculated fluence (E_n > 1 MeV) at 295 years from Section I.1.2.4 in Attachment I, the neutron fluence ratio is found to be:

$$f = (2.24\times10^{13} \div 1\times10^{19}) = 2.24\times10^{-6},$$

and $$\Delta RT_{NDT} = (272) \times (2.24\times10^{-6})^{(0.28 - 0.10 \log (2.24\times10^{-6}))} = 0.0046\ F°$$

The calculated ΔRT_{NDT} or, equivalently, the change in DBTT for A 36 steel, is found to be only 0.0046 F° (0.003 C°) at 295 years after waste emplacement. Consequently, radiation is not a factor in steel ground support degradation. Furthermore, this small effect may be considered to be insignificant insofar as the DBTT is typically on the order of 10 F° (5.6 C°) or less. Nonetheless, further conservatism may be included to demonstrate that expected repository temperatures will always remain above the DBTT by including the expected standard deviation in ΔRT_{NDT}. This is 28 F° (15.56 C°) for welds (Regulatory Guide 1.99 1988, Section 1.1) which when added to the typical DBTT results in a upper limit of 38 ° F (3.33 °C). This is below the minimum host rock temperature of 77 ° F (25 °C), which is calculated based on average ground surface rock temperature of 18.7 °C and the rock thermal gradient (CRWMS M&O 1999n, Section 5.1.2). This assures that the steel ground supports will remain in the ductile region. It can be concluded that the cumulative neutron fluence is far too small to cause any appreciable mechanical damage to carbon steel over the 295-year time period considered.

6.3.6 Longevity of Steel Ground Support Elements

Based on the above discussions regarding the longevity of the steel ground support components under the expected environment, i.e., elevated temperature (ranging from about 45 °C to the boiling point of water) and low RH (lower than 40 percent), the potential for corrosion of steel sets and other steel components such as wire mesh, channels, panels, nut and bolts for fastening lagging to steel sets, etc., is not anticipated to be significant enough to compromise their structural integrity.

Steel corrosion in mines is usually caused by sulfuric acid generated by the oxidation of ore-bearing and pyritic sulfide phases. This type of aggressive corrosion is not expected in the waste emplacement drifts since no sulfides have been observed in the repository host formation. Per Section 6.3.4, the potentials for MIC in steel sets and steel bolts of the rock bolt system are insignificant below a RH of 90%. Per Section 6.3.5, the effect of radiation on steel will likely be insignificant. In addition, the impacts on mechanical properties including strength, modulus of elasticity, toughness, and ductility of steel due to elevated temperatures are minimal since the maximum temperature at the emplacement drift wall during the preclosure period will be 96 °C (see Section 4.2.9), which is not high enough to cause significant change in the mechanical properties at ambient conditions.

The above conclusion also applies to rock bolt heads and bearing plates, which are made with carbon steel materials. For the majority portion of the rock bolt, which is encapsulated by cement grout and is inside the rock mass, (i.e., not exposed directly to the air), the corrosion potential is reduced even further.

Based on the empirical corrosion rate for carbon steel under dry oxidation, the maximum corrosion depths for temperatures up to 85, 100, and 150 °C for a 300-year period are approximately 0.005, 0.01, and 0.1 µm, respectively (Table 4), which are negligible. Although this dry environment may prevail during the preclosure period, there may be some localized conditions where humid-air corrosion may occur, especially for such a large repository area and a long operational period. It appears that for a time period of 175 years, some of the steel ground support components can be designed to be functional and durable by using the typical thickness data shown in Table 1 whereas some steel components may need to increase their thickness in order to be functional and durable. For the case with a time period of 300 years, which is a provision that supports a deferral of closure, no failure would occur based on the typical thickness data shown in Table 1 for the case of very low corrosion rate (i.e., Rate A in Section 6.3.3.2). For the intermediate corrosion rate (i.e., Rate B in Section 6.3.3.2), all steel components except the W 8x67 steel invert would fail. However, for the high corrosion rate (i.e., Rate C in Section 6.3.3.2), all components would fail over a time period of 300 years. For those situations, either heavier (i.e., thicker) components or different types of materials may be required to meet the ground support functions.

It should be pointed out that an accurate estimate of the longevity of steel ground support components within the emplacement drift is complicated because there is no precedent data from similar ground support components under similar environmental conditions. However, based on the above discussions, the steel ground support components can be designed to be functional and durable during the preclosure period for an operational life up to 175 years, with adequate type, size (thickness), material composition, and method of installation.

Systematic studies, including structural analysis and tests, should be completed to accurately estimate the corrosion depths in humid-air conditions and used in selecting the material types and thickness.

The potential impacts of localized liquid phase water on steel ground support is also discussed. The estimated corrosion depths of steel components under aqueous corrosion are much greater than those of dry oxidation and humid-air corrosion. Although the possibility to have aqueous corrosion on steel components of ground support during the preclosure period is very low, there is a need to further study the potential effects of localized liquid phase water on ground support systems as well as estimate the location and frequency of their occurrence.

6.4 LONGEVITY OF CEMENT GROUT

As discussed in Sections 6.2.1.2 and 6.2.1.3, fully cement-grouted rock bolts, which would perform superior to other types of rock bolts in the emplacement drift environment, are being considered as the candidate rock bolt system. This rock bolt system consists of several components made from two material types: (1) steel (steel bolts and accessories such as bearing plates, washers, and wire mesh) and (2) cement grout that fully grouts the steel bolt.

The issues associated with the longevity of the steel components of the rock bolt system have been discussed in Section 6.3. In this section, the issues associated with the longevity of cement grout are discussed (Section 6.4.3) after introduction of the desirable characteristics of cement

grout and its components (Section 6.4.1) and mechanical and thermal properties of cement grout (Section 6.4.2).

The grout plays a significant role in determining the longevity of the rock bolt system; the integrity of the grout controls the steel bolt-grout-rock bonding capacity and prevents water percolation and steel bolt corrosion. The grout provides the overall protection to the steel bolt and bore hole from damage and deterioration.

It should be pointed out that the degradation of cement grout under the elevated temperature condition in the repository and its interaction with groundwater, steel components of the rock bolt system and other engineered barrier components as well as with radionuclides and with the geosphere is a very complex phenomena. Many processes are coupled in a very complicated manner. To evaluate properly the behavior of cement grout under repository conditions there is a clear need for further systematic research work to improve our understanding of phenomena that may take place in the repository and to provide appropriate data to develop mechanistic and empirical models. Nevertheless, a basic knowledge of the characteristics of the cement grout components is necessary to understand the principal mechanisms that control the grout degradation and its interaction with other components of the rock bolt system. This will be examined first, followed by a discussion of factors affecting the longevity of cement grout. Finally, design considerations for grout in fully grouted rock bolts in terms of longevity will be addressed.

It should be noted that the potential effect of cementitious materials on long-term waste package performance during the postclosure period is not within the scope of this study and will not be included. However, due to the limited volume of cementitious materials and the corrosion resistance of the outer barrier material, no adverse effect on waste package performance is expected.

6.4.1 Desirable Characteristics of Cement Grout and Its Components

Of particular importance to the proper functioning of fully grouted rock bolts in the emplacement drifts is the development of a suitable grout to act as a corrosion barrier for the steel bolt and to retain sufficient strength to maintain the rock reinforcement function with little or no maintenance for a period of up to 175 years. In addition, the grout should have acceptable low hydraulic conductivity, i.e., less than 10^{-12} m/s, which was selected for the cement grout in a Canadian study (Onofrei et al. 1992, p. 137), as well as physical and chemical compatibility with the host environment.

For cement-based grout to perform as a hydrological barrier, it must have a low hydraulic conductivity, be free of cracks, and not shrink under service conditions. Ability to perform over a long term period would require chemical stability under in-situ and expected future conditions and physical stability under combined stress conditions (in-situ and thermal) as well as low reactivity with the rock and groundwater.

6.4.1.1 Cement

Cements that exhibit expansion (called expansive cements) have found wide application in pre-stressed concrete, preventing cracks in concrete due to drying shrinkage, sealing fractures or cracks in rocks, and soil and rock anchoring installation. Because the expansive cement does not exhibit the normal shrinkage that occurs with regular portland cement and it provides a more complete encapsulation of the rock bolts, it was considered for grouts for the steel bolts in emplacement drifts.

When shrinkage-compensating cement is used for grouting the rock bolts in the bolt hole, it will not shrink away from bolts or hole walls after curing. This ensures the maintenance of an intact shroud of grout for enhanced corrosion protection and bonding. Note that this type of cement grout falls in the category of expansive hydraulic cement (also referred to as shrinkage-compensating cement), which conforms to ASTM C 845-96.

Several types of expansive cements based on ettringite formation have been developed and are categorized as Type K, M, or S according to their expansive constituents. Based on ACI 223-98, *Standard Practice for the Use of Shrinkage – Compensating Concrete*, Section 1.4, expansive cement Type K is defined as a mixture of portland cement, anhydrous tetracalcium trialuminate sulfate ($C_4A_3\bar{S}$) (where C = CaO, A = Al_2O_3, and $\bar{S}$ = SO_3), calcium sulfate ($CaSO_4$), and lime (CaO). The $C_4A_3\bar{S}$ is a constituent of a separately burned clinker interground with portland cement, or alternatively, formed simultaneously with portland cement clinker compounds during the burning process. Type M cement is a blend of portland cement, calcium-aluminate cement, and calcium sulfate. Type S cement is a portland cement containing a large computed tricalcium aluminate (C_3A) content and more calcium sulfate than usually found in portland cement (ACI 223-98, Section 1.4).

To produce ettringite, calcium sulfate is used as the source of sulfate ions, whereas different calcium aluminate phases may be used for supplying the aluminum ions. From among the various aluminate phases, tetracalcium trialuminate sulfate ($C_4A_3\bar{S}$) appears to be the most suitable source of aluminum ions for the expansive reaction (ACI 223-98, Sec. 2.1.2, Table 1). Most of this phase hydrates within the desirable time range of several hours to several days, after mixing with water. Therefore, Type K cement was considered as the candidate cement for the grout to be used in the rock bolt system. Type K cement is also the most commonly used expansive cement in the United States.

In this analysis, cement with a 90 percent of solid mass by weight in the cement grout mix is proposed to be used, which is expected to produce adequate strength and durability. The same amount of cement content was used in the study of cement-based grout for a waste disposal facility in Canada (Onofrei et al. 1992, p. 136).

As stated in ACI 223-98, Section 2.1.2, 75 to 90 percent of shrinkage-compensating cements consist of the constituents of conventional portland cement, with added source of aluminate and calcium sulfate. For this reason, the oxide analysis on mill test reports does not differ substantially from the portland cements described in ASTM C 150 except for the larger amounts of sulfate (typically 4 to 7 percent total SO_3) and usually, but not always, a higher percentage of

aluminate (typically 5 to 9 percent total Al_2O_3) (ACI 223-98, Sec. 2.1.2). Table 6 (Kosmatka and Panarese 1994, p. 21) and Table 7 (DTN: MO9912SEPMKTDC.000) show a typical chemical and compound composition of portland cements and typical chemical composition for Type E-1 (K) cement, respectively. The standard chemical and physical requirements of expansive cement based on ASTM C 845-96 are listed in Tables 8 and 9, respectively.

6.4.1.2 Sand (or Fine Aggregate)

In the proposed cement grout, no sand or fine aggregate will be used. This is for ease of pumping, since the annular space between the bolt and hole wall is very small, i.e., about 3 to 10 mm. The presence of fine aggregate will not only separate or tear expensive pump components, but make it difficult to achieve the thixotropic properties of the cement grout, which are preferable for injecting through the hollow bolt and squeezing down along the bolt length.

6.4.1.3 Water

The mixture water used in the shrinkage-compensating cement grout should be of the same quality as that used in portland cement grout. But, the water requirement of shrinkage-compensating cement is greater than that of portland cement for a given consistency (ACI 223-98, Section 2.5.1). To ensure the high strength of the cement grout, a low water-cementitious material (W/CM) ratio of about 0.4 to 0.6 is desirable. The use of a low W/CM ratio in a grout will maximize the density, and consequently minimize porosity and permeability, and may also favor autogeneous sealing (Onofrei et al. 1992, p. 135) of internal or interfacial fractures that could arise from physical disturbance (e.g., movement and stresses of the rock, drying, and shrinkage).

6.4.1.4 Silica Fume

The addition of silica fume to conventional concrete reduces workability, decreases air content, significantly reduces permeability, and increases compressive strength. Silica fume also enhances flexural strength and accelerates early-strength development. It dramatically decreases the rapid chloride permeability of shrinkage-compensating concrete made with Type K cement (Bayasi and Abifaher 1993, pp. 7 & 9). The use of silica fume in Type K expansive cement helps minimize, and possibly prevent, the damage action of excessive expansion, while allowing the necessary expansion (Cohen et al. 1993, p. 29). The expansive cement mixed with silica fume expands at a higher rate during the early stage (first three days) than the cement mortar without silica fume, and the appropriate expansion at an earlier level is preferable because the cement grout is more able to heal itself (Cohen et al. 1993, p. 32).

Silica fume will be used in the cement grout to increase the strength and to reduce the permeability of the grout. An appropriate amount of silica fume; i.e., about 5 to 10 percent by weight of cement, will be used. Condensed silica fume, also known as silica fume or micro-silica, is a by-product of the manufacture of silicon, ferrosilicon, or the like, from quartz and carbon in electric arc furnaces (Day 1995, p. 235). The silicon dioxide (SiO_2) content can vary from 70 to 96 percent, increasing in percentage as the amount of silicon increases in the ferro silicon metal manufactured (Wolsiefer 1991, p. 2). Table 10 shows the required chemical

composition for silica fume based on Table 1, page 2 of ASTM C 1240-00. Silica fume is a superfine material with a particle size of the order of 0.1 micron and a surface area of over 15,000 m^2/kg (a hundred times greater than cement or fly ash) (Day 1995, p. 235).

Table 6. Typical Chemical and Compound Composition of Portland Cements

Types of Portland Cement	Chemical Composition, %						Potential Compound Composition, %			
	SiO_2	Al_2O_3	Fe_2O_3	CaO	MgO	SO_3	C_3S	C_2S	C_3A	C_4AF
Type I	20.9	5.2	2.3	64.4	2.8	2.9	55	19	10	7
Type II	21.7	4.7	3.6	63.6	2.9	2.4	51	24	6	11
Type III	21.3	5.1	2.3	64.9	3.0	3.1	56	19	10	7
Type IV	24.3	4.3	4.1	62.3	1.8	1.9	28	49	4	12
Type V	25.0	3.4	2.8	64.4	1.9	1.6	38	43	4	9

Table 7. Typical Chemical Analysis for Type E-1(K) Cement

Chemical Component	Composition, %
SiO_2	19.4
Al_2O_3	5.2
Fe_2O_3	2.8
CaO	61.9
MgO	1.4
SO_3	6.9
Loss on Ignition at 950 °C	1.1
Na_2O	0.10
K_2O	0.59
SrO	0.05
ZnO	0.02
TiO_2	0.28
P_2O_5	0.10
Mn_2O_3	0.04

Table 8. Standard Chemical Requirements for Expansive Cement

Magnesium oxide (MgO), max	6.0 %
Insoluble residue, max	1.0 %
Loss on Ignition, max	4.0 %

Table 9. Physical Requirements for Expansive Cement

Time of setting, min, minutes	75
Air content, max, vol %	12.0
Required expansion of mortar: 7-day expansion: min, % max, % 28-day percentage of 7-day expansion, max	 0.04 0.10 115
Compressive strength, min: 7-day, psi (MPa) 28-day, psi (MPa)	 2100 (14.7) 3500 (24.5)

Table 10. Chemical Requirements for Silica Fume

SiO_2, min, %	85.0
Moisture Content, max, %	3.0
Loss on Ignition, max, %	6.0

6.4.1.5 High Range Water-Reducing Admixture

Since silica fume is proposed to be used as an admixture to the cement grout, an appropriate amount of high-range water reducer, i.e., superplasticizer, will be needed to increase the workability of the grout at a given W/CM ratio. One of the reasons for pursuing grout mixes with silica fume and superplasticizer is that they exhibit no measurable bleed. A grout mix that will bleed will bond poorly to the rock, which is not desirable.

High-range water reducers conforming to ASTM C 494-99a Type F or G generally reduce water content by 12 to 30 percent (Kosmatka and Panarese 1994, p. 67). By using superplasticizer, it is possible to increase concrete workability and not need any additional water. In addition to improving workability, superplasticizers provide other technical benefits such as production of a stable and dense hydrated cement paste with very low porosity and permeability, and a significant increase in the density and durability of the cement grout, which provides a greater resistance to the penetration of aggressive agents and an improved service life.

There are basically three principal types of superplasticizers on the market: (1) lignosulfonate-based, (2) polycondensate of formaldehyde and melamine sulfonate (often referred to simply as melamine sulfonate), and (3) polycondensate of formaldehyde and naphthalene sulfonate (often referred to as naphthalene sulfonate) (Shah and Ahmad 1994, p. 8).

Of these three types of superplasticizers, the naphthalene superplasticizers have been in use longer than any of the others and are available under a large number of brand names. They are generally available as either calcium salts, or more commonly, sodium salts. The particular advantages of naphthalene superplasticizers, apart from their being slightly less expensive than the other types, appear to be that they make it easier to control the rheological properties of high strength concrete because of their slight retarding action (Shah and Ahmad 1994, p. 9).

There is no *a priori* way of determining the required superplasticizer dosage; it must be determined by a trial and error procedure. For the current study, a preliminary value of 1 percent naphthalene superplasticizer by total mass of cement plus silica fume is used. It should be pointed out that although the use of superplasticizers (organic admixtures) in the potential repository environment may cause other postclosure performance problems related to waste package corrosion and waste isolation, there are reasons that the impact of using superplasticizers in the cement grout in this aspect is insignificant. First, the amount of cement to be used in the rock bolt system is much less than what would be used with that of concrete lining. Based on a recent study (CRWMS M&O 1999h, Page II-2 of II-2), the cement used in the grout for rock bolts is only 1.6 to 18.3 percent of the cement used in concrete lining. These values would be lower if the annulus between drill hole and bolt, and the hole lengths are reduced. Second, the organic admixtures from superplasticizers (especially long-chain types) in cement grout will probably not be a nutrient supply for microbial activity (CRWMS M&O 1998e, p. 28 of 34) because it is difficult for bacteria to break down the long-chain superplasticizers.

It should be noted that the objective of this study is to evaluate the longevity of emplacement drift ground support materials. The final mix design of the cement grout is not within the scope of this study, and therefore, the above proportioning of the ingredients for cement grout is preliminary in nature. The actual proportioning of the cement grout must first be calculated by following the proper procedure. Then, based on trial mixtures using a range of ingredient proportions, and evaluating their effects on strength, water requirements, time of set, and other important properties (e.g., permeability and coefficients of thermal expansion), the optimum proportions can be determined. In particular, the appropriate amount of silica fume and superplasticizer needs further investigation, as the durability and appropriate expansion of cement grout is affected by the amount of silica fume. Some water-reducing admixtures may be incompatible with shrinkage-compensating cement due to acceleration of the ettringite reaction which usually has the effect of decreasing expansion (ACI 223-98, Sec. 2.4.b).

6.4.2 Density, Mechanical and Thermal Properties of Cement Grout

In this section, density, mechanical and thermal properties of cement grout in the emplacement drift environment are presented.

6.4.2.1 Density and Mechanical Properties

The density of the cement grout to be used for fully grouted rock bolts is 1.91 g/cm^3, which is calculated based on 90 percent of cement and 10 percent of silica fume by solid mass, mixed at W/CM ratio of 0.4 (see detailed calculation in Attachment II).

The modulus of elasticity, flexural and compressive strength, and bond strength of shrinkage-compensating cement after expansion has been completed are similar to those of portland cement because 75 to 90 percent of the former consists of the constituents of the latter, with added sources of aluminate and calcium sulfate (ACI 223-98, Sec. 2.1.2).

Compressive strengths of shrinkage-compensating cement (or expansive cement), however, are at least comparable to portland cement manufactured from the same clinker and having the

identical cement contents. For example, depending on water/cement (W/C) ratios, the unconfined compressive strengths of Type K cement grout at 7 days are about 4600 and 6700 psi (32 and 46 MPa) at W/C of 0.44 and 0.40 respectively, and greater than 10,000 psi (69 MPa) for W/C of about 0.38 (Williams Form Engineering Corporation 1995, p. 2).

The unconfined compressive strength of cement grout mixed at W/CM of 0.4 with 90% of cement and 10% of silica fume by solid mass and 1% of superplasticizer is assumed to be 90 MPa. This value is assumed to be valid at curing time of 100 days and older. The same value was shown in the test result of a cement grout with same proportions of cement and silica fume (Onofrei et al. 1993, p. 52, Figure 27b). Although Type 50 cement (i.e., Type V cement in U.S.) used in the test is different from Type K cement proposed in this analysis, the strength result should be similar as long as the compositions of cements are similar and the same W/C ratios are used.

The Young's modulus values of cement grout for the same grout mix design are likely to range approximately between 14 and 18 GPa. This range of values was shown in the test result of a cement grout with similar proportions of cement and silica fume (Onofrei et al. 1993, p. 60, Figure 33). Although Type 50 (i.e., Type V cement in the U.S.) cement used in the test is different from Type K cement proposed in this analysis, the strength result should be similar.

The Poisson's ratio for the proposed cement grout is assumed to range from 0.15 to 0.25. Although these values are listed for concrete (Kosmatka and Panarese 1994, p. 158), they should be applicable to cement grout, especially since Poisson's ratio is generally of no concern to the structural designer for these applications.

In a recent study on materials for emplacement drift ground support (CRWMS M&O1997c, p. 68 of 74), it was concluded that for temperatures up to 200 °C (392 ^{o}F), the compressive strength of concrete can be assumed to be reduced up to 30 percent compared with the ambient temperature strength. For temperatures up to 85 and 100 °C, the reduction in compressive strength will probably be reduced up to 15 and 20 percent, respectively, compared with that at the ambient temperature (CRWMS M&O1997c, p. 19 of 74). In the same report, it was concluded that for temperature of 200 °C (or 392 ^{o}F), and prolonged periods of heating above 100 °C, it is reasonably conservative to assume that the modulus of elasticity of concrete may be reduced about 50 percent compared with the ambient temperature modulus of elasticity (CRWMS M&O1997c, p. 68 of 74). For temperatures up to 85 and 100 °C, the reduction in elasticity values will probably be up to 15 and 20 percent, respectively (CRWMS M&O1997c, p. 22 of 74).

In a recent laboratory test on concrete properties at elevated temperatures, it was concluded that (1) the compressive strength of the concrete mixes investigated appeared to be relatively insensitive to temperature (nominally 10 percent degradation over the range 23 to 200 °C), at least for relative short aging periods, (2) the elastic moduli of the concretes tested were affected by temperature exposure even for short periods of time, with approximately a 30 percent reduction in modulus for exposure to temperatures of 105 °C and above (CRWMS M&O 1999i, p. 91).

Due to the lack of cement grout testing data at high temperatures for a long period, it is uncertain how much the reduction will be for strength and modulus of elasticity as compared to

the values at ambient temperatures. Therefore, testing of cement grouts at elevated temperatures is recommended.

Data available on the creep characteristics of shrinkage-compensating concrete indicate that creep coefficients are within the same range as those of portland cement concrete of comparable quality (ACI 223-98, Sec. 2.5.4). There has been no observed difference between Poisson's ratio in shrinkage-compensating concrete and portland cement concrete (ACI 223-98, Sec. 2.5.5). It is reasonable to assume that grouts made with normal and shrinkage-compensating cement will behave similarly.

Based on the above discussion, it is expected that for room temperature conditions, the mechanical properties of expansive cement grout should be comparable to those of grouts made using conventional portland cement. The actual behavior of grout under elevated temperature may be somewhat different depending on the range of temperatures and moisture conditions in the repository. Further study and field testing of grout behavior at elevated temperatures, including longevity considerations, are necessary to confirm the above conclusions.

6.4.2.2 Thermal Properties

The most important thermal property of cement grout to be used in the repository is the thermal expansion coefficient. It should be pointed out that this property is a variable that depends on the W/CM ratio, age, and moisture content of the paste.

Although the coefficient of thermal expansion of shrinkage-compensating concrete is similar to that of corresponding portland cement concrete (ACI 223-98, Sec. 2.5.6), its value cannot be determined correctly without knowing details regarding its composition, age, and moisture content. It is desirable to design a cement grout such that the difference in thermal expansion coefficients between steel bolt, grout and host rock will be kept to minimum. Further research and testing are needed to determine the thermal properties of cement grouts to be used for the rock bolt system.

6.4.3 Factors Affecting Longevity of Cement Grout

The cement grout will play a significant role in determining the longevity of the fully grouted rock bolt system. In this section, factors affecting longevity of cement grout are evaluated.

6.4.3.1 Permeability

The permeability of cement grout plays an important role in durability because it controls the entry rate of moisture that may contain aggressive chemicals and the movement of water during heating. It should be noted that the term "permeability" used in this study is actually the coefficient of permeability, or hydraulic conductivity with units of m/s based on common concrete practice, rather than the strict definition of permeability, which has units of m^2. In a study on service life of concrete, it was concluded that concrete with low permeability are most likely to achieve service lives of around 500 years (Clifton and Knab 1989, p. 67). For the cement grout proposed to be used for the rock bolt system, it is expected that a service life of 300 years can be achieved if the permeability is less than 10^{-12} m/s. This value was considered as an

acceptable hydraulic conductivity for cement grout to be used in a nuclear waste disposal facility in Canada (Onofrei et al. 1992, p.137). Due to its similar function for long-term performance, it is reasonable to use the same value for the current study.

Permeability, in turn, is strongly dependent on the W/CM ratio. As the W/CM ratio decreases, the porosity of the grout decreases and the cement becomes more impermeable. The W/CM ratio has a dual role to play in grout durability. A lower W/CM ratio increases the strength of grout and hence, improves its resistance to cracking from internal stresses that may be generated by adverse reactions. Adding silica fume to the cement will decrease the permeability further.

The permeability of mature hardened paste (or grout) kept continuously moist ranges from 0.1 x 10^{-12} to 120 x 10^{-12} cm/s for W/C ratios ranging from 0.3 to 0.7 (Kosmatka and Panarese 1994, p. 8). A low-permeability grout requires a low W/CM ratio and an adequate moisture-curing period. In the proposed cement grout mix design, a low W/CM ratio in the range of 0.4 to 0.6 is proposed. Moreover, silica fume of 5 to 10 percent by weight of cementitious material and appropriate amount of superplasticizers are included in the design. The use of silica fume, superplasticizer, and low W/CM ratio in the proposed grout design should produce a hardened cement grout with high density and strength and very low permeability.

6.4.3.2 Sulfate Resistance

The most widespread and common form of chemical attack to concrete is the action of sulfates. Naturally occurring sulfates of sodium, potassium, calcium, and magnesium are sometimes found in soils or dissolved in groundwater adjacent to concrete structures, and they can attack concrete or cement products. The consequences of sulfate attack include not only disruptive expansion and cracking, but also loss of strength of the concrete or cement grout due to the loss of cohesion in the hydrated cement paste and of adhesion between it and the aggregate particles.

Resistance of concrete to attacks by sulfate is related to the amount of cement in the concrete and the calculated amount of C_3A (tricalcium aluminate) in the cement. The resistance is enhanced for concrete with high cement content and for cement low in C_3A (Waddell 1984, p. 37). The use of silica fume, fly ash, and ground slag generally improves the resistance of concrete to sulfate attack. Among these admixtures, silica fume provides excellent sulfate resistance, better than fly ash or ground slag in some studies (Kosmatka and Panarese 1994, p. 72).

Type II portland cement was selected in the ESF to provide increased resistance to sulfate attack (CRWMS M&O 1995, p. 59 of 300), which is conservative based on the SO_4^{2-} content of J-13 well water from the saturated zone below the repository horizon. In addition, the SO_4^{2-} content from infiltrating water is 116 mg/l (Section 4.1.5), which falls within the category of mild exposure for concrete subjected to sulfate attack, meaning special cement type is not needed for this exposure, based on Table 2.2.3 of ACI 201.2R-92, *Guide to Durable Concrete*. With conservative consideration, a 10 x concentration of SO_4^{2-} from infiltrating water, i.e., 1160 mg/l, is still within the category of moderate exposure based on this table. The recommended cement type for this exposure category is Type II cement, which is adequate to be used as the basis cement, from which the expansive cement Type K is manufactured. The expansive cement in the U.S. market is made with Type II cement, which is moderately sulfate resistant. In addition, the low W/CM ratio and silica fume to be used in the cement grout will provide further

resistance to sulfate attack. Thus, if the proposed cement grout mix is used, the effect of sulfate attack from the groundwater should be negligible.

6.4.3.3 Thermal Stability of Ettringite

As discussed in Section 6.4.1.1, ettringite formation is the basis of production of expansive cement. It is generally believed that ettringite is stable at room temperature. However, because of the many water molecules incorporated in its crystal structure, heating of ettringite may result in a progressive loss of water, or its decomposition (Klemm 1998, p. 27). Since the cement grout will be subjected to elevated temperature conditions, the thermal stability of ettringite is very important to the longevity of cement grout for the rock bolt system.

The thermal stability of ettringite has been evaluated by many investigations but no systematic results have been reported. In one study, it was indicated that ettringite heated under dry conditions was stable at 65 °C, but partially decomposed at 93 °C. In a moist environment, ettringite appeared not to show any significant change after one hour at 93 °C. It was also indicated that ettringite was decomposed at 130 to 150 °C in the range of 100 to 600 psi in deionizing water (Klemm 1998, p. 28). It was also believed that at temperatures between 50 and 80 °C, the ettringite formed by early hydration reactions is decomposed in the presence of alkali hydroxides (Klemm 1998, p. 29).

It should be pointed out that even though ettringite may decompose at high temperature, the destruction of ettringite may not impact the strength of cement grout. It was indicated in one study that the destruction of ettringite at 100 °C did not appear to have detrimental effects on compressive strength or volume stability of any of the cement (3 percent C_3A) mixtures which contained 30 percent amounts of fly ash, granulated blast furnace slag and silica fume (Klemm 1998, p. 29). However, the percentage of ettringite in Type K cement is higher than in normal grout and concrete, therefore, the decomposition of ettringite may affect the compressive strength of the grout to a higher degree.

It should be pointed out that the expansion of Type K cement with silica fume added will be completed in the first few days (Cohen et al. 1993, p. 34) after the cement grout is injected. From then on, the strength of the cement grout will mainly be controlled by calcium silicate hydrate (C-S-H) gel, which should not be impacted significantly by the elevated temperature. Since waste packages will not be emplaced in emplacement drifts until several months or later after the ground support components have been installed, the expansion process should have been completed, and the thermal stability of ettringite may not be a major concern by that time. Nevertheless, from a longevity concern, further studies may need to be conducted to evaluate the stability of ettringite under the environmental conditions which are expected in the emplacement drift.

6.4.3.4 Carbonation

Carbonation of concrete is a process by which CO_2 from the air, in the presence of moisture, penetrates the concrete and reacts with the hydroxides, mostly calcium hydroxide, to form carbonates. Carbonation increases shrinkage on drying (prompting crack development) and lowers the alkalinity of concrete (Kosmatka and Panarese 1994, p. 72).

As stated by Mindess and Young (1981, pp. 496 to 497), hardened cement paste will react chemically with carbon dioxide. The amount present in the atmosphere (~0.04 percent) is sufficient to cause considerable reaction with cement paste over a long period of time. This is accompanied by shrinkage. The extent to which cement paste can react with carbon dioxide and, hence undergo carbonation shrinkage, is a function of relative humidity (RH) and is greatest around 50 percent RH. At high humidities, carbonation is low because the pores of concrete or cement paste are mostly filled with water and CO_2 cannot penetrate the paste very well. At very low humidity, an absence of water films is believed to lower the rate of carbonation (Mindess and Young 1981, pp. 496 to 497). Note that as was discussed in Section 6.1.2, the RH in emplacement drifts is expected to be no greater than 40 percent during the preclosure period.

The amount of carbonation significantly increases in concrete or hardened cement paste with a high water-cement ratio, low cement content, short curing period, low strength, and highly permeable or porous paste (Kosmatka and Panarese 1994, p. 72). For the proposed cement grout mix design, however, all these factors liable for carbonation will not exist. Moreover, emplacement drifts are expected to be dry with elevated temperatures for an extensive period of time. Of special note, the cement grout in the rock bolt system is located in an annular space within the rock mass, which will minimize the amount of cement grout to be exposed to air containing CO_2 gas. In addition, the very small end surface area of the annular space is separated from the drift air by the bearing plate and is not exposed to air directly. Bolt holes may intersect some fractures in the rock mass, which may have ground water containing HCO_3^- with a concentration of 208 mg/l (i.e., 0.02 percent) (Section 4.1.5). Note that this concentration is too low to cause considerable reaction with $Ca(OH)_2$ in the cement grout. In addition, since the permeability of the cement grout will be very low (see Section 6.4.3.1), the potential access of water to the cement paste will be minimal.

Since the $Ca(OH)_2$ content in the silica fume grout mixes will be less than that in the cement grout without silica fume and the development of a silica fume grout will have very low permeability, the carbonation effect will be insignificant. It is postulated that under this dry and elevated temperature environment, the effect of carbonation on the cement grout in terms of longevity will be minimal or insignificant during the preclosure period, resulting in no impact on longevity.

6.4.3.5 Biological Effect

The biological effect on cement grout for the rock bolt system is expected to be minimal, or insignificant during the preclosure period. The major reason is that the RH value in the emplacement drift is very low (a maximum of 40%) during the preclosure period. In addition, the conditions favorable for degradation of cement grout are not expected to occur due to the following reasons :

- Water flow through any cracks or fractures that may be encountered along the length of the drill hole will be either blocked or substantially reduced by the grout, which will have very low permeability (less than 10^{-10}cm/s) (see Section 6.4.3.1).

- Cement grout will be encapsulated within the rock mass and the grout will have a low W/CM ratio.

- Organic admixtures from superplasticizers (especially long-chain types) in cement grout will probably not be a nutrient supply for microbial activity (see discussion in Section 6.4.1.5).

6.4.3.6 Effect of Radiation

Neutron irradiation of concrete (or cement) can cause changes in the material's physical characteristics. Shrinkage, expansion, and changes in mechanical properties have been observed in concrete exposed to high-flux neutron fields (e.g. surrounding a nuclear reactor core). Gamma radiation is important to consider as well because it can weaken cement by depositing heat in the material. This heat deposition results in a temperature increase that can cause hydration and hydrolysis. These heating effects are identical to those encountered during normal heating or curing of the cement, although lesser in intensity.

The cumulative fast neutron fluence at 295 years post-emplacement is 2.11×10^{13} n/cm^2 (from Table I-5, Attachment I). This is considerably less than what is necessary for structural damage to occur. No degradation in the mechanical properties of cement have been observed for fast neutron fluences as high as 8.2×10^{19} n/cm^2 (Elleuch 1970, p. 1086). These studies show that there is little or no change in dimension, weight, compressive strength, bending strength, or Young's Modulus of cement paste due to irradiation alone.

The effect of gamma radiation on cement is to increase the temperature of the material proportional to the dose rate. Immediately after emplacement, (i.e., at 0 year when the dose rate is highest), the drift wall has an incident gamma energy flux density of 1.96×10^{8} MeV/cm^2-s (from MCNP4B output file *gamflux.out*) (CRWMS M&O 2000c). However for energy flux densities less than 10^{10} MeV/cm^2-s, a negligible temperature rise takes place (ANSI/ANS 1997, p. 21). Since the temperature increase is negligible, the result is that cement grout is impervious to gamma irradiation at this level.

It can be concluded that the neutron fluence is too small to cause any changes in the mechanical properties of cement grout. Moreover, the gamma heating (even at the maximum, immediately after waste emplacement) is negligible.

6.4.4 Design Considerations

The function of the grout within the fully grouted rock bolt system is complex. The grout must bind well with the steel bolt and with the rock mass, and must protect the steel components against corrosion in such a way that the rock bolt system will retain sufficient strength to maintain its rock reinforcement function with little or no maintenance for a period of up to 175 years, or to 300 years with appropriate monitoring and maintenance. In addition, the grout should have physical and chemical compatibility with the host rock.

6.4.4.1 Corrosion

One of the functions of grout in the rock bolt system is to seal the drill hole to prevent corrosion of the bolt. As discussed in Sections 6.3.3 and 6.3.6, the potential for steel corrosion is insignificant for the emplacement drift environment under continuous ventilation. However, it should be pointed out that the integrity of the grout as a seal or barrier is very important. Since bolt drill holes may intersect fractures within the rock mass, there is potential for water percolating from these fractures and contacting the bolt if the encapsulating grout cracks under elevated temperature within a period of up to 300 years. The cracking of cement grouts may be caused by differential thermal expansion between rock bolt, grout, and rock, and this has the potential to cause failure of the bonds. The effective bond between the grout and host rock is also crucial to minimize water flow at the rock/grout interface, which could lead to corrosion of the bolt shank or bolt head.

It is, therefore, very important to investigate the bonding integrity of the cement grout with steel and its interaction with the host rock (i.e., tuff) under elevated temperatures to ensure its long-term performance to prevent the bolt corrosion.

6.4.4.2 Differential Thermal Expansion

Differential thermal expansion between rock bolt, grout, and rock has the potential to cause failure of the bonds. Although the differences in the thermal expansion coefficients between steel, cement, and welded tuff are expected to be small and the thermal loading rate is low, the temperature change from about 25 °C (initial temperature at the emplacement drift) to a wall rock temperature of 100 °C or higher may give rise to significant accumulative displacements. The combination of differential strain and a weakening grout bond due to time and temperature variations could significantly reduce the long-term capacity of the rock bolts. An approach to this potential problem has been suggested by analytical results showing high axial bolt stress near the head of the bolt. A debonded section, such as suggested by Leedy and Watters (1994, p. 693), along the bolt near the drift wall could eliminate the high stress but must be designed so it will not reduce the corrosion protection and support capacity. An alternative approach is to develop grouts that are much more stable at elevated temperature and have a thermal expansion coefficient sufficiently close to those of the bolt and the host rock.

6.4.4.3 Creep

The major advantage of a fully grouted rock bolt system over mechanical bolts is its excellent performance with regard to anchorage creep at ambient temperature. However, there is very little experimental data regarding the performance of grouted rock bolt systems under elevated temperatures.

Results from a 9-month in situ heating test (CRWMS M&O 1999j, p. 3-9) indicated that the grout creep may be higher at elevated temperature than at ambient temperature. In this test, load cells were installed on a pretensioned fully-grouted rock bolt system. Four bolts on the heated side showed an average of 3.26 percent load drop while the other four rock bolts, away from the heater at ambient temperature, showed an average of 1.56 percent decrease (CRWMS M&O 1999j, p. 9-22). It is possible that grout creep was responsible, although differential thermal

expansion could have contributed as well. Since access to the repository emplacement drifts will be limited and the required service life is long, it is important to investigate this behavior with further analyses and field testing in the expected emplacement drift environment to further understand the performance of the cement grout.

6.5 LONGEVITY OF MATERIALS FOR EMPLACEMENT DRIFT INVERT

Invert materials will not be a component of the emplacement drift ground support. Note that steel inverts between steel sets are also not part of the ground support system. They will be completely independent regardless of the configuration. In this section, a brief discussion on this subject is presented.

6.5.1 Structural Steel

For this configuration the structural frames forming the invert will be anchored to the walls of the drift and will directly support the gantry rails and the waste packages (CRWMS M&O 2000e, Figure 5, p. 24). For this design, the crushed rock serves only as a filler material surrounding the structural steel supports.

6.5.1.1 Material

The structural steel will be carbon steel conforming to either ASTM A 36, ASTM A 572, or other qualified carbon steel as chosen in final design.

6.5.1.2 Longevity

Preclosure longevity of the structural steel invert will depend on the corrosiveness of the environment and the radiation levels during this period. For a discussion of the drift environment and the corrosiveness of carbon steel in this environment, see Section 6.3.3; for radiation effect see Section 6.3.5. For both cases the effects on the carbon steel are negligible.

6.5.2 Crushed Rock

For this configuration the gantry rails will be supported on steel ties that will be supported on the crushed rock ballast in a manner similar to the rail support provided for railroad trains. Waste package supports will also be supported on steel spread footings directly supported by the crushed rock ballast. In this case, the crushed rock ballast serves as the structural bearing material rather than as simply a filler material.

6.5.2.1 Material

The candidate crushed rock material that is presently under consideration and which is being tested for material properties is crushed welded tuff. Other rock materials considered in the past were limestone and marble. Final material selection requires additional testing of thermal, chemical, mechanical and hydrologic properties of candidate materials.

6.5.2.2 Longevity

The longevity of crushed rock is briefly presented in this section.

6.5.2.2.1 Crushed Rock Filler

For the invert configuration described in Section 6.5.1, the longevity of the crushed rock ballast is not an issue because the crushed rock ballast functions only as a filler material. However, if it weathers to smaller pieces, these may wick and increase moisture retention and promote corrosion of the steel in contact with them. Further investigation on water flow through crushed rock filler is needed.

6.5.2.2.2 Crushed Rock Structural Ballast

For the invert configuration described in Section 6.5.2, the crushed rock ballast must serve as a structural bearing material. In order for it to meet this function it must have the following: (1) proper quality, (2) proper gradation, and (3) proper compaction.

Proper Quality-The crushed rock structural ballast must be strong and durable. Recommendation for these attributes according to the American Railway Engineering Association (AREA) (AREA 1997, p. 1-2-12, Table 2-1) for limestone as a representative is given in the following. It is expected that the crushed tuff should have similar attributes to give similar durability.

1) Bulk Specific Gravity: 2.60 min. (ASTM C 127)

2) Absorption Percent: 2.0 max. (ASTM C 127)

3) Clay Lumps and Friable Particles: 0.5% max. (ASTM C 142)

4) Degradation: 30% max. (ASTM C 535 or C 131)

5) Soundness (Sodium Sulfate) 5 Cycles: 5.0% max. (ASTM C 88)

6) Flat and/or Elongated Particles: 5.0% max. (ASTM D 4791)

7) Percent Material Passing No. 200 Sieve: 1.0% max. (ASTM C 117)

Proper Gradation- The recommended gradations for ballast materials by AREA (AREA 1997, Vol. 1, p. 1-2-13, Table 2-2) may not be suitable for the current emplacement drift invert if ballast is considered as the supporting material for the waste package assembly. The reason is that the conventional railway ballast materials have a uniform gradation, which is good for drainage but may not be strong enough for supporting the heavy waste package assembly for a long period. Moreover, the emplacement drift invert will be in a relatively dry condition during the preclosure period, hence, drainage is not a major concern. Therefore, it is proposed that the crushed tuff with well-graded particle sizes ranging from 2 inches to No. 200 sieve size (with 1% as maximum) is preliminarily considered to be adequate. Notice that this gradation is a little different from that of the conventional railway ballast materials, which usually have a uniform

gradation and permit little, if any, minus No. 4 sieve materials to be present (Barksdale 1991, p. 11-7). However, the major concern for the property of ballast in the emplacement drift invert is high bearing capacity rather than water drainage. A well graded aggregate (or ballast) gives the maximum density when compacted, which in turn will achieve higher bearing capacity. It needs to be pointed out that the final gradation will not be known until proper tests are conducted for ballast under emplacement invert drift conditions.

Proper Compaction-The crushed rock invert materials should be compacted with roller vibration in a multiple lift operation when such a compaction effort is suitable. In confined areas, such as around steel sets, vibrating tamping equipment should be used. The compaction effort should be characterized in terms of the relative density properties.

Longevity of the Crushed Rock Invert-Given the proper quality and proper gradation of the crushed rock invert, the crushed rock invert should be able to function in the emplacement drifts during the preclosure period.

7. CONCLUSIONS

The factors affecting longevity of emplacement drift ground support materials during the preclosure period have been evaluated in this analysis, and a basis for the selection of materials for this function has been developed. The method, approach, and the results are appropriate in this analysis. Based on the discussions in the previous sections, the following conclusions are made.

7.1 RECOMMENDED GROUND SUPPORT MATERIALS

- The recommended ground support materials are steel sets and fully cement-grouted rock bolts.
- Both the steel sets and the steel rock bolts will be made from carbon steel.
- The candidate materials for the emplacement drift invert are a carbon steel frame and crushed limestone, marble, or welded tuff, of which crushed welded tuff is presently under consideration and is being tested for material properties. Further investigation is needed to determine the final material.

7.2 LONGEVITY OF STEEL GROUND SUPPORT COMPONENTS

- Under the expected environment of elevated temperature (ranging from about 45 °C to up to boiling during normal preclosure operations) and low RH (no greater than 40 percent), the corrosion potential for dry oxidation on steel sets and other steel components such as wire mesh, channels, panels, nut and bolts for fastening lagging to steel sets should be insignificant during the preclosure period.

- The humid-air corrosion of steel ground components is not expected to occur over substantial regions of the emplacement drifts during the preclosure period. However, it is possible that the potential of this type of corrosion may exist in some localized areas. The impact of this type of corrosion on carbon steel ground support components was illustrated by the results of the corrosion test on corrosion-allowance materials from Lawrence Livermore National Laboratory. It was indicated that some ground support components may fail in different periods, such as 50 years up to 300 years under humid-air condition if steel components of inadequate thickness are used. However, it should be emphasized that this conclusion is made on very simple assumptions without any structural analysis. Systematic studies and tests are needed to investigate the potential of humid-air corrosion in the repository.

- The potential impacts of localized liquid phase water on steel ground support is also discussed. The estimated corrosion depths of steel components under aqueous corrosion are much greater than those of dry oxidation and humid-air corrosion. Although the possibility to have aqueous corrosion on steel components of ground support during the preclosure period is very low, there is a need to further study the potential effects of localized liquid phase water on ground support systems as well as estimate the location and frequency of their occurrence.

- The effect of expected temperatures and radiation on the mechanical properties of steel, including strength, modulus of elasticity, toughness and ductility, will be insignificant during the preclosure period. The potential for microbiologically influenced corrosion (MIC) will be insignificant due to the low relative humidity in these environmental conditions.

- The above conclusions also apply to rock bolts, heads, and bearing plates, which are made with carbon steel materials. For the major portion of the rock bolt, which is encapsulated by cement grout of very low permeability and inside the rock mass, the corrosion potential is insignificant during the preclosure period.

- It should be pointed out that an accurate estimate of the longevity of steel ground support components within the emplacement drift is complicated because there is no precedent data from similar ground support components under similar environmental conditions. Systematic studies, including structural analysis and tests, should be completed to accurately estimate the corrosion depths in humid-air and aqueous conditions.

7.3 LONGEVITY OF CEMENT GROUT

- To ensure the proper function of the grout, (i.e., to provide sufficient strength to maintain the rock reinforcement function and serve as a corrosion barrier for the rock bolt), it should have acceptable low hydraulic conductivity (or permeability), and resistance to attack by the environmental conditions.

- A potentially suitable candidate cement grout will consist of the following ingredients: Type K cement, silica fume, superplasticizer, and water, with no sand or fine aggregate. It should be pointed out that the list of these candidate ingredients is preliminary in nature. Further study and testing are required to determine whether they are actually adequate and suitable in the repository environment.

- Factors affecting longevity of cement grout include permeability, sulfate resistance, thermal stability of ettringite, carbonation, biological effect, and radiation effect. It is expected that the proposed materials for cement grout can ensure the longevity of cement grout in the emplacement drift environment during the preclosure period. However, it is very important to conduct further study and testing to investigate the thermal stability of ettringite when grout is exposed to elevated temperatures for a relatively long period.

- Due to the particular importance of grout in the rock bolt system, there may be a need to investigate the capability of other grout types, in addition to the expansive cement type, which may be used successfully in the fully grouted rock bolt system.

- There exists a need for further investigation with regard to corrosion, differential thermal expansion, and creep of a fully grouted rock bolt system. A thorough understanding of the mechanisms and performance of rock bolts in these areas will be essential to ensure the fulfillment of the rock bolt functions.

7.4 LONGEVITY OF MATERIALS FOR EMPLACEMENT DRIFT INVERT

- The longevity of invert materials for the preclosure period has been assessed for both steel invert and crushed rock ballast. The longevity of steel ground support discussed earlier should be applicable to steel invert during the preclosure period.

- The candidate crushed rock material that is presently under consideration and which is being tested for material properties is crushed welded tuff. Other rock materials allowed for consideration in the past are limestone and marble. Final material selection requires additional testing of thermal, chemical, mechanical and hydrologic properties of candidate materials.

- For the crushed rock ballast as a filler for steel invert, the longevity of the crushed rock ballast is not an issue because it functions only as a filler material, except if it weathers to smaller pieces, which may wick and increase moisture retention and promote corrosion of the steel in contact. Further investigation on water flow through crushed rock filler is needed.

- For the crushed rock ballast serving as a structural bearing material, the structural function and durability can be secured by following the proper quality recommended by the American Railway Engineering Association, proper gradation, and proper compaction.

7.5 UNCERTAINTIES AND RESTRICTIONS

It should be pointed out that the recommendations for ground support materials to be used in the emplacement drifts are preliminary in nature since no precedent testing of carbon steel and cement grout in the expected emplacement drift environment has been done in the past. Neither the grade and specification of the carbon steel nor the actual mix design for the cement grout to be used in the emplacement drifts have been determined for the proposed repository. Therefore, outputs/conclusions from this analysis cannot be used as input for documents supporting procurement, fabrication, or construction nor used in verified design unless controlled in accordance with applicable procedures.

This document may be affected by technical product input information that requires confirmation. Any changes to the document that may occur as a result of completing the confirmation activities will be reflected in subsequent revisions. The status of the technical product input information quality may be confirmed by review of the Document Input Reference System database.

8. INPUTS AND REFERENCES

8.1 DOCUMENTS CITED

ASM (American Society for Metals) 1978. *Properties and Selection: Irons and Steels.* Volume 1 of *Metals Handbook.* 9th Edition. Bardes, B.P., ed. Metals Park, Ohio: American Society for Metals. TIC: 209799.

ASM International 1990. *Properties and Selection: Irons, Steels, and High-Performance Alloys.* Volume 1 of *Metals Handbook.* 10th Edition. Materials Park, Ohio: ASM International. TIC: 245666.

Barksdale, R.D., ed. 1991. *The Aggregate Handbook.* Pages 3-25,11-7,11-57,15-26. Washington, D.C.: National Stone Association. TIC: 248354.

Bayasi, Z. and Abifaher, R. 1993. "Properties of Shrinkage-Compensating Silica-Fume Concrete Made with Type K Cement." *Mineral Admixtures.* Compilation 22, Pages 7-9. Detroit, Michigan: American Concrete Institute. TIC: 245372.

Briesmeister, J.F., ed. 1997. *MCNP-A General Monte Carlo N-Particle Transport Code.* LA-12625-M, Version 4B. Los Alamos, New Mexico: Los Alamos National Laboratory. ACC: MOL.19980624.0328.

BSC (Bechtel SAIC Company) 2001. *Requirements and Criteria for Implementing a Repository Design that can be Operated Over a Range of Thermal Modes.* Input Transmittal 00402.Ta. Las Vegas, Nevada: Bechtel SAIC Company. ACC: MOL.20010504.0296.

Clifton, J.R. and Knab, L.I. 1989. *Service Life of Concrete.* NUREG/CR-5466. Washington, D.C.: U.S. Nuclear Regulatory Commission. TIC: 216355.

Cohen, M.D.; Olek, J.; and Mather, B. 1993. "Silica Fume Improves Expansive-Cement Concrete." *Mineral Admixtures.* Compilation 22, Pages 29-35. Detroit, Michigan: American Concrete Institute. TIC: 245372.

CRWMS M&O (Civilian Radioactive Waste Management System Management and Operating Contractor)1995. *ESF Ground Support Design Analysis*. BABEE0000-01717-0200-00002 REV 00. Las Vegas, Nevada: CRWMS M&O. ACC: MOL.19960409.0355.

CRWMS M&O 1997a. *Overall Development and Emplacement Ventilation Systems.* BCA000000-01717-0200-00015 REV 00. Las Vegas, Nevada: CRWMS M&O. ACC: MOL.19980123.0661.

CRWMS M&O 1997b. *MGDS Subsurface Radiation Shielding Analysis*. BCAE00000-01717-0200-00001 REV 00. Las Vegas, Nevada: CRWMS M&O. ACC: MOL.19971204.0497.

CRWMS M&O 1997c. *Materials for Emplacement Drift Ground Support*. BCAA00000-01717-0200-00003 REV 00. Las Vegas, Nevada: CRWMS M&O. ACC: MOL.19971029.0493.

CRWMS M&O 1998a. *Software Qualification Report for MCNP Version 4B2, A General Monte Carlo N-Particle Transport Code.* CSCI: 30033 V4B2LV. DI: 30033-2003, Rev. 01. Las Vegas, Nevada: CRWMS M&O. ACC: MOL.19980622.0637.

CRWMS M&O 1998b. *Waste Package Degradation Expert Elicitation Project.* Rev. 1. Las Vegas, Nevada: CRWMS M&O. ACC: MOL.19980727.0002.

CRWMS M&O 1998c. *Ground Support Alternatives Evaluation for Emplacement Drifts*. BCAA00000-01717-5705-00002 REV 00. Las Vegas, Nevada: CRWMS M&O. ACC: MOL.19980930.0468.

CRWMS M&O 1998d. *Repository Ground Support Analysis for Viability Assessment*. BCAA00000-01717-0200-00004 REV 01. Las Vegas, Nevada: CRWMS M&O. ACC: MOL.19980512.0714.

CRWMS M&O 1998e. *Concrete Chemical Evolution*. BCAA00000-01717-5705-00003 REV 00. Las Vegas, Nevada: CRWMS M&O. ACC: MOL.19981207.0332.

CRWMS M&O 1998f. *Software Code: MCNP.* V 4B2LV. PC. 30033-4B2LV.

CRWMS M&O 1999a. Not used.

CRWMS M&O 1999b. Not used.

CRWMS M&O 1999c. Not used.

CRWMS M&O 1999d. *Classification of the MGR Ground Control System*. ANL-GCS-SE-000001 REV 00. Las Vegas, Nevada: CRWMS M&O. ACC: MOL.19990928.0217.

CRWMS M&O 1999e. Not used.

CRWMS M&O 1999f. Not used.

CRWMS M&O 1999g. *Post Closure Open-Loop Natural Ventilation*. BCAD00000-01717-0210-00002 REV 00. Las Vegas, Nevada: CRWMS M&O. ACC: MOL.19990806.0069.

CRWMS M&O 1999h. *Evaluation of Alternative Materials for Emplacement Drift Ground Control*. BCAA00000-01717-0200-00013 REV 00. Las Vegas, Nevada: CRWMS M&O. ACC: MOL.19990720.0198.

CRWMS M&O 1999i. *Progress Report for Laboratory Testing of Concrete Properties at Elevated Temperatures, Data Transmittal Number 1*. BA0000000-01717-5700-00021 REV 00. Albuquerque, New Mexico: CRWMS M&O. ACC: MOL.19990317.0395.

CRWMS M&O 1999j. *Single Heater Test Final Report.* BAB000000-01717-5700-00005 REV 00 ICN 1. Las Vegas, Nevada: CRWMS M&O. ACC: MOL.20000103.0634.

CRWMS M&O 1999k. Not used.

CRWMS M&O 1999l. *PWR Source Term Generation and Evaluation*. BBAC00000-01717-0210-00010 REV 01. Las Vegas, Nevada: CRWMS M&O. ACC: MOL.20000113.0333.

CRWMS M&O 1999m. *Emplacement Drift Shielding Calculation*. CAL-WER-NU-000002 REV 00. Las Vegas, Nevada: CRWMS M&O. ACC: MOL.19991028.0001.

CRWMS M&O 1999n. *ANSYS Thermal Calculations in Support of Waste Quantity, Mix and Throughput Study.* CAL-EBS-MG-000001 REV 00. Las Vegas, Nevada: CRWMS M&O. ACC: MOL.20000119.0134.

CRWMS M&O 1999o. Not used.

CRWMS M&O 1999p. *Rock Fall Calculations for Single Corrosion Resistant Material Waste Packages.* CAL-EBS-ME-000001 REV 00. Las Vegas, Nevada: CRWMS M&O. ACC: MOL.19991022.0200.

CRWMS M&O 1999q. Not used.

CRWMS M&O 2000a. *Longevity of Emplacement Drift Ground Support Materials.* ANL-EBS-GE-000003 REV 01. Las Vegas, Nevada: CRWMS M&O. ACC: MOL.20000414.0874.

CRWMS M&O 2000b. *Ground Control System Description Document.* SDD-GCS-SE-000001 REV 01. Las Vegas, Nevada: CRWMS M&O. ACC: MOL.20000803.0355.

CRWMS M&O 2000c. *Input and Output Files for MCNP4B Radiation Calculation and Associated Spreadsheets in Support of Longevity of Emplacement Drift Ground Support Materials.* Las Vegas, Nevada: CRWMS M&O. ACC: MOL.20000316.0185.

CRWMS M&O 2000d. *Structural Calculation of an Emplacement Pallet Statically Loaded by a Waste Package.* CAL-WER-ME-000003 REV 00. Las Vegas, Nevada: CRWMS M&O. ACC: MOL.20000202.0192.

CRWMS M&O 2000e. *Invert Configuration and Drip Shield Interface.* TDR-EDS-ST-000001 REV 00. Las Vegas, Nevada: CRWMS M&O. ACC: MOL.20000505.0232.

CRWMS M&O 2000f. *In-Drift Microbial Communities.* ANL-EBS-MD-000038 REV 00 ICN 01. Las Vegas, Nevada: CRWMS M&O. ACC: MOL.20001213.0066.

CRWMS M&O 2000g. *Waste Package Degradation Process Model Report.* TDR-WIS-MD-000002 REV 00 ICN 02. Las Vegas, Nevada: CRWMS M&O. ACC: MOL.20001228.0229.

CRWMS M&O 2000h. *Unsaturated Zone Flow and Transport Model Process Model Report.* TDR-NBS-HS-000002 REV 00 ICN 02. Las Vegas, Nevada: CRWMS M&O. ACC: MOL.20000831.0280.

CRWMS M&O 2000i. *Input Parameters for Thermal Modeling Using Conduction-Only Models.* CAL-NBS-TH-000001 REV 00. Las Vegas, Nevada: CRWMS M&O. ACC: MOL.20001107.0365.

CRWMS M&O 2001a. *Technical Work Plan For Subsurface Design Section FY 01 Work Activities.* TWP-MGR-MG-000001 REV 01. Las Vegas, Nevada: CRWMS M&O. ACC: MOL.20010207.0158.

Day, K.W. 1995. *Concrete Mix Design, Quality Control and Specification.* London, England: E & F N Spon. TIC: 245446.

Elleuch, L.F.; DuBois, F.; and Rappeneau, J. 1970. "Effects of Neutron Radiation on Special Concretes and Their Components." *Concrete for Nuclear Reactors, Proceedings of an International Seminar held in Berlin, Germany, October 5-9, 1970.* Special Publication SP-34. Volume II. Pages 1071-1108. Detroit, Michigan: American Concrete Institute. TIC: 246846.

Haynes International 1997. *Hastelloy C-22 Alloy.* Kokomo, Indiana: Haynes International. TIC: 238121.

Kaiser, P.K.; Maloney S.M.; and Singh, S.P. 1990. "Feasibility of Long-Term Ground Control with Stainless Steel Friction Rock Bolts." *CIM Bulletin, Rock Mechanics, 83,* (940), 55-60. Montreal, Quebec, Canada: Canadian Institute of Mining and Metallurgy. TIC: 242114.

Klemm, W.A. 1998. *Ettringite and Oxyanion-Substituted Ettringites – Their Characterization and Applications in the Fixation of Heavy Metals: A Synthesis of the Literature*. Skokie, Illinois: Portland Cement Association. TIC: 245615.

Kosmatka, S.H. and Panarese, W.C. 1994. *Design and Control of Concrete Mixtures.* 13th Edition. Skokie, Illinois: Portland Cement Association. TIC: 242269.

Leedy, W.T. and Watters, R.J. 1994. "Assessment of Rock Bolt Systems for Underground Waste Storage." *High Level Radioactive Waste Management, Proceedings of the Fifth Annual International Conference, Las Vegas, Nevada, May 22-26, 1994.* Pages 691-695. La Grange Park, Illinois: American Nuclear Society. TIC: 241944.

McCright, R.D. 1998. *Corrosion Data and Modeling Update for Viability Assessment* . Volume 3 of *Engineered Materials Characterization Report.* UCRL-ID-119564, Rev. 1.1. Livermore, California: Lawrence Livermore National Laboratory. ACC: MOL.19981222.0137.

Merritt, F.S., ed. 1983. *Standard Handbook for Civil Engineers.* 3rd Edition. New York, New York: McGraw-Hill. TIC: 206892.

Mindess, S. and Young, J.F. 1981. *Concrete.* Englewood Cliffs, New Jersey: Prentice-Hall. TIC: 242878.

Onofrei, M.; Gray, M.N.; Coons, W.E.; and Alcorn, S.R. 1992. "High Performance Cement-Based Grouts for Use in a Nuclear Waste Disposal Facility." *Waste Management, 12,* 133-154. New York, New York: Pergamon Press. TIC: 245401.

Onofrei, M.; Gray, M.N.; Pusch, R.; Borgesson, L.; Karnland, O.; Shenton, B.; and Walker, B. 1993. *Sealing Properties of Cement-Based Grout Materials Used in the Rock Sealing Project.* AECL-10815. Pinawa, Manitoba, Canada: Atomic Energy of Canada Limited, Whiteshell Laboratories. TIC: 210964.

Peng, S.S. 1986. *Coal Mine Ground Control.* 2nd Edition. New York, New York: John Wiley & Sons. TIC: 243435.

Regulatory Guide 1.99, Rev. 2. 1988. *Radiation Embrittlement of Reactor Vessel Materials.* Washington, D.C.: U.S. Nuclear Regulatory Commission. TIC: 4637.

Russell, E.D. 2000. "The S.G. of Type K Cement as Manufactured by Blue Circle Cement is 3.12." Facsimile from E.D. Russell (Blue Circle Cement) to D. Tang, January 24, 2000. ACC: MOL.20000211.0078.

Shah, S. P. and Ahmad, S. H., eds. 1994. *High Performance Concrete: Properties and Applications*. New York, New York: McGraw-Hill. TIC: 241054.

Shleien, B.; Slaback, L.A., Jr.; and Birky, B.K. 1998. *Handbook of Health Physics and Radiological Health.* 3rd Edition. Baltimore, Maryland: Williams & Wilkins. TIC: 245831.

Stahl, D.; McCoy, J.K.; and McCright, R.D. 1995. "Impact of Thermal Loading on Waste Package Material Performance." *Scientific Basis for Nuclear Waste Management XVIII, Symposium held October 23-27, 1994, Kyoto, Japan.* Murakami, T. and Ewing, R.C., eds. *353,* 671-678. Pittsburgh, Pennsylvania: Materials Research Society. TIC: 216341.

Van Konynenburg, R.A.; McCright, R.D.; Roy, A.K.; and Jones, D.A. 1995. *Design Data.* Volume 2 of *Engineered Materials Characterization Report for the Yucca Mountain Site Characterization Project.* UCRL-ID-119564. Livermore, California: Lawrence Livermore National Laboratory. ACC: MOL.19960402.0547.

Waddell, J. J. 1984. *Concrete Manual*. Pages 3-4, 31-35, 37-38, and 54. Whittier, California: International Conference of Building Officials. TIC: 240632.

Weast, R.C., ed. 1985. *CRC Handbook of Chemistry and Physics.* 66th Edition. Boca Raton, Florida: CRC Press. TIC: 216054.

Wilder, D.G., ed. 1993. *Scientific Overview of Near-Field Environment and Phenomena.* Volume II of *Preliminary Near-Field Environment Report* . UCRL-LR-107476. Livermore, California: Lawrence Livermore National Laboratory. ACC: NNA.19920501.0002.

Williams Form Engineering Corporation. 1995. Wil-X-Cement Grout, No. S5Z. Grand Rapids, Michigan. Williams Form Engineering Corporation. TIC: 245371.

Williams Form Engineering Corporation. 1997. Rock Anchor Systems, No. 397. Grand Rapids, Michigan. Williams Form Engineering Corporation. TIC: 245370.

Wolsiefer, J.T., Sr. 1991. "Silica Fume Concrete: A Solution to Steel Reinforcement Corrosion in Concrete." *Second CANMET/ACI International Conference on Durability of Concrete, August 1991, Montreal, Canada.* SP 126-28. [Detroit, Michigan: American Concrete Institute]. TIC: 245402.

8.2 CODES, STANDARDS, REGULATIONS, AND PROCEDURES

ACI 201.2R-92 (Reapproved 1997). 2000. *Guide to Durable Concrete.* Farmington Hills, Michigan: American Concrete Institute. TIC: 249729.

ACI 222R-96. 1997. *Corrosion of Metals in Concrete.* Farmington Hills, Michigan: American Concrete Institute. TIC: 249637.

ACI 223-98. 1998. *Standard Practice for the Use of Shrinkage – Compensating Concrete*. Farmington Hills, Michigan: American Concrete Institute. TIC: 245440.

AISC (American Institute of Steel Construction) 1997. *Manual of Steel Construction, Allowable Stress Design.* 9th Edition, 2nd Revision, 2nd Impression. Chicago, Illinois: American Institute of Steel Construction. TIC: 240772.

ANSI/ANS-6.4-1997. *Nuclear Analysis and Design of Concrete Radiation Shielding for Nuclear Power Plants.* La Grange Park, Illinois: American Nuclear Society. TIC: 241065.

AP-2.21Q, Rev. 1, ICN 0, BSCN 001. *Quality Determinations and Planning for Scientific, Engineering, and Regulatory Compliance Activities.* Washington, D.C.: U.S. Department of Energy, Office of Civilian Radioactive Waste Management. ACC: MOL.20010212.0018.

AP-3.10Q, Rev. 2, ICN 4. *Analyses and Models.* Washington, D.C.: U.S. Department of Energy, Office of Civilian Radioactive Waste Management. ACC: MOL.20010405.0009.

AP-3.15Q, Rev. 2, ICN 1. *Managing Technical Product Inputs.* Washington, D.C.: U.S. Department of Energy, Office of Civilian Radioactive Waste Management. ACC: MOL.20010405.0011.

AP-SI.1Q, Rev. 3. *Software Management.* Washington, D.C.: U.S. Department of Energy, Office of Civilian Radioactive Waste Management. ACC: MOL.20010405.0012.

AREA (American Railway Engineering Association) 1997. *Manual for Railway Engineering.* Volume 1. Washington, D.C.: American Railway Engineering Association. TIC: 233847.

ASTM (American Society for Testing and Materials) A 36/A 36M-00a. 2000. *Standard Specification for Carbon Structural Steel.* West Conshohocken, Pennsylvania: American Society for Testing and Materials. TIC: 249500.

ASTM A 82-97a. 1998. *Standard Specification for Steel Wire, Plain, for Concrete Reinforcement*. West Conshohocken, Pennsylvania: American Society for Testing and Materials. TIC: 246400.

ASTM A 185-97. 1997. *Standard Specification for Steel Welded Wire Fabric, Plain, for Concrete Reinforcement*. Philadelphia, Pennsylvania: American Society for Testing and Materials. TIC: 246271.

ASTM A 572/A 572M-00a. 2001. *Standard Specification for High-Strength Low-Alloy Columbium-Vanadium Structural Steel.* West Conshohocken, Pennsylvania: American Society for Testing and Materials. TIC: 249503.

ASTM C 88-99a. 1999. *Standard Test Method for Soundness of Aggregates by Use of Sodium Sulfate or Magnesium Sulfate*. West Conshohocken, Pennsylvania: American Society for Testing and Materials. TIC: 246402.

ASTM C 117-95. 1998. *Standard Test Method for Materials Finer Than 75µm (No. 200) Sieve in Mineral Aggregates by Washing.* West Conshohocken, Pennsylvania: American Society for Testing and Materials. TIC: 242992.

ASTM C 127-88 (Reapproved 2001). 1988. *Standard Test Method for Specific Gravity and Absorption of Coarse Aggregate.* West Conshohocken, Pennsylvania: American Society for Testing and Materials. TIC: 249793.

ASTM C 131-96. 1998. *Standard Test Method for Resistance to Degradation of Small-Size Coarse Aggregate by Abrasion and Impact in the Los Angeles Machine.* West Conshohocken, Pennsylvania: American Society for Testing and Materials. TIC: 242992.

ASTM C 142-97. 1998. *Standard Test Method for Clay Lumps and Friable Particles in Aggregates*. Philadelphia, Pennsylvania: American Society for Testing and Materials. TIC: 242992.

ASTM C 150-00. 2000. *Standard Specification for Portland Cement.* West Conshohocken, Pennsylvania: American Society for Testing and Materials. TIC: 249659.

ASTM C 494/C 494M-99a. 1999. *Standard Specification for Chemical Admixtures for Concrete.* West Conshohocken, Pennsylvania: American Society for Testing and Materials. TIC: 249505.

ASTM C 535-96. 1998. *Standard Test Method for Resistance to Degradation of Large-Size Coarse Aggregate by Abrasion and Impact in the Los Angeles Machine.* West Conshohocken, Pennsylvania: American Society for Testing and Materials. TIC: 242992.

ASTM C 845-96. 1996. *Standard Specification for Expansive Hydraulic Cement*. West Conshohocken, Pennsylvania: American Society for Testing and Materials. TIC: 246401.

ASTM C 1240-00. 2000. *Standard Specification for Use of Silica Fume as a Mineral Admixture in Hydraulic-Cement Concrete, Mortar, and Grout.* West Conshohocken, Pennsylvania: American Society for Testing and Materials. TIC: 249506.

ASTM D 4791-99. 1999. *Standard Test Method for Flat Particles, Elongated Particles, or Flat and Elongated Particles in Coarse Aggregate.* West Conshohocken, Pennsylvania: American Society for Testing and Materials. TIC: 248394.

ASTM F 432-95. 1995. *Standard Specification for Roof and Rock Bolts and Accessories*. Philadelphia, Pennsylvania: American Society for Testing and Materials. TIC: 241007.

QAP-2-3, Rev. 10. *Classification of Permanent Items*. Las Vegas, Nevada: CRWMS M&O. ACC: MOL.19990316.0006.

8.3 SOURCE DATA

LB0101DSTTHCR1.001. Pore Water Composition and CO2 Partial Pressure Input to Thermal-Hydrological-Chemical (THC) Simulations: Table 3 of AMR N0120/U0110 Rev01, "Drift-Scale Coupled Processes (Drift-Scale Test and THC Seepage) Models". Submittal date: 01/26/2001.

MO9901YMP98020.001. Matrix Flux at Repository for QB.OUT. Submittal date: 01/05/1999.

MO9901YMP98017.001. Fracture Flux at Repository for QB.OUT. Submittal date: 01/05/1999.

MO0004RIB00035.001. Rock Thermal Expansion. Submittal date: 04/07/2000.

MO9912SEPMKTDC.000. Chemical Compositions of TYPE E-1 (K) Cement. Submittal date: 12/07/1999.

MO9912DTMKCCOF.000. Chemical Compositions of Silica Fume. Submittal date: 12/07/1999.

MO0105MWDTHE05.009. Input and Output Files for Thermal Management Analysis for Low Temperature Repository Design for SR. Submittal date: 05/10/2001. Submit to RPC URN-0835

MO0104SPATEM00.001. ESF Temperature and Humidity Monitoring Record. Submittal date: 04/02/2001. Submit to RPC URN-0834

9. ATTACHMENTS

Attachment I: Calculations of Radiation on Ground Support Materials Page I-1 to I-11

Attachment II: Calculation of Cement Grout Density Page II-1 to II-2

ATTACHMENT I

CALCULATIONS OF RADIATION ON GROUND SUPPORT MATERIALS

I.1 Calculation Methodology

I.1.1 General Approach

This section explains the methodology used to characterize the time-dependent radiation field inside an emplacement drift. Absorbed doses and particle fluences are calculated for ground support materials exposed to radiation for time intervals up to 295 years after waste emplacement. Note that the fuel is 5 years old before waste emplacement, it will be 305 years old at 300 years after waste emplacement (300 years given in Section 4.2.6). The closest fuel age from the radiation source term is 300 years, which is 295 years after emplacement.

The MCNP4B code (Briesmeister 1997) is used to obtain neutron and gamma ray doses in the chosen ground support materials, namely cement grout for rock bolts and A 36 carbon steel for the steel sets. The drift geometry, materials, and radiation sources are input into MCNP4B to simulate the environment inside an emplacement drift. The code then calculates the neutron and gamma doses and associated neutron fluence impinging on the drift walls by utilizing various Monte Carlo particle transport techniques.

Spreadsheets are used to calculate the cumulative doses and particle fluences out to 295 years after waste emplacement. The quantities of interest for radiation damage evaluation are the dose (in rad) and the cumulative neutron fluence (in neutrons/cm^2).

The input and output files for the MCNP4B runs and associated spreadsheets were archived and submitted as a separate record package (CRWMS M&O 2000c).

I.1.2 Calculations

I.1.2.1 Physical Dimensions

The waste package height was determined by the summation of the following two dimensions:

- Distance from the excavated drift floor to the bottom of the pallet (80.6 cm, CRWMS M&O 2000e, Figure 5, P. 24).

- Distance from the bottom of the pallet to the waste package center (101.2 cm, calculated below).

The distance from the bottom of the pallet to the waste package center was determined from known pallet and 21-PWR dimensions. The calculations below correspond to the dimensional schematics in Figure I-1 (all units in cm).

From the bottom schematic: $\tan 30° = Y \div 107.5$, $Y = 62.1$, and $73.0-Y = 73.0-62.1 = 10.9$.

The value 10.9 is then equal to the quantity (H-X) in the top schematic: $X = 78.2 \div \cos 30° = 90.3$, and

$$H-X = 10.9$$
$$H = 10.9 + 90.3 = 101.2$$

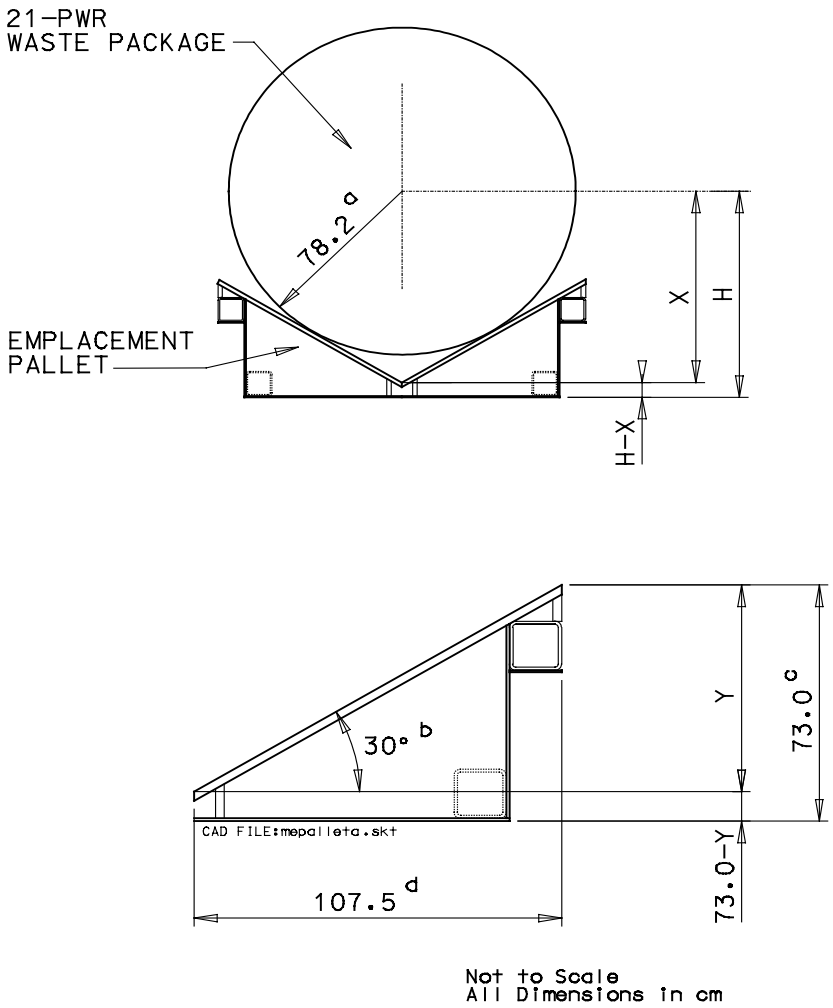

mepalleta.PPT

[a] From CRWMS M&O 1999p, p. II-1. 156.4 ÷ 2 = 78.2
[b] From CRWMS M&O 2000d, p. II-1.
[c] From CRWMS M&O 2000d, p. II-1.
[d] From CRWMS M&O 2000d, p. II-1. (184.52 ÷ 2) + 15.24 = 107.5

Figure I-1. Dimensional Schematic of Waste Package and Pallet Height

The three-dimensional geometric model used in MCNP4B calculations is essentially several concentric cylinders bounded on both ends by a reflecting surface (to simulate an infinite length). The cylinders representing the WP are offset 93.2 cm below the drift centerline (181.8 cm above the drift floor) to account for the drift invert and emplacement pallet heights. The invert and pallet themselves are omitted from the physical model for added conservatism. Invert and pallet materials would block radiation from the underbelly of the WP, therefore omitting these materials produces slightly higher doses. The model including WP internal dimensions (Assumption 5.7) is shown in Figure I-2. It should also be pointed out that the radiation fields are calculated on the surface of the excavated drift wall for the grout doses and 20.32 cm (8 in.) inward from the wall for the steel set doses.

I.1.2.2 Cement Grout Composition

Table 2 (see Section 4.1.11) contains the compositions and densities for all materials used in this calculation, except the cured cement grout, which is provided in this section. MCNP4B requires detailed elemental weight percents in order to process the interaction cross-sections used for neutron and gamma ray transport.

The cement grout used as a bond to hold the rock bolts in place has a W/CM ratio of 0.4 (28.57 percent water, 71.43 percent cementitious material, by weight as calculated in Attachment II). The mix itself is based on solid mass of 90 percent Type E-1(K) cement and 10 percent silica fume. Trace amounts of zinc and strontium were omitted from the composition. These components are used to calculate the elemental composition in Table I-1 Dry *Grout Mix Chemical Composition* and Table I-2 Cured *Grout Chemical Composition*. The cured grout chemical composition is used in the MNCP4B calculation. It is noted that the atom density is first calculated by MCNP4B, which can be found in output file *atmdens.out* (from CRWMS M&O 2000c). The calculated atom density is then used as input into the MCNP4B dose calculation files as part of the tally multiplier. The atom densities for cement grout and carbon steel are 8.86785×10^{-2} and 8.59449×10^{-2} atoms/bn-cm, respectively.

I.1.2.3 Gamma and Neutron Cumulative Dose

MCNP4B calculates the gamma and neutron doses on a per-source-particle basis. For time dependence, spreadsheets are used to calculate the dose rate (rad/hr) by multiplying the MCNP4B output by the gamma and neutron source strengths for the following post-emplacement times: 0, 25, 50, 75, 95, 125, 145, 195, 245, and 295 years. Cumulative dose is determined by summing up the time-integrated dose for each time interval. A sample calculation is shown in Table I-3 for the cumulative primary gamma dose in carbon steel.

To calculate the integrated dose at each time period, the following approximation is used:

$$D_t = D_1 \times e^{-\lambda t} \qquad \text{(Eq. I.1)}$$

where D_t = Dose rate at time t (rad/hr)
D_1 = Dose rate at the beginning of the time interval (rad/hr)
λ = Decay factor (1/yr), t = Time (yr)

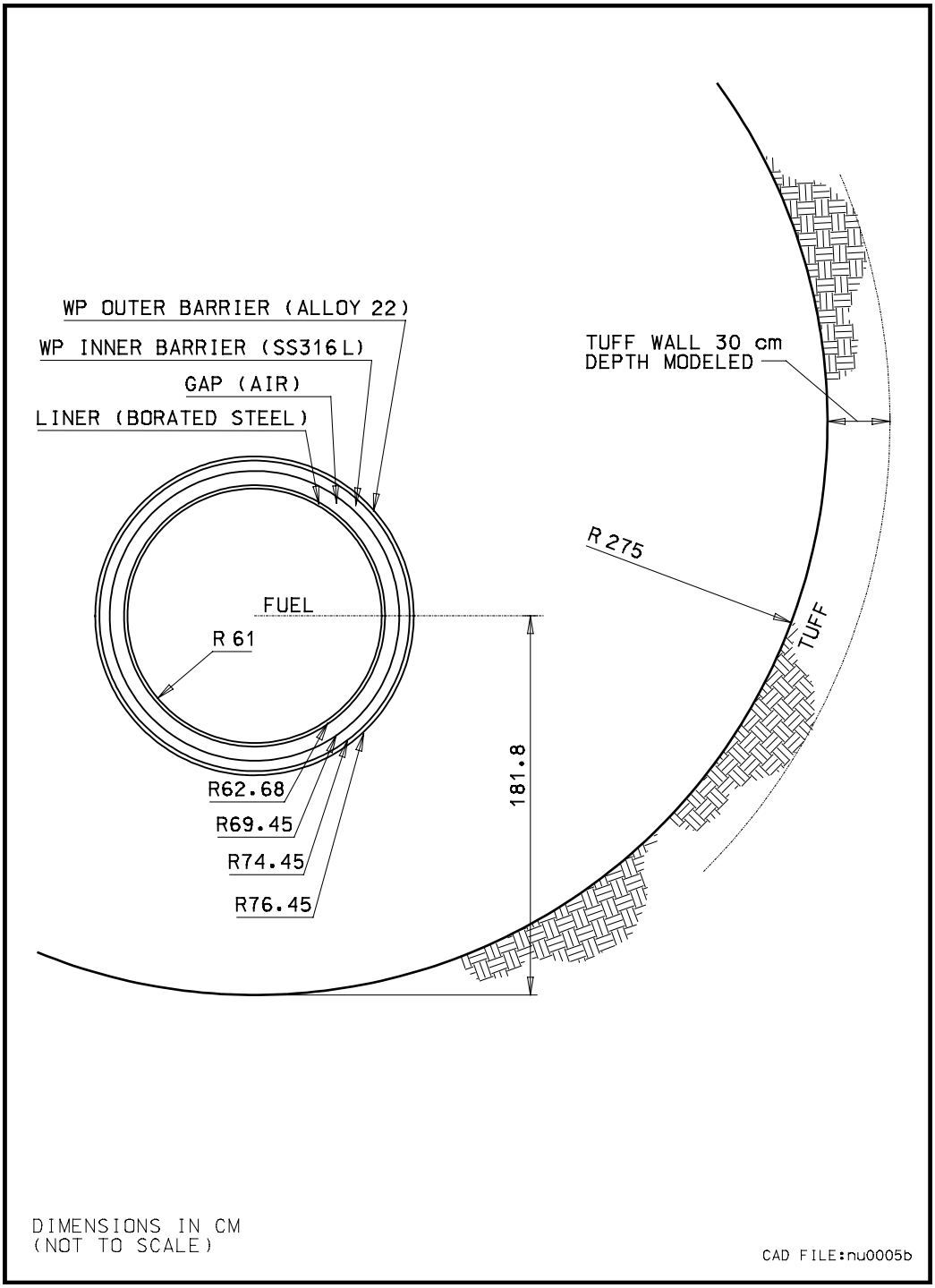

nu0005b.PP

Figure I-2. Calculation Geometry

Table I-1. Dry Grout Mix Chemical Composition

Type E-1(K) Cement, 90% of dry grout mix					Silica Fume, 10% of dry grout mix				Total Fraction (Dry Mix)[g]
Compound	Actual Weight %[a]	Adjusted Weight %[b]	Weight Fraction[c]	Fraction of Total[d]	Actual Weight %[e]	Adjusted Weight %[b]	Weight Fraction[c]	Fraction of Total[f]	
SiO_2	19.4	19.64	0.1964	0.1768	95	95.77	0.9577	0.0958	0.2725
Al_2O_3	5.2	5.26	0.0526	0.0474	0.7	0.71	0.0071	0.0007	0.0481
Fe_2O_3	2.8	2.83	0.0283	0.0255	0.3	0.30	0.0030	0.0003	0.0258
CaO	61.9	62.66	0.6266	0.5640	0.3	0.30	0.0030	0.0003	0.5643
MgO	1.4	1.42	0.0142	0.0128	0.2	0.20	0.0020	0.0002	0.0130
SO_3	6.9	6.99	0.0699	0.0629	0.8	0.81	0.0081	0.0008	0.0637
Na_2O	0.10	0.10	0.0010	0.0009	0.3	0.30	0.0030	0.0003	0.0012
K_2O	0.59	0.60	0.0060	0.0054	0.3	0.30	0.0030	0.0003	0.0057
SrO	0.05	0.05	0.0005	0.0005	0	0	0	0	0.0005
ZnO	0.02	0.02	0.0002	0.0002	0	0	0	0	0.0002
TiO_2	0.28	0.28	0.0028	0.0026	0	0	0	0	0.0026
P_2O_5	0.10	0.10	0.0010	0.0009	0	0	0	0	0.0009
Mn_2O_3	0.04	0.04	0.0004	0.0004	0	0	0	0	0.0004
C	0	0	0	0	1.3	1.31	0.0131	0.0013	0.0013
Total	98.78	100.00	1.0000	0.9000	99.2	100.00	1.0000	0.1000	1.0000

[a] From DTN: MO9912SEPMKTDC.000. The total does not equal 100% because the Loss on Ignition (LOI) component has been removed.
[b] Adjusted Weight % = (Actual Weight % ÷ Total) × 100
[c] Weight Fraction = (Adjusted Weight %) ÷ 100
[d] Fraction of Total = (Weight Fraction) × 0.9
[e] From DTN: MO9912DTMKCCOF.000 (Assumption 5.9). The total does not equal 100% because the Loss on Ignition (LOI) component has been removed.
[f] Fraction of Total = (Weight Fraction) × 0.1
[g] Total Fraction (Dry Mix) = (Fraction of Total, grout mix) + (Fraction of Total, silica fume)

Table I-2. Cured Cement Grout Chemical Composition

Water/cementitious material ratio = 0.4						
Compound	**Dry Mix Fraction[a]**	**Cured Fraction[b]**	**Molecular Weight[g]**	**Element Weight[c]**	**Element Fraction[d]**	**Oxygen Fraction[e]**
SiO_2	0.2725	0.1947	60.084	28.086	*0.0910*[f]	0.1037
Al_2O_3	0.0481	0.0343	101.961	53.964	*0.0182*	0.0162
Fe_2O_3	0.0258	0.0184	159.691	111.694	*0.0129*	0.0055
CaO	0.5643	0.4031	56.079	40.08	*0.2881*	0.1150
MgO	0.0130	0.0093	40.304	24.305	*0.0056*	0.0037
SO_3	0.0637	0.0455	80.057	32.06	*0.0182*	0.0273
Na_2O	0.0012	0.0009	61.979	45.98	*0.0006*	0.0002
K_2O	0.0057	0.0041	94.195	78.196	*0.0034*	0.0007
SrO	0.0005	0.0003	103.619	87.62	*0.0003*	0.0001
ZnO	0.0002	0.0001	81.379	65.38	*0.0001*	0.0000
TiO_2	0.0026	0.0018	79.898	47.9	*0.0011*	0.0007
P_2O_5	0.0009	0.0007	141.943	61.948	*0.0003*	0.0004
Mn_2O_3	0.0004	0.0003	157.873	109.876	*0.0002*	0.0001
C	0.0013	0.0009	12.011	12.011	*0.0009*	0.0000
H_2O	0	0.2857	18.0148	2.0158	*0.0320*	0.2537
Total	1.0000	1.0000			0.4728	*0.5272*[f]

[a] From Table I-1.
[b] Cured Fraction = (Dry Mix Fraction) × 0.7143, which is from Section I.1.2.2.
[c] This is the total molecular weight of the non-oxygen component, which is from Shleien et al. 1998, p. 2-31.
[d] Element Fraction = (Cured Fraction) × ((Element Weight) ÷ (Molecular Weight))
[e] Oxygen Fraction = (((Molecular Weight) – (Element Weight)) ÷ (Molecular Weight)) × (Cured Fraction)
[f] The italicized numbers are converted to weight % (multiply by 100) and used in Table 2.
[g] These are the values based on values under “Element Weight” column plus the oxygen component.

The decay factor λ is determined by:

$$\lambda = [1/(T_2-T_1)]Ln(D_1/D_2) \qquad \text{(Eq. I.2)}$$

where T_1 = Time at the beginning of the time interval (yr)
T_2 = Time at the end of the time interval (yr)
D_1 = Dose rate at T_1 (rad/hr)
D_2 = Dose rate at T_2 (rad/hr)

The integrated dose for the time interval T_1 to T_2 is then the integral of D(t)dt over T_1 to T_2, which is equal to:

$$\text{Dose (rad, integrated)} = (D_1 \times 8766/\lambda)[1-e^{-\lambda(T_2-T_1)}] \qquad \text{(Eq. I.3)}$$

where 8766 is the number of hours per year (24×365.25) to convert the dose rate from rad/hr to rad/yr.

The primary gamma doses are divided into nine source photon energy groups from 0.4 MeV to 4.0 MeV. Photons with energies outside this range are either too weak to penetrate the waste package or too few in number (in terms of photons/s) to contribute to the cumulative dose. The neutron doses are divided into seven source energy groups from 0.1 MeV to 20.0 MeV. These spectra correspond to the energy bins used in the source files *PWR.gamma.source* and *PWR.neutron.source* (CRWMS M&O 1999l, Attachment IV).

Table I-3 below shows how the cumulative doses were calculated using Eqs. I.2 and I.3. The data in this table are based on outputs from MCNP4B (CRWMS M&O 2000c). The example chosen is the dose in cement grout due to primary gamma rays between 0.4 and 0.6 MeV in energy (one of the nine gamma energy bins).

Table I-3. Sample Calculation – Cumulative Gamma Dose in Cement Grout (0.4 MeV to 0.6 MeV)[a]

Year[b]	photons/s-assembly[c]	photons/s-WP[d]	rad/hr-source[e]	rad/hr[f]	decay constant (yr-1)[g]	rad (integrated)[h]	rad (cumulative)[i]
0	1.42E+15	2.98E+16	3.82E-16	11.39	N/A	N/A	N/A
25	2.46E+13	5.17E+14	3.82E-16	0.20	0.16223	6.05E+05	6.05E+05
50	1.21E+13	2.54E+14	3.82E-16	0.10	0.02838	3.10E+04	6.36E+05
75	6.41E+12	1.35E+14	3.82E-16	0.05	0.02541	1.57E+04	6.52E+05
95	3.90E+12	8.19E+13	3.82E-16	0.03	0.02484	7.10E+03	6.59E+05
125	1.87E+12	3.93E+13	3.82E-16	0.02	0.02450	5.83E+03	6.65E+05
145	1.15E+12	2.42E+13	3.82E-16	0.01	0.02431	2.08E+03	6.67E+05
195	3.52E+11	7.39E+12	3.82E-16	2.82E-03	0.02368	2.37E+03	6.69E+05
245	1.18E+11	2.48E+12	3.82E-16	9.47E-04	0.02186	7.53E+02	6.70E+05
295	4.94E+10	1.04E+12	3.82E-16	3.96E-04	0.01741	2.77E+02	6.70E+05

[a] 0.4 MeV to 0.6 MeV source photon energy.
[b] Years after emplacement.
[c] From CRWMS M&O 1999l, Attachment IV, electronic file:*PWR.gamma.source*.
[d] photons/s-WP = (photons/s-assembly) × (21 assemblies/WP).
[e] From CRWMS M&O 2000c, MCNP4B output file *gam400.out.*
[f] rad/hr = (photons/s-WP) × (rad/hr-source).
[g] From Eq. I.2.
[h] From Eq. I.3.
[i] The cumulative dose is the sum of the integrated dose from year to year.

The doses are calculated in cement grout and carbon steel at the time intervals specified previously. Spreadsheets are used to convert the results from dose rate (in rad/hr) to cumulative dose (rad) using Eqs. I.2 and I.3 (see sample above). Table I-4 shows the dose results.

I.1.2.4 Cumulative Neutron Fluence

The cumulative neutron fluence is the chief indicator of radiation damage in ductile, metallic material (such as steel ground support) and is calculated at the same time intervals as previously stated. Spreadsheets are used to convert the results from fluence rate (in n/cm^2-s) to cumulative fluence (n/cm^2) using Eq. I.4, and Eq. I.5 below.

$$\lambda = [1/(T_2-T_1)]\ \mathrm{Ln}\ (\Phi_1/\Phi_2) \qquad \text{(Eq. I.4)}$$

$$\text{Fluence (n/cm}^2) = (\Phi_1 \times 3.156\text{E+07}/\lambda)[1-e^{-\lambda(T_2-T_1)}] \qquad \text{(Eq. I.5)}$$

where Φ_1 = Neutron fluence rate at the beginning of the time interval (n/cm^2-s)
Φ_2 = Neutron fluence rate at the end of the time interval (n/cm^2-s)
3.156E+07 = Number of seconds per year
λ = Decay constant (yr^{-1})
T_2 = Time at the end of the time interval (yrs)
T_1 = Time at the beginning of the time interval (yrs)

For radiation damage purposes, the gamma fluence (photons/cm^2) impinging on the grout or steel is unimportant and is not calculated.

The neutron fluence results shown in Table I-5 are divided into 2 energy groups due to the fact that neutrons with kinetic energies above 1 MeV are more damaging to materials.

Table I-4. Dose Results Summary

Year	Carbon Steel Dose							
	Primary Gamma		Neutron		Secondary Gamma[a]		Total	
	rad/hr	Cumulative rad	rad/hr	Cumulative rad	rad/hr	Cumulative rad	rad/hr	Cumulative rad
0	615.51	N/A	7.71E-03	N/A	0.11	N/A	615.63	N/A
25	118.45	6.05E+07	2.97E-03	1.09E+03	0.04	1.61E+04	118.49	6.06E+07
50	60.92	7.93E+07	1.24E-03	1.52E+03	0.02	2.25E+04	60.94	7.94E+07
75	33.68	8.94E+07	5.77E-04	1.71E+03	8.52E-03	2.53E+04	33.69	8.94E+07
95	21.14	9.41E+07	3.53E-04	1.79E+03	5.21E-03	2.65E+04	21.15	9.41E+07
125	10.56	9.81E+07	2.19E-04	1.87E+03	3.22E-03	2.76E+04	10.56	9.82E+07
145	6.63	9.96E+07	1.84E-04	1.90E+03	2.70E-03	2.81E+04	6.63	9.96E+07
195	2.10	1.01E+08	1.54E-04	1.98E+03	2.27E-03	2.92E+04	2.10	1.01E+08
245	0.67	1.02E+08	1.47E-04	2.04E+03	2.16E-03	3.02E+04	0.67	1.02E+08
295	0.22	1.02E+08	1.43E-04	2.11E+03	2.11E-03	3.11E+04	0.22	1.02E+08
Year	**Cement Grout Dose**							
0	373.84	N/A	0.42	N/A	0.08	N/A	374.35	N/A
25	67.16	3.57E+07	0.16	5.94E+04	0.03	1.20E+04	67.36	3.58E+07
50	34.00	4.63E+07	0.07	8.31E+04	0.01	1.68E+04	34.08	4.64E+07
75	18.75	5.19E+07	0.03	9.34E+04	6.34E-03	1.89E+04	18.79	5.20E+07
95	11.76	5.45E+07	0.02	9.78E+04	3.88E-03	1.98E+04	11.78	5.47E+07
125	5.87	5.68E+07	1.19E-02	1.02E+05	2.40E-03	2.06E+04	5.89	5.69E+07
145	3.69	5.76E+07	1.00E-02	1.04E+05	2.01E-03	2.09E+04	3.70	5.77E+07
195	1.17	5.85E+07	8.43E-03	1.08E+05	1.69E-03	2.18E+04	1.18	5.87E+07
245	0.37	5.89E+07	8.01E-03	1.11E+05	1.61E-03	2.25E+04	0.38	5.90E+07
295	0.12	5.89E+07	7.81E-03	1.15E+05	1.57E-03	2.32E+04	0.13	5.91E+07

[a] Secondary gammas are produced by neutrons interacting with the surrounding material and can contribute to the dose.

Table I-5. Neutron Fluence Results Summary

Year	Cumulative Neutron Fluence on Carbon Steel (n/cm^2)		
	Energy ≤ 1 MeV	**Energy > 1 MeV**	**Total**
0	N/A	N/A	N/A
25	3.38E+14	1.15E+13	3.50E+14
50	4.73E+14	1.61E+13	4.89E+14
75	5.32E+14	1.82E+13	5.50E+14
95	5.57E+14	1.90E+13	5.76E+14
125	5.79E+14	1.98E+13	5.99E+14
145	5.90E+14	2.02E+13	6.11E+14
195	6.13E+14	2.10E+13	6.34E+14
245	6.34E+14	2.17E+13	6.55E+14
295	6.53E+14	2.24E+13	6.76E+14
Year	**Cumulative Neutron Fluence on Grout (n/cm^2)**		
	Energy ≤ 1 MeV	**Energy > 1 MeV**	**Total**
0	N/A	N/A	N/A
25	3.36E+14	1.09E+13	3.47E+14
50	4.70E+14	1.52E+13	4.85E+14
75	5.28E+14	1.71E+13	5.45E+14
95	5.53E+14	1.79E+13	5.71E+14
125	5.75E+14	1.86E+13	5.94E+14
145	5.86E+14	1.90E+13	6.05E+14
195	6.09E+14	1.98E+13	6.29E+14
245	6.29E+14	2.04E+13	6.50E+14
295	6.49E+14	2.11E+13	6.70E+14

ATTACHMENT II

CALCULATION OF CEMENT GROUT DENSITY

Attachment II: Calculation of Cement Grout Density

The calculation of cement grout density is determined based on the following conditions:

W/CM ratio of the cement grout is equal to 0.4.
The cement grout is composed of 90% of cement and 10% of silica fume by solid mass.
The specific gravity values of silica fume and Type K expansive cement are 2.2 and 3.12, respectively (Section 5.4).

Calculation:

Since a unit weight of grout is composed of cementitious material (i.e., cement and silica fume) and water, the following equations are applicable:

$$W_{gt} = W_w + W_{cm} \qquad \text{(Eq. II.1)}$$

$$W_{cm} = W_c + W_{sf} \qquad \text{(Eq. II.2)}$$

where W_{gt}, W_w, W_{cm}, W_c, and W_{sf} are weights of grout, water, cementitious material, cement, and silica fume, respectively.

Based on W/CM of 0.4 ($W_w = 0.4W_{cm}$), Eq. II.1 becomes

$$W_{gt} = 0.4\ W_{cm} + W_{cm} = 1.4\ W_{cm} \qquad \text{(Eq. II.3)}$$

For 1 kg of grout, Eq. II.3 gives: W_{gt} = 1 kg = 1.4 W_{cm}, thus, W_{cm} = 0.714 kg. Then substituting into Eq. II.1, W_w = 0.286 kg. Since in the grout mix W_c is 90% of W_{cm}, W_c = 0.714 kg x 0.9 = 0.643 kg. Also, since W_{sf} = 0.1 W_{cm}, W_{sf} = 0.714 kg x 0.1 = 0.071 kg.

Eq. II.1 can be expressed in terms of volume, which is

$$V_{gt} = V_w + V_{cm} \qquad \text{(Eq. II.4)}$$

where V_{gt}, V_w, and V_{cm} are volumes of grout, water and cementitious material, respectively.

Eq. II.4 can also be expressed as

$$V_{gt} = V_w + V_c + V_{sf} \qquad \text{(Eq. II.5)}$$

where V_c and V_{sf} are volumes of cement and silica fume, respectively.

By substituting the weight and density values into Eq. II.5 and noting that volume is equal to weight divided by density, V_{gt} = [(0.286 kg /1 g/cm^3) + (0.643 kg /3.12 g/cm^3) + (0.071 kg / 2.2 /cm^3)] (1000g/kg) = 524 cm^3. Thus, for 1 kg of cement grout, its density is calculated to be 1.91 g/cm^3 (i.e., 1 kg / 524 cm^3).