KERR-McGEE CHEMICAL CORPORATION
KERR-McGEE CENTER • OKLAHOMA CITY, OKLAHOMA 73125

April 5, 2001

Mr. Charles L. Cain, Chief
Licensing Branch
Division of Nuclear Materials Safety
U.S. Nuclear Regulatory Commission – Region IV
611 Ryan Plaza Drive, Suite 400
Arlington, TX 76011

Re: Kerr-McGee Technical Center
Docket No. 040-08006; License No. SUB-986
Control No. 468057

Dear Mr. Cain:

Enclosed herewith are four copies of the Revised Decommissioning Plan for the Kerr-McGee Technical Center. One of these four copies is intended to go to the Region IV Docket for this site. An additional copy has been provided to Mike Broderick with Oklahoma Department of Environmental Quality.

These revisions are in accord with the notice of revisions provided to you in my letter of November 10, 2000.

Once Region IV staff has performed a preliminary review of the revised Decommissioning Plan, my team would appreciate the opportunity to meet with you and your team in Arlington to explain our process and answer any questions that NRC staff may have.

Please feel free to contact me at (405)270-2288 with any questions or to schedule the subsequent meeting in Arlington.

Sincerely,

Jess Larsen

Jess Larsen
Program Manager
Enclosures

Cc: Mike Broderick, ODEQ

jl040501.le1

KERR-McGEE CHEMICAL, LLC
Technical Center Decommissioning Plan
NRC License: SUB-986
Docket 040-08006

TABLE OF CONTENTS

1 INTRODUCTORY INFORMATION 1-1

1.1 PURPOSE 1-1
1.2 LICENSEE IDENTIFICATION 1-2
1.3 LICENSEE ACTIVITIES 1-2
1.3.1 Corporate R&D Center 1-2
1.3.2 Kerr-McGee Chemical, LLC R&D Center 1-2

2 FACILITY INFORMATION 2-1

2.1 SITE AND GROUNDS 2-1
2.2 NUCLEAR MATERIALS USE HISTORY 2-1
2.2.1 Byproduct Material License (35-12636-06)[2] 2-1
2.2.2 Source Material License (SUB-986)[1] 2-2
2.2.3 Non-Routine and Other Releases of Source Material 2-5
2.3 PREVIOUS DECOMMISSIONING ACTIVITIES 2-6
2.3.1 Licensed Source Material Decontamination Activity 2-6
2.3.2 Current Source Material Activities 2-9
2.4 GROUNDWATER 2-9
2.4.1 Regional Hydrogeology 2-9
2.4.2 Site Hydrogeology 2-10
2.4.3 Groundwater Occurrence and Movement 2-10
2.4.4 Groundwater Quality 2-10
2.4.5 Groundwater Impacts From Licensed Activities 2-11
2.4.6 Local Groundwater Uses 2-13
2.4.7 Oklahoma City Municipal Water and Sewer System 2-13
2.4.8 Shallow Groundwater Impacts From Excavation Activities 2-13

3 DESCRIPTION OF PLANNED DECOMMISSIONING ACTIVITIES 3-1

3.1 DECOMMISSIONING OBJECTIVE 3-1
3.2 RADIOLOGICAL CRITERIA FOR DECOMMISSIONING AND UNRESTRICTED RELEASE 3-1
3.2.1 Licensed Radionuclides Present 3-1
3.2.2 Determination of Background 3-1
3.2.3 Site Characterization 3-3
3.2.4 Release Criteria for Radionuclides on Buildings and Surfaces 3-5
3.2.5 Release Criteria for Materials and Equipment 3-5
3.2.6 Release Criteria for Soils 3-6
3.2.7 Release Criteria for Groundwater 3-7
3.2.8 Overall Release Criteria 3-7
3.2.9 ALARA Considerations 3-7
3.3 CLEANUP CANDIDATES AND TASKS 3-8
3.3.1 Uranium Calibration Test Pits 3-8
3.3.2 Surface Soils 3-8
3.3.3 Laboratories 3-8
3.4 DECOMMISSIONING WASTE MANAGEMENT 3-8
3.4.1 Disposal Location 3-8
3.4.2 Waste Generation 3-9
3.4.3 On-Site Storage 3-9

3.4.4 Free Release of Materials *3-9*
3.5 CREDIBLE ACCIDENTS RESULTING FROM DECOMMISSIONING ACTIVITIES 3-9
3.5.1 Off-Site Radiological Accident Scenario *3-10*
3.5.2 On-Site Radiological Accident Scenario-Radiation Worker *3-13*

4 DECOMMISSIONING ORGANIZATION AND ADMINISTRATION 4-1

4.1 LICENSEE MANAGEMENT ORGANIZATION 4-1
4.1.1 Corporate Management Organization *4-1*
4.1.2 Decommissioning Group Management Organization *4-1*
4.1.3 Contractor Assistance *4-1*
4.2 POLICIES AND PROCEDURES ORGANIZATION 4-1
4.2.1 Objective *4-1*
4.2.2 Responsibilities *4-2*
4.2.3 Written Policies, Procedures and/or Work Permits *4-2*
4.2.4 Worker Training *4-2*
4.2.5 Safety Policies and Procedures *4-2*
4.2.6 Coordination of Decommissioning Activities Between Corporate and KMCLLC Management *4-2*
4.2.7 Applicability of KMCLLC Facility Policies and Procedures *4-3*
4.2.8 Contingency Situations *4-3*
4.3 QA/QC RESPONSIBILITIES 4-3
4.3.1 Objective *4-3*
4.3.2 Administration *4-3*
4.3.3 Independent Audits *4-3*
4.4 NRC/STATE OF OKLAHOMA 4-3
4.4.1 NRC Site Inspections *4-3*
4.4.2 Coordination with State of Oklahoma *4-4*

5 METHODS TO PROTECT HEALTH AND SAFETY 5-1

5.1 HEALTH PHYSICS PROGRAM 5-1
5.1.1 Personnel Protection *5-1*
5.1.2 Personnel Monitoring Devices *5-1*
5.1.3 Work Area Monitoring Devices *5-1*
5.1.4 Ambient Exposure Monitoring *5-2*
5.1.5 Radiation Detection Instruments *5-2*
5.1.6 ALARA Committee *5-2*

6 FINAL RADIOLOGICAL STATUS SURVEY 6-1

6.1 OVERVIEW 6-1
6.2 SITE CONDITIONS AT TIME OF FINAL RADIOLOGICAL STATUS SURVEY 6-1
6.3 DATA QUALITY OBJECTIVES (DQOS) 6-1
6.4 FINAL STATUS SURVEY DESIGN PROCESS 6-2
6.4.1 Analyze Existing Data and Calculate Release Limits *6-2*
6.4.2 Identify, Classify, and Describe each Survey Unit. *6-2*
6.4.3 Select Representative Reference Areas or Reference Materials. *6-3*
6.4.4 Prescribe the Survey Methods and Instruments *6-3*
6.4.5 Specify the Reference Coordinate System. *6-3*
6.4.6 Specify the Sample Collection Procedures *6-4*
6.4.7 Determine the Data Collection Requirements for Statistical Tests *6-4*
6.4.8 Determine Bias Data Collection Requirements *6-5*
6.4.9 Specify Required Level of Beta/Gamma Scan Measurements *6-6*
6.4.10 Specify Contingency Action *6-6*
6.5 FINAL STATUS SURVEY INSTRUMENTAION 6-6
6.5.1 Unshielded 3" x 0.5" NaI Gamma Detector *6-7*
6.5.2 Shielded 3" x 0.5" NaI Gamma Detector *6-7*

6.5.3 Micro-R Meters *6-7*
6.5.4 Gross Alpha/Beta and Beta/Gamma Detector *6-7*
6.5.5 Soil Counter (Gamma Spectroscopy) *6-7*
6.6 EVALUATION OF FINAL STATUS SURVEY RESULTS 6-9
6.6.1 Review and Approval of the Survey Design *6-9*
6.6.2 Initial Data Verification *6-9*
6.6.3 Data Validation and Evaluation *6-10*
6.7 DOCUMENTATION OF FINAL STATUS SURVEY RESULTS 6-13
6.8 FINAL STATUS SURVEY ADMINISTRATION AND CONTROL 6-13
6.8.1 Project Organization *6-13*
6.8.2 Training *15*
6.8.3 Radiation Protection Program *15*
6.8.4 Quality Assurance Program *15*
6.9 PETITION FOR UNRESTRICTED USE AND TERMINATION OF LICENSE SUB-986[1] 16

7 SCHEDULE OF DECOMMISSIONING ACTIVITIES 7-1

7.1 TASK PROJECTIONS 7-1

8 DECOMMISSIONING FUNDING 8-1

8.1 DECOMMISSIONING ESTIMATE AND SURETY PROVISIONS 8-1

9 PHYSICAL SECURITY 9-1

Appendices

Appendix A – NEXTEP Technical Memorandum: Groundwater Pathway Analysis and DCGL Derivation for KMTC, Revision 1
Appendix B – NEXTEP Technical Memorandum: Subsurface Uranium DCGLw for KMTC Test Pit, Revision 1
Appendix C – NEXTEP Technical Memorandum: Derivation of Surface Soil DCGLs for KMTC, Revision 1
Appendix D – NEXTEP Technical Memorandum: Derivation of Indoor Surface DCGLs for KMTC, Revision 1
Appendix E – NEXTEP Technical Memorandum: Derivation of Outdoor Scan Thresholds and MDCR for KMTC, Revision 1
Appendix F – NEXTEP Technical Memorandum: Derivation of Indoor Scan Thresholds for KMTC, Revision 1

Tables

2.1 Kerr-McGee Technical Center Locations to be Surveyed
2.2 Kerr-McGee Technical Center Uranium Calibration Test Pit Contents
2.2 Kerr-McGee Technical Center Laboratory Contamination History
2.3 Kerr-McGee Technical Center Groundwater Monitoring Results

3.1 Summary of Background Data and Thresholds
3.2 Background Reference Data
3.3 Building Characterization Data
3.4 Soil Characterization Data
3.5 Building Surfaces Release Criteria
3.6 Release Criteria for Removable Materials & Equipment
3.7 Subsurface Uranium Release Limits for KMTC Test Pit
3.8 Surface DCGLs for KMTC
3.9 Employee Radiation Exposure History

5.1 Kerr-McGee Technical Center Radiation Monitoring Instruments

6.1 Factors to be considered for Modification of Key Parameters
6.2 Final Status Survey Screening Test

8.1 Kerr-McGee Technical Center Cost Estimate

Figures

2.1 Kerr-McGee Technical Center Facility and Grounds
2.2 Kerr-McGee Technical Center Photo
2.3 Kerr-McGee Technical Center before 1985
2.4 Kerr-McGee Technical Center after 1985
2.5 Kerr-McGee TSSL Building
2.6 Uranium Calibration Test Pit Construction Details
2.7 Uranium Test Pit Monitoring Well – 1 Installation Diagram
2.8 Uranium Test Pit Monitoring Well – 2 Installation Diagram
2.9 Uranium Test Pit Monitoring Well – 3 Installation Diagram
2.10 Uranium Test Pit Monitoring Well – 4 Installation Diagram
2.11 Uranium Test Pit Monitoring Well – 5 Installation Diagram
2.12 Uranium Test Pit Monitoring Well – 6 Installation Diagram
2.13 Uranium Test Pit Monitoring Well – 7 Installation Diagram
2.14 Uranium Test Pit Monitoring Well – 8 Installation Diagram
2.15 Uranium Test Pit Monitoring Well – 1 Soil Boring Log
2.16 Uranium Test Pit Monitoring Well – 2 Soil Boring Log
2.17 Uranium Test Pit Monitoring Well – 3 Soil Boring Log
2.18 Uranium Test Pit Monitoring Well – 4 Soil Boring Log
2.19 Uranium Test Pit Monitoring Well – 5 Soil Boring Log
2.20 Uranium Test Pit Monitoring Well – 6 Soil Boring Log
2.21 Uranium Test Pit Monitoring Well – 7 Soil Boring Log
2.22 Uranium Test Pit Monitoring Well – 8 Soil Boring Log

4.1 Kerr-McGee Technical Center Decommissioning Organization

6.1 FSS Data Evaluation Process

7.1 Kerr-McGee Technical Center Decommissioning Schedule (Gantt Chart)

Drawings

TECHCNTR_001_REV_0	Kerr-McGee Technical Center Site Plan
TECHCNTR_002_REV_0	Kerr-McGee Technical Center Facility and Test Pit Area
TECHCNTR_003_REV_0	Kerr-McGee Technical Center Uranium Test Pit Area Potentiometric Surface 2/22/2000
TECHCNTR_004_REV_0	Kerr-McGee Technical Center Outdoor Impacted Areas and Survey Unit Designation 2/13/01
TECHCNTR_005_REV_0	Kerr-McGee Technical Center Monitoring Well Construction Details Relative to Depth of Uranium Test Pit Area 2/14/01
TECHCNTR_006_REV_0	Kerr-McGee Technical Center Indoor Survey Units

REFERENCES

1. NRC Source Material License SUB-986.
2. Byproduct Materials License 35-12636.06.
3. Letter Dated March 2, 1998, NRC Region IV – terminating the Byproduct Material License.
4. NMSS Handbook for Decommissioning Fuel Cycle and Materials Licensees. NUREG/BR0241, March 1997.
5. Title 10 Code of Federal Regulations Section 51.22 (c) (14) (v) – Use of radioactive materials for research and development and for educational purposes.
6. Title 10 Code of Federal Regulations Section 20.302 – Method for obtaining approval of proposed disposal procedures.
7. Title 10 Code of Federal Regulations Section 20.304.
8. Title 10 Code of Federal Regulations Section 40.36 – Federal Assurance and Recordkeeping for Decommissioning.
9. MARRSSIM, Section 5.5.2.2.
10. Working Draft Regulatory Guide on Release Criteria for Decommissioning: NRC Staff's Draft for Comment. NUREG 1500, August 1994.
11. NRC "Guidelines for Decontamination of Facilities and Equipment Prior to Release for Unrestricted Use or termination of Licenses for Byproduct, Source, or Special Nuclear Material."
12. Colorado Department of Health, Interoffice Communication, Fugitive Dust Emissions, September 30, 1981.
13. Radiological Health Handbook, U.S. Department of Health, Education, and Welfare, Public Health Service, Revised 1970.
14. Environmental Protection Agency, "Limiting Values of Radionuclide Intake and Air Concentration and Dose Conversion Factors for Inhalation, Submersion, and Ingestion," EPA-520/1-88-020, Federal Guidance Report No. 11, September 1988.
15. U.S. NRC, NUREG/CR-5512, PNL-7994, "Residual Radioactive Contamination from Decommissioning", Volume 1, Reprinted June 1994.
16. Turner, D. B., "Workbook of Atmospheric Dispersion Estimates," U.S. Department of Health, Education, and Welfare, Cincinnati, OH, 1969.
17. ANSI N323-1978, "Radiation Protection Instrumentation Test and Calibration."
18. Cimarron Quality Assurance Program Plan (QAP).
19. NRC Inspection Report #70-925/97-02.
20. NRC Inspection Report #70-925/98-02, November 3, 1998.
21. NRC Inspection Report #70-925/99-01

22. NUREG 1505.
23. MARSSIM, p. 4-15.
24. Visual Sample Plan (VSP) Program, http://dqo.pnl.gov/vsp.
25. MARSSIM, Table 8.2.

1 Introductory Information

1.1 Purpose

The purpose of this Decommissioning Plan is to establish the management and technical protocols that Kerr-McGee Chemical, LLC (KMCLLC) will follow in addressing the presence of residual radioactivity at the Kerr-Mc-Gee Technical Center (KMTC) and allow it to terminate NRC Source Material License SUB-986[1] and release the entire facility for unrestricted use. KMCLLC may request that the western portion of the licensed site be released for unrestricted use prior to license termination in support of the Oklahoma Department of Transportation's plans to widen Highway #74.

The KMTC used nuclear materials under NRC source and byproduct materials licenses SUB-986[1] and 35-12636-06[2], respectively. Byproduct material use consisted of sealed standards, check sources and integral components in analytical equipment. These byproduct sources have been removed from the facility, returned to the manufacturer, and the Byproduct Material License terminated by NRC Region IV by letter dated March 2, 1998[3].

The KMTC no longer uses specifically licensed source materials and is therefore being decommissioned to allow for license termination and unrestricted release. KMTC decommissioning activities will include surveys, removal of any residual contamination, and the release of laboratories, property, and support facilities such as sample storage and preparation facilities and five test pits (used for prospecting instrument calibration) where source materials were used. When completed, the facility will meet all applicable unrestricted release criteria.

Kerr-McGee Chemical, LLC (KMCLLC) has been notified by the Oklahoma Department of Transportation (ODOT) that it will be expanding State Highway 74 and thus will be expanding the existing right-of way that may include the area where the uranium calibration test pits are located. This expansion will involve constructing a multiple-lane median separated highway with frontage roads. This factor gives additional impetus to expedite the removal and release of the uranium Calibration test pit area from License SUB - 986[1].

Decommissioning will be performed under written policies and procedures, incorporating appropriate methods outlined in NUREG/BR-0241[4] as required. In accordance with NUREG/BR-0241[4] criteria, KMTC decommissioning activities fall under the Type III facility requirements since the authorized activities are covered under the categorical exclusion criteria in 10 CFR 51.22 (c) (14) (v) –" Use of radioactive materials for research and development and for educational purposes"[5]. Work with source materials at the KMTC was confined to small-scale experiments using uranium or thorium materials obtained from ores or process streams at its formerly licensed fuel cycle facilities and for the development, testing and calibration of instrumentation used for mineral prospecting.

The batch type laboratory experiments were performed to develop and prove new or proposed changes to processes for the extraction and purification of uranium and thorium. Successful laboratory testing led to operating facility process modifications or larger scale testing at other Kerr-McGee fuel cycle facilities. At no time did the KMTC engage in the scale of production activities associated with a fuel cycle facility.

The uranium calibration test pits, containing varying known concentrations of source material, were used to develop and prove methods to identify uranium ores and their approximate concentrations in various ore bodies.

1.2 Licensee Identification

License SUB-986[1] is currently managed by Kerr-McGee Chemical, LLC, (KMCLLC) which operates the KMTC to conduct Research and Development activities in support of its chemical facilities. Decommissioning activities will be coordinated and managed by the Kerr-McGee Corporation Safety and Environmental Affairs Division, which has both the experience and managerial oversight responsibility for decommissioning activities at Kerr-McGee's NRC licensed Cimarron facility. To the extent practicable, both personnel and procedures from the Cimarron facility will be employed to assure that the KMTC decommissioning is performed in accordance with all applicable regulatory requirements.

1.3 Licensee Activities

1.3.1 Corporate R&D Center

The KMTC was established in 1963 to provide a dedicated research and development facility for conducting chemical and radiological analyses, doing small quantity bench and batch scale research and development studies on manufacturing processes and investigating new chemicals of interest to the Corporation's various operating divisions. The KMTC also provided a core of highly experienced scientists and engineers to address technical and engineering problems and explore new technologies for application in support of the Corporation's initiatives. In this capacity, the KMTC conducted R&D work for the Chemical, Nuclear, Refining, Oil & Gas Exploration and Production, Off-shore Contract Drilling, Wood Products and Potash Mining divisions. The work with radioactive materials required that the KMTC have both a Byproduct and a Source Materials license.

1.3.2 Kerr-McGee Chemical, LLC R&D Center

The KMTC was turned over to Kerr-McGee Chemical, LLC (KMCLLC) management oversight in 1995. Many of Kerr-McGee's operating divisions had either been divested or were in the process of being divested at that time. KMCLLC was the only remaining Kerr-McGee operating division with R&D activities requiring Company controlled analytical and laboratory functions.

In January 1999, KMCLLC, through its West Chicago Project Office, informed Kerr-McGee Corporate management that it would no longer require the KMTC to maintain the source materials use authorizations provided by SUB-986[1] to support any work. This decision prompted KMCLLC to request that Kerr-McGee Corporation, through its Safety and Environmental Affairs Division, provide management and support in

decommissioning the KMTC for license termination and unrestricted release. Safety and Environmental Affairs Division personnel, in cooperation with KMCLLC management, Cimarron Facility Management and RSO, and the KMTC management and RSO, were assigned primary responsibility for working with NRC to complete decommissioning activities and achieve license termination.

2 Facility Information

2.1 Site and Grounds

The Kerr-McGee Technical Center (KMTC) is located in Oklahoma County approximately 15 miles northwest of downtown Oklahoma City and due West of Edmond at the intersection of NW 150th Street (City of Edmond 33rd Street) and State Highway 74 (Portland Avenue). The site comprises approximately 160 acres of land, with the facility buildings located toward the northern end of the facility grounds, promoting a rural setting. The facility buildings comprise approximately 10 acres (See Figure 2.1), with the rest of the land area being grassed or water and not used for facility activities. There are several lakes and ponds located between NW 150th Street (the southern site boundary) and the facility buildings (See Drawing TECHCNTR_001_REV_0). An overhead photograph, showing the KMTC and grounds in relation to the major roads that comprise its boundaries, is also provided in Figure 2.2.

KMTC activities were confined to the buildings and their immediately surrounding areas, which included a sample storage shed and the uranium calibration test pits. Areas that may have contained source materials consist only of certain laboratories within the buildings and other building areas where source materials were prepared and/or stored. The layout of the KMTC buildings and laboratories prior to 1985 is provided in Figure 2.3. The layout of the KMTC buildings and laboratories after 1985 is provided in Figure 2.4. Figure 2.4 also depicts all impacted areas where source materials were used throughout the life of the facility.

2.2 Nuclear Materials Use History

The KMTC had, at one time, both a Source Material license and a Byproduct Material license supporting its R&D activities. These licenses applied to work with source materials (e.g. ores and former fuel cycle facility operations process intermediates) carried out at the KMTC and to the analytical equipment needed for chemical and radiochemical laboratory analysis.

Typical dose monitoring results, using film badges, routinely showed occupational exposures to be less than 10 mrem/month (i.e., less than MDA) for those individuals working with radioactive materials. Routine monitoring of laboratory and work areas documented that surfaces were less than 200 dpm/100 cm^2 alpha smearable and less than 1,000 dpm/100 cm^2 alpha fixed. These routine monitoring results demonstrate that activities with radioactive materials were performed in a manner that maintained exposures to radioactive materials ALARA and did not result in contamination of work areas or personnel.

2.2.1 Byproduct Material License (35-12636-06)[2]

2.2.1.1 Authorized Use and Quantities

Byproduct Materials License 35-12636-06[2] authorized the possession and use of small, sealed sources needed to check, operate and calibrate analytical equipment. Their use was confined to well-defined functions and locations within the KMTC.

2.2.1.2 Laboratories Where Sealed Byproduct Materials Were Used

Byproduct nuclear materials were located and used only in the laboratories designated as C-5, C-9, C-23, C-25, D-3, E-4, E-6, E-22, E-24, E-26, E-26A, E-28, E-30, F-2, F-3, F-4, F-4A, F-6, F-8, F-12, Storage Building, Pilot Plant Area, Unit 400 Pilot Plant, Sample Prep Room, and the locked safe under the stairs of the Pilot Plant. There were never any instances where byproduct material contamination was encountered. When not in use, the byproduct materials were stored in the locked safe with access controlled by the facility RSO. The safe was located under the stairs to the Pilot Plant away from general activity.

2.2.1.3 Byproduct Materials License Terminated

The sealed byproduct material sources were removed and returned to their manufacturers (Sentex, KayRay and TN Industries), and the license subsequently terminated by NRC Region IV. License termination was based upon the submittal of certificates from the manufacturers showing that the listed sources were received sealed and that there was no leakage or contamination present. There were some small activity sealed sources that were transferred to the Cimarron facility for shipment processing and subsequent transfer for disposal at a licensed LLRW disposal facility.

2.2.2 Source Material License (SUB-986)[1]

2.2.2.1 Authorized Use and Quantities

Source Material License SUB-986[1] authorizes the receipt of small quantities of source materials for use in experimentation (research and development). Source materials could be in any form but were typically uranium and thorium containing ores from NRC or Agreement State licensed facilities, process stream materials from a NRC licensed natural uranium conversion facility, and depleted uranium process materials from a NRC licensed facility. License SUB-986[1] reflects this small quantity use commitment in its possession limits: 250 kilograms of natural uranium, 150 kilograms of natural thorium, and 35 kilograms of depleted uranium. These materials could be in any form.

Source materials were typically received in small quantities from Kerr-McGee's formerly licensed fuel cycle facilities or its Minerals Exploration Unit (core samples) to ensure that the KMTC would never maintain large quantities on-site. As work with various source materials was completed, the materials were returned to the facility from which they came.

2.2.2.2 Laboratories Where Source Materials Were Used

Use of the source materials authorized by the license was restricted to designated laboratories within the KMTC and in immediately surrounding designated sample storage or sample preparation areas as shown in Figures 2.4 and 2.5. KMTC personnel designated and posted those areas where source materials were present and used. The specific locations of laboratories where source materials were permitted for use and testing are listed below in Table 2.1. The room numbers in Table 2.1 correspond to the yellow shaded areas in Figures 2.4 and 2.5.

Of these areas, only the rooms identified in Table 2.3 were ever found to be contaminated at any given time and those impacted areas were localized and were easily decontaminated.

Table 2.1
Locations to be Surveyed

Building	Room Numbers			
Main	C1	C1a	C13	C17
	C19	C21	C23	C25
	C27	C29a	C29b	C33
	C39	F2/4	F4a	F12
	E2	E8	E10	E12
	E14	E22	E28	E30
Pilot Plant	P1	P2		
TSSL Bldg.	T1			
Storage Bldg.	S1			

In 1985 the KMTC facilities were expanded. The expansion was attached to the west wings of the existing facility and is shown in Figure 2.4. Construction of the new laboratory wing included the use of the exterior masonry C-19 and E-14 wall as a firebreak between the old and new sections. Smear surveys conducted prior to the addition verified that smearable alpha surface activity was below 200 dpm/100cm^2.

2.2.2.3 Uranium Calibration Test Pits

The Calibration Test Pit Area contained eight specially constructed in-ground vaults, three of which were empty and five of which contained known homogeneous concentrations of source material. These vaults were used to calibrate uranium prospecting equipment. The vaults were constructed by placing the source material in a 6 foot diameter vertical "tin-horn" standing on its end (a "tin-horn" is a section of corrugated pipe or culvert typically used to allow drainage under a road) that was sealed at the bottom with a steel plate and was 12 feet in length. The top 3 feet consisted of radiologically clean natural sand, the 3-9 foot depth interval contained the source material, and the bottom 3 feet also contained radiologically clean natural sand. A 4.5" outside diameter fiberglass line pipe was installed through the center which allowed the detectors to be lowered to various depths for calibration. Also, a 1" outside diameter water injection pipe was used to add water to the test pits to replicate field moisture conditions. These are both depicted on Figure 2.6. The uranium calibration test pit contents are described in Table 2.2 below:

Table 2.2
Test Pit Contents
Kerr-McGee Technical Center

Test Pit Number	Description of Ore/Concentrate
TP-1	Grants 0.23% U_3O_8
TP-2	Grants 0.50% U_3O_8
TP-3	Sand and Yellowcake 0.2% U_3O_8
TP-4	Mixed Powder River 0.2% U_3O_8
TP-5	Powder River – Top 0.5': 0.42% U_3O_8
	Center 5': 0.09% U_3O_8
	Bottom 0.5': 0.24% U_3O_8
TP-6	Contained no source material – never used
TP-7	Contained no source material – never used
TP-8	Contained no source material – never used

Approximately 32 cubic yards of source material were in place in the five uranium calibration test pits with an average U_3O_8 concentration of approximately 0.25 weight percent. The total amount of U_3O_8 present in the uranium calibration test pits was approximately 290 pounds. The bulk of the material was crushed ore and sand with yellowcake.

2.2.2.4 Support Facilities Where Source Materials Were Present

2.2.2.4.1 Sample Storage Facility

The sample storage facility is shown on Figure 2.4 as the Storage Building (S-1). The Storage Building was constructed such that source materials could be stored out of the weather. Stored materials consisted of geological core samples and boxes, drums from 5 to 55 gallons in size, small test cylinders (2 kg) of uranium hexafluoride, bottles, covered buckets, and cans or other containers. All source materials were sealed in some form of container and clearly labeled and identified as to concentration and facility of origin. Bulk shipments such as truckload quantities were never received at the KMTC.

2.2.2.4.2 Sample Preparation Facility

The sample preparation facility is shown on Figure 2.4 as the Sample Prep Room (P-2). The Sample Prep Room was enclosed and contained a ventilating hood. Samples were brought to the sample preparation area to be split, homogenized, screened, sifted, or pulverized as required to assure a representative and/or homogenous sample for testing or analysis. The Sample Prep Room contained laboratory size jaw and ball mills, splitters, pulverizers, and screens used for obtaining representative samples or batches for testing or analysis. Typical quantities prepared for testing or analysis ranged in weight from as little as 50 grams to several hundred kilograms.

2.2.2.5 Source Material Disposal Options

2.2.2.5.1 Return Material to Facility of Origin

When testing and analysis activities were completed, the source materials were typically returned to the facility of origin. The source materials, by being returned to the originating facility, were placed into the existing processing stream or designated disposal areas where they were of the same type (e.g. mill tailings).

2.2.2.5.2 Disposal at a Licensed Facility

In some cases, small amounts of source material were more easily combined and disposed at a licensed facility. Examples of candidates for this method would be soils that had been analyzed and/or tested for removal of uranium or thorium and received from other former Kerr-McGee facilities. Typically, these small volumes of soils were returned to the tailings impoundment at the former Grants uranium mill or sent to the Cimarron facility to be combined with decommissioning materials being sent to a licensed LLRW disposal facility.

2.2.2.5.3 On-site Disposal Areas

The KMTC solid waste disposal area for non-radioactive laboratory trash and chemical waste was excavated in 1995 and the material and some of the immediately surrounding soils were shipped to a permitted solid/hazardous waste disposal facility for incineration. KMTC records during this timeframe indicate that radioactive waste materials were not buried in this on-site disposal area.

2.2.3 Non-Routine and Other Releases of Source Material

2.2.3.1 Incidental Releases to the Laboratory Sewer System

The laboratories and support areas used for work with source materials typically had sinks, and in some cases floor drains. Testing was usually done in hoods, or areas equipped with drip pans to contain the source materials in the event of a spill. Although care was taken to remove test materials from test equipment, some small amounts are known to have been lost down the drains and sinks as a result of normal clean-up activities. The laboratories and support facilities where source materials were designated for use will be surveyed and the sinks and any floor drain traps will be surveyed to ensure that no residual contamination is present.

Facility records also show that analytical laboratory solutions containing very small amounts of source materials were disposed by releases to the sewer system via laboratory sinks. Records of these materials were maintained and show that volumes were typically in the 100-ml to 1000-ml quantity range and that releases occurred in this manner on a periodic basis.

2.2.3.2 Test Upsets Potentially Resulting In Spillage and Incidental Releases to the Drain System

Tests involving source materials, (such as ores), were planned and conducted in a manner to mitigate against the potential for upsets and spills that could result in any release. In practically all cases, experiments were designed and carried out over drip

pans to contain any spillage. As noted above, laboratories where such work was done will have the drain traps surveyed for potential contamination.

2.3 Previous Decommissioning Activities

2.3.1 Licensed Source Material Decontamination Activity

Routine contamination surveys were performed to assure that neither a build-up of laboratory material inventory or laboratory contamination would occur. Formal license action levels for addressing and cleaning laboratories and other work areas were established to closely monitor for contamination. Thorium release criteria, being more restrictive than for uranium, were chosen to establish the action criteria. Fixed contamination limits of 3000 dpm/100cm^2 maximum alpha, 1000 dpm/100cm^2 average alpha, and 200 dpm/100cm^2 or less smearable alpha were adopted. Routine bi-monthly contamination surveys were performed for laboratories where source and byproduct materials were used. Any areas with survey results above the action criteria required prompt clean up. The fact that these clean-up action levels are the same as those recommended in NUREG/BR-0241, Appendix C, Table 1[4] for such actions demonstrates that the laboratories were maintained in a releasable condition based upon release criteria in effect at the time.

The KMTC established a conservative contamination action criteria for all laboratory areas of >200 dpm/100cm^2 smearable. From 1973 to 1988 (i.e., a 15 year period), only 16 instances were encountered where contamination levels exceeded this action criteria. There have been no contamination incidences during the period from 1988 to present. The individual contamination instances and the degree of contamination at those locations are provided in Table 2.3.

Table 2.3

KERR –MCGEE TECHNICAL CENTER

LABORATORY CONTAMINATION HISTORY

DATE	LABORATORY	IMPACTED AREA	ALPHA SMEAR (dpm/100cm^2)
Mar '73	E-14	SX Unit	1500
June '75	F-2	Bench top	1600
	Sample Storage	Drum tops	1400-1600
Feb '76	E-8	Bench top	800
Apr '76	E-8	Bench top	400
	E-12	Hot plate	400
	F-4	Hood area	2000
June '76	Sample Prep	Drum surfaces	1000
Nov '80	E-14/C-19	Hood area	>200
Apr '81	E-8	Bench top	>200
Aug '81	E-8	Bench top	>200
Feb '84	E-8	Catch tray	>1000
	E-10	Hood area	400
	E-12	Hood area	12,000
Apr '84	E-8	Sink area	400
	E-12	Catch tray (hood)	12,000
June '84	E-12	Catch tray (hood)	10,000
June '85	C-13	Bench area	500-2000
Nov '86	TSSL sample prep	Bench area	400
Feb '87	F-12	Hood area	2000
Feb '88	E-8	Hood area	1000
	E-8	Bench top	600-10,000
Aug '88	E-8	Hood area	1250
	E-8	Desk	750

- Data from bi-monthly routine surveys performed at KMTC
- Action level: >200 dpm/100cm^2 alpha smearable
- Impacted Laboratories: E-8: 8 incidents; E-12: 4 incidents; E-14: 2 incidents; C-13, C-19, E-10, F-2, F-4, F-12, Sample Prep, Sample Storage, TSSL Sample Prep: 1 incident
- All impacted areas were cleaned to <200 dpm/100cm^2 alpha smearable following detection, next bi-monthly survey showed contamination removed.
- No areas exceeded the 2mR/hr criterion.

Significant remedial action should not be required in order to achieve unrestricted use status since routine bi-monthly surveys were performed in designated areas where source materials were used. In addition , there were no cases of contamination during the last 12 years.

Routine exposure rate surveys were also conducted to locate quantities of materials in the laboratories exhibiting an exposure rate greater than 2 mR/hour. In such instances the material was returned to controlled storage or placed in an isolated laboratory location (e.g. the back of a hood or cabinet) and/or was shielded to minimize exposure and the potential for spillage. The monitoring also assured that the laboratory did not become a storage area for a significant amount of material.

2.3.1.1 Laboratories Cleaned and Released for Other Uses

At the conclusion of tests with source materials or at the end of a project, the designated laboratory where the activity occurred was surveyed and cleaned, if required. The benches were wiped down and materials returned to storage or their location of

origin. If release criteria were met, the laboratory could be released for unrestricted use. However, certain laboratories remained as designated areas for source material testing. As noted above, all of the laboratories where source materials were used were monitored bi-monthly and cleaned if alpha smearable activity was greater than 200 dpm/100 cm^2 or gamma exposure rates exceeded 2 mR/hr.

2.3.1.2 Support Facilities Cleaned and Released for Other Use

Support facilities such as the sample storage and sample preparation areas were also routinely monitored and cleaned when necessary to keep the amount of residual radioactive materials and contamination to a minimum and to keep exposures as low as reasonably achievable (ALARA). As with the designated laboratories, the sample storage and preparation areas were maintained clean and below license action levels but were never formally released due to the potential for source materials to be used again as new projects were initiated.

2.3.1.3 On-Site Radioactive Material Burial Areas

A review of facility records indicated that some small amounts of radioactive waste materials (i.e. sample bottles) were disposed in accordance with 10 CFR 20.302[6] or 20.304[7] authorizations prior to 1977. These records do not indicate that radioactive material burials in accordance with 10 CFR 20.302[6] or 20.304[7] occurred at the KMTC Facility. Interviews with former employees present at the KMTC during this timeframe indicate that the small amounts of radioactive waste materials were transferred to and then disposed of on-site at the Cimarron facility prior to 1977. All radioactive waste materials from the KMTC after 1977 were managed by transferring the waste materials to the Cimarron facility to be combined with their decommissioning waste materials for off-site disposal at a licensed low-level radioactive waste disposal facility.

2.3.1.4 Sewer/Drain Lines

Source materials were restricted to specifically designated areas and test conditions were designed to mitigate against the spillage and loss to the sewer system. In this regard, and in conjunction with the routine survey protocol, there have been no formal activities to remove and replace segments of the drain or sewer systems in the designated laboratories and/or support facilities. As noted earlier, the drain traps in the designated use laboratories where source material was used will be inspected and surveyed for residual contamination.

2.3.1.5 Air/Hood Vents Cleaned

Although the laboratory hood systems were monitored and cleaned if alpha smearable activity greater than 200 dpm/100 cm^2 was found on the accessible surfaces, a formal release of these units has not been performed. Table 2.3 shows the historical KMTC contamination history. Scoping surveys have not shown accumulations of radioactive material on ventilation ducts, and Kerr-McGee does not expect to encounter significant accumulations of source material in these locations when the final status surveys are performed.

2.3.2 Current Source Material Activities

There have been no laboratory projects using source materials licensed under SUB-986[1] since 1998.

2.3.2.1 Decommissioning For Unrestricted Use

With the sale of the Company's Nuclear Division, the amount of work with source materials was significantly reduced, most testing was infrequent and typically was associated with testing and assaying of source materials from the KMCLLC West Chicago project.

The Nuclear Division assets were divested in the 1985-1986 time period. When the Chemical Division informed the Company in 1998 that it no longer needed a facility to perform testing on the source materials associated with West Chicago activities, the need for the source material license was eliminated and is the basis for the decision to terminate the KMTC source material license (SUB-986[1]). The KMTC decommissioning will result in the removal of the source materials from the uranium calibration test pits and the resulting disposal of the materials at a licensed LLRW disposal facility. All other outdoor areas will be characterized and, if necessary, remediated to meet the unrestricted release criteria. The laboratories and support facilities (i.e. sample preparation and storage areas) will be surveyed and, if necessary, decontaminated to meet the unrestricted release criteria.

2.4 Groundwater

2.4.1 Regional Hydrogeology

Shales of the Hennessey Group (Permian Age) crop out in the uranium calibration test pit area of the site. The shales are characterized as red-brown to orange-brown that weather to soils characterized as a reddish-brown or dark brown, clay-loam that is 8 to 12 inches thick. This top layer is difficult to till and overlies a claypan subsoil. The subsoil is about 26 inches thick. The upper part is a reddish-brown clay that contains slightly more clay and is more compact than the lower part which is a massive, calcareous clay.

These upper soils, known as the Renfrow Series, are naturally well drained with low permeability. The soils are high in natural fertility but are susceptible to water erosion in sloping fields. These upper zone soils result in a water bearing zone that produces little water and movement making it unsuitable for resource development.

The Garber-Wellington aquifer is beneath the Hennessey Group shales. The uppermost unit is the Garber sandstone, characterized as primarily an orange-brown to red-brown, fine grained sandstone, irregularly bedded with red-brown shale and some chert and mudstone conglomerate. Its thickness varies from 150 feet to 400 feet or more.

The lowermost unit is the Wellington Formation. It is primarily a red-brown shale and orange-brown, fine grained sandstone, containing maroon mudstone conglomerate and chert conglomerate to the south. The thickness ranges from 150 feet to 500 feet. The base of the Garber-Wellington fresh water zone in the KMTC vicinity is at approximately 525 feet.

2.4.2 Site Hydrogeology

Site hydrogeology is much the same as described in the regional hydrogeology section above. In 1991, Kerr-McGee drilled a water well to provide water for a lake located to the south of the KMTC buildings. The lake, besides its aesthetic value, provided emergency water for fire and other emergency situations. In times of drought the use of Oklahoma City water supplied to the facility could be curtailed and this well allows for uninterrupted activities.

The facility water well was completed to intersect water-bearing horizons between 212 and 450 feet. There were insufficient quantities of water at depths nearer the surface.

2.4.3 Groundwater Occurrence and Movement

2.4.3.1 Shallow Groundwater

The shallow groundwater of interest to activities associated with the KMTC is located approximately 15 feet below the surface. This saturated zone produces little water, taking upwards of a week or more for a well to recover to an equilibrium elevation.

Shallow groundwater flow is to the northwest and southwest in the vicinity of the uranium calibration test pit area. Historically, the groundwater flow direction is not expected to have changed since installation of the uranium calibration test pits in the late 1960's. Except for the installation of the facility water supply well described in Section 2.4.2 above in 1991, no other new water withdrawal wells are known to have been installed in the area. Even the installation and utilization of the facility water supply well would not have affected the shallow aquifer system – the shallow water table is hydraulically isolated from the productive water bearing horizon of the Garber-Wellington formation by over 200 feet of predominantly silts, clays and generally fine-grained material.

2.4.3.2 Deep Groundwater

As noted in the regional and site hydrogeology sections, the deeper, useable groundwater is more than 200 feet below the surface. The tightness of the overlying formation, for all practical purposes, minimizes the potential for impacts from surface and near-surface activities.

2.4.4 Groundwater Quality

2.4.4.1 Shallow Groundwater

Shallow groundwater is of good quality although elevated in chloride and sulfates to a degree greater than expected. The shallow zone consists of tight clays and produces small amounts of water (typically much less than 1 gpm).

2.4.4.2 Deep Groundwater

Deep groundwater (greater than 200 feet in depth) is of good quality, suitable for drinking water if desired. This aquifer is used in the regional area for drinking water purposes.

The closest well which could potentially be used for drinking water is on the KMTC property and was installed in 1991 for back-up water use purposes other than drinking. The well is not used for drinking purposes and is primarily used as a supply for fire prevention.

2.4.5 Groundwater Impacts From Licensed Activities

2.4.5.1 Uranium Calibration Test Pits

2.4.5.1.1 Shallow Groundwater

Eight shallow groundwater monitoring wells were installed in the vicinity of the calibration test pits in 1999 to determine if there had been any potential shallow groundwater impact from the uranium calibration test pits. The eight monitor wells were constructed using standard methodology to depths of about 18 feet below grade and were installed on all sides around the test pit area. The locations of the monitor wells, along with a potentiometric surface map from February 2000 are shown on Drawing TECHCNTR_003_REV-0. Completion diagrams for each of the monitor wells are shown on Figures 2.7 through 2.14 and soil boring logs for each of the monitor wells are shown on Figures 2.15 through 2.22. Based upon the results of potentiometric measurements, MW –3, -4, -5, and –6 appear to be upgradient to the 5 test pits which had radioactive materials placed into them (Test Pits 1-5). Monitoring Wells MW -1, -7, and –8 appear to be downgradient wells. The potentiometric surface indicates that Monitoring Well MW-2 would not be influenced by any groundwater contamination that could have originated at the test pits (i.e., it is side-gradient to the test pits).

The monitoring wells were sampled in March 1999, February 2000 and February 2001 with the total uranium concentrations ranging from 7 to 37 pCi/l, including background. These concentrations are substantially below the groundwater DCGL of 226 pCi/l total uranium. Concentrations of Ra-226, Th-230 and Th-232 were all in the range of natural background for all sampling events. Results from the groundwater sampling events are presented in Table 2.4.

Drawing TECHCNTR_005_REV-0 depicts the depth of the monitor wells relative to the depth of the bottom of the calibration test pits. The elevation of the water table is also depicted in the drawing. The eight surrounding monitor wells were adequate in number and depth to monitor the potential for any shallow groundwater impact from the uranium calibration test pits. Four of these monitor wells (MW-1, -5, -7 and –8) were required to be plugged and abandoned as a result of excavation activities in December, 2000.

Table 2.4
KERR-MCGEE TECHNICAL CENTER
Groundwater Monitoring Results

	(pCi/L ± 2 σ)											
	Total U[5,7,8]			Ra-226[4,6]			Th-230			Th-232		
	3/1999	2/2000	2/2001	3/1999	2/2000	2/2001	3/1999	2/2000	2/2001	3/1999	2/2000	2/2001
MW-1[3]	29.3±4.2	26.0±2.0	No Sample[12]	0.37±0.07	0.45±1.08	No Sample[12]	-0.010±0.013	-0.019±0.027	No Sample[12]	0.015±0.013	-0.002±0.009	No Sample[12]
MW-2[1]	37.0±5.3	27.2±2.0	8.2±0.3	0.50±0.09	1.75±1.55	0.73± 0.37	0.022±0.027	-0.011±0.031	0.032±0.037	0.022±0.021	<0.015[10]	0.006±0.024
MW-3[2]	No sample[9]	16.8±1.4	14.6±0.5	No sample[9]	0.73±1.00	0.35± 0.35	No sample[9]	-0.002±0.010	-0.031±0.044	No sample[9]	0.002±0.024	0.00±2.00
MW-4[2]	13.4±1.9	12.8±0.3	7.0±0.2	0.47±0.10	1.06±1.11	0.85± 0.43	0.006±0.011	-0.005±0.033	0.00±2.00	-0.006±0.025	-0.008±0.020	0.00±2.00
MW-5[2]	11.5±1.7	9.8±0.2	No Sample[12]	0.86±0.14	1.04±1.30	No Sample[12]	0.017±0.024	0.003±0.027	No Sample[12]	0.010±0.012	0.024±0.049	No Sample[12]
MW-6[2]	13.4±1.9	11.2±0.3	9.6±0.4	0.77±0.12	2.59±1.87	0.58± 0.46	0.030±0.024	-0.008±0.018	-0.006±0.037	0.004±0.022	-0.008±0.018	0.001±0.048
MW-7[3]	25.4±3.6	35.8±2.7	No Sample[12]	0.38±0.07	2.64±1.89	No Sample[12]	0.015±0.042	-0.002±0.029	No Sample[12]	0.074±0.056	<0.017[11]	No Sample[12]
MW-8[3]	12.9±1.8	12.9±0.3	No Sample[12]	0.37±0.08	0.15±0.72	No Sample[12]	0.021±0.018	0.0005±0.042	No Sample[12]	0.021±0.022	-0.003±0.012	No Sample[12]

Notes:

1. Side-gradient well
2. Upgradient monitoring wells
3. Down gradient monitoring wells
4. Ra-226 Detection Limit ≈ 0.8 pCi/L.
5. Total U Detection Limit ≈ 0.1 pCi/L.
6. Ra-226 measured by Lucas Cell Method.
7. Total U measured by KPA method.
8. Conversion factor for total U: 0.67 pCi = 1μg.
9. Dry
10. Th-228 analysis is 0.031±0.121
11. Th-228 analysis is -0.056±0.093
12. Well inaccessible or damaged due to excavation activities

2.4.5.1.2 Deep Groundwater

No impacts to deeper groundwater are anticipated because of the low permeability of the overlying formation. The shallow water table is hydraulically isolated from the productive water bearing horizon of the Garber-Wellington formation by over 200 feet of predominantly silts, clays and generally fine-grained material.

2.4.6 Local Groundwater Uses

The shallow groundwater near the facility is not used for drinking water purposes and produces little water. Any groundwater uses would be for stock watering and irrigation and expected to be produced from deeper, known water producing horizons. As noted earlier, Kerr-McGee installed a deep water supply well on the KMTC property that potentially could be used for drinking water purposes.

2.4.7 Oklahoma City Municipal Water and Sewer System

2.4.7.1 Drinking Water

The City of Oklahoma City provides municipal drinking water service to the KMTC and surrounding areas. All residential and commercial locations within the City limits are required to hook up to the service.

2.4.7.2 Sanitary Sewer Connection and Discharge Restrictions

The City of Oklahoma City provides municipal sewer and treatment services to the KMTC and all surrounding municipal and residential areas. This wastewater treatment system assures that wastewater receives treatment and discharge within Federal and State mandated water quality requirements. By providing and requiring service connection, the City greatly mitigates against the potential for widespread groundwater contamination from septic and other direct ground discharge activities.

As part of the sewage discharge requirements, businesses are required to obtain a permit and meet certain pollutant discharge restrictions to the system. The KMTC conforms to those requirements and operates under the associated restrictions.

2.4.8 Shallow Groundwater Impacts From Excavation Activities

Upon completion of pit excavation activities in November 2000, water samples were obtained from the open excavation. Some of the early composite water samples from the pit indicated concentrations as high as 670 pCi/l total uranium (based upon qualitative field analysis). Because the "tin-horns" were in good condition and were intact upon removal from the excavation, it was believed that the elevated total uranium water concentrations were due to the fact that the "tin-horns" were not watertight.

The soils located at the west end of the bottom of the excavation were characterized after the "tin-horns" were removed and the total uranium concentrations ranged from background to approximately 43 pCi/g. These impacted soils were removed (down to a depth of approximately 1 meter below the elevation at which the bottom of the "tin-horns" had previously rested) in early January 2001 until all remaining in-situ soils exhibited total uranium concentrations below 12 pCi/g, including background. These in-situ soil total uranium concentrations were then confirmed via final characterization data.

A small groundwater seep in the northwest corner of the excavation was identified with a total uranium concentration of approximately 1,270 pCi/l (based upon qualitative field analysis). Ongoing analysis of water samples obtained from both the open excavation and the seeps in the northwest corner continues to show a decline in total uranium concentrations. The water from the excavation continues to be sampled and the excavation remains open as of the date of submittal of this Decommissioning Plan to the NRC. In the event that the determination is made that the excavation needs to be filled and closed, KMTC will notify the NRC prior to closure of the excavation.

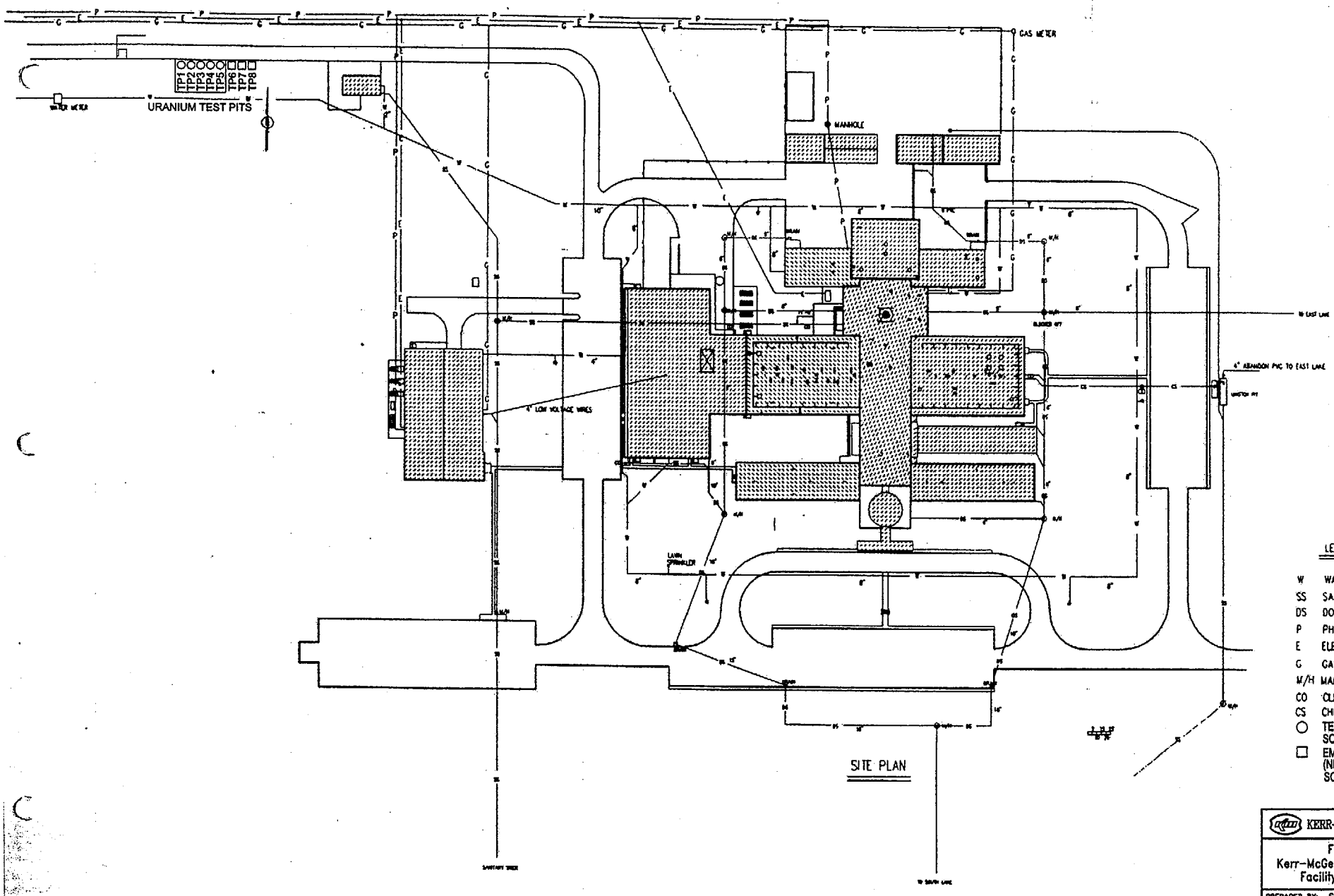

KERR-McGEE CHEMICAL LL

FIGURE 2.1
Kerr-McGee Technical Center
Facility and Grounds

PREPARED BY: SM	DWN BY: BLH
DRAWING NO: KMTC-3	DATE: 1/26/00

Figure 2.2
Kerr-McGee Technical Center

N

KERR-McGEE CHEMICAL LLC.	
FIGURE 2.2 Kerr-McGee Technical Center (photo)	
PREPARED BY: DF	DWN BY: DF
DRAWING NO. KMTC-4	DATE: 2/13/99

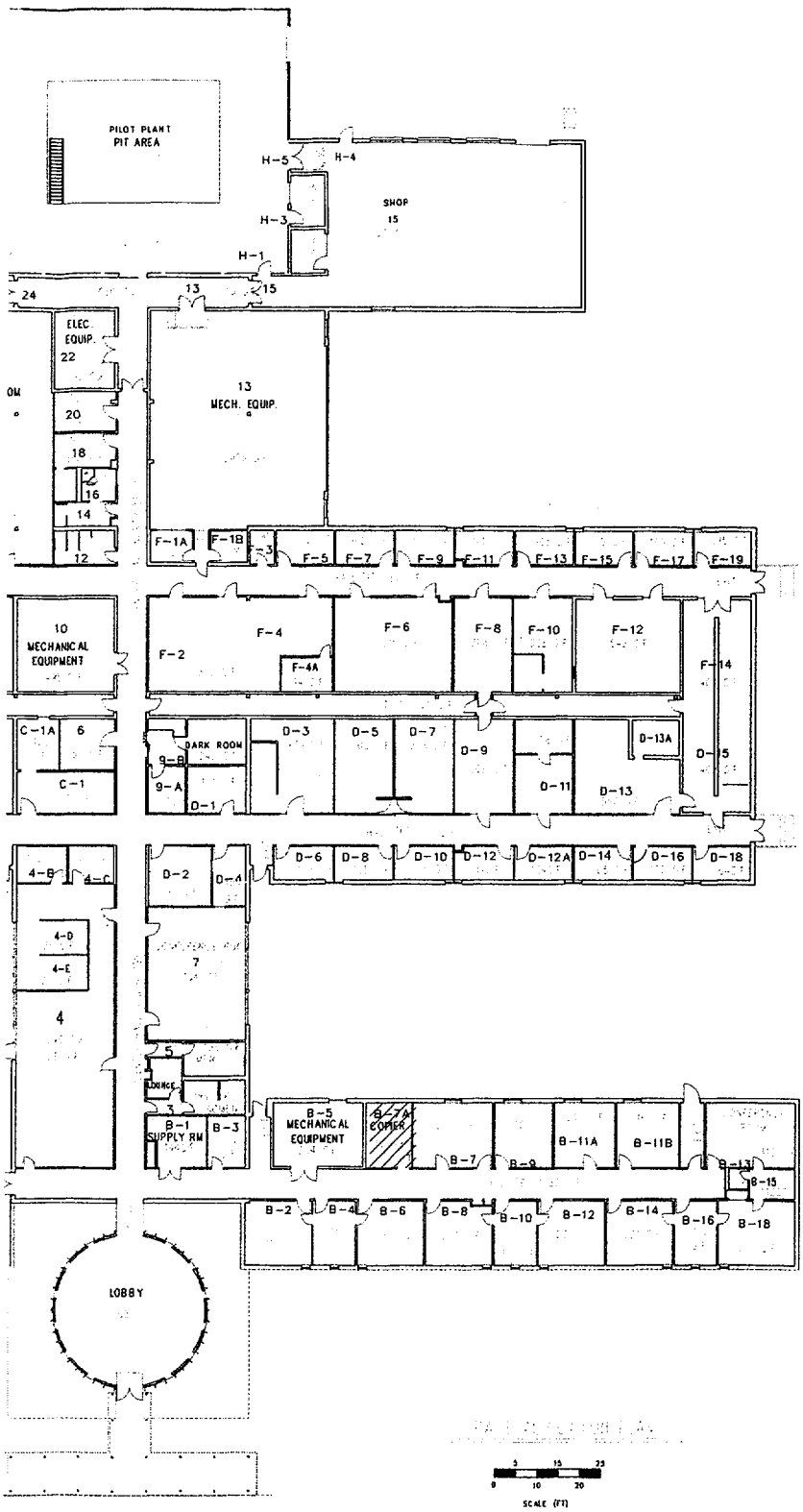

LEGEND

NON LAB AREAS

KERR-McGEE CHEMICAL LLC.

FIGURE 2.3
Kerr-McGee Technical Center
before 1985

PREPARED BY: SM	DWN BY: BLH
DRAWING NO. KMTC-1	DATE: 1/26/00

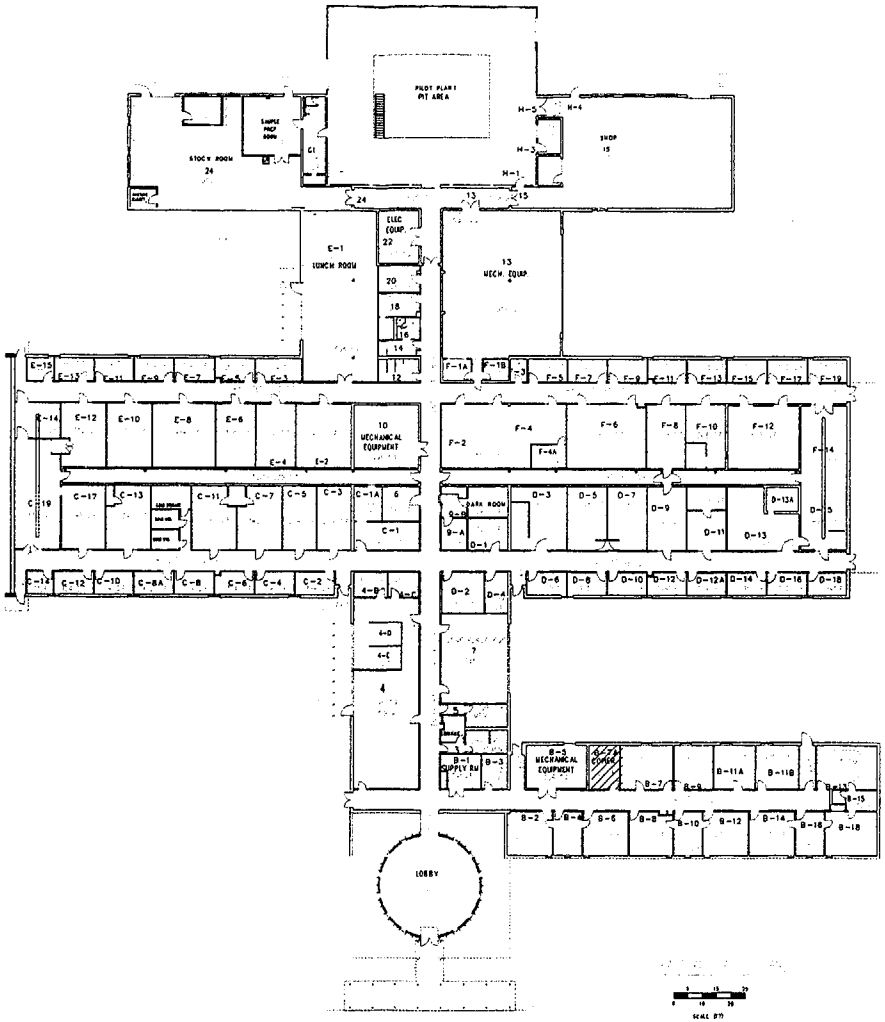

LEGEND

NON LAB AREAS

KERR-McGEE CHEMICAL LLC.

FIGURE 2.3
Kerr-McGee Technical Center
before 1985

PREPARED BY: SM	DWN BY: BLH
DRAWING NO. KMTC-1	DATE: 1/26/00

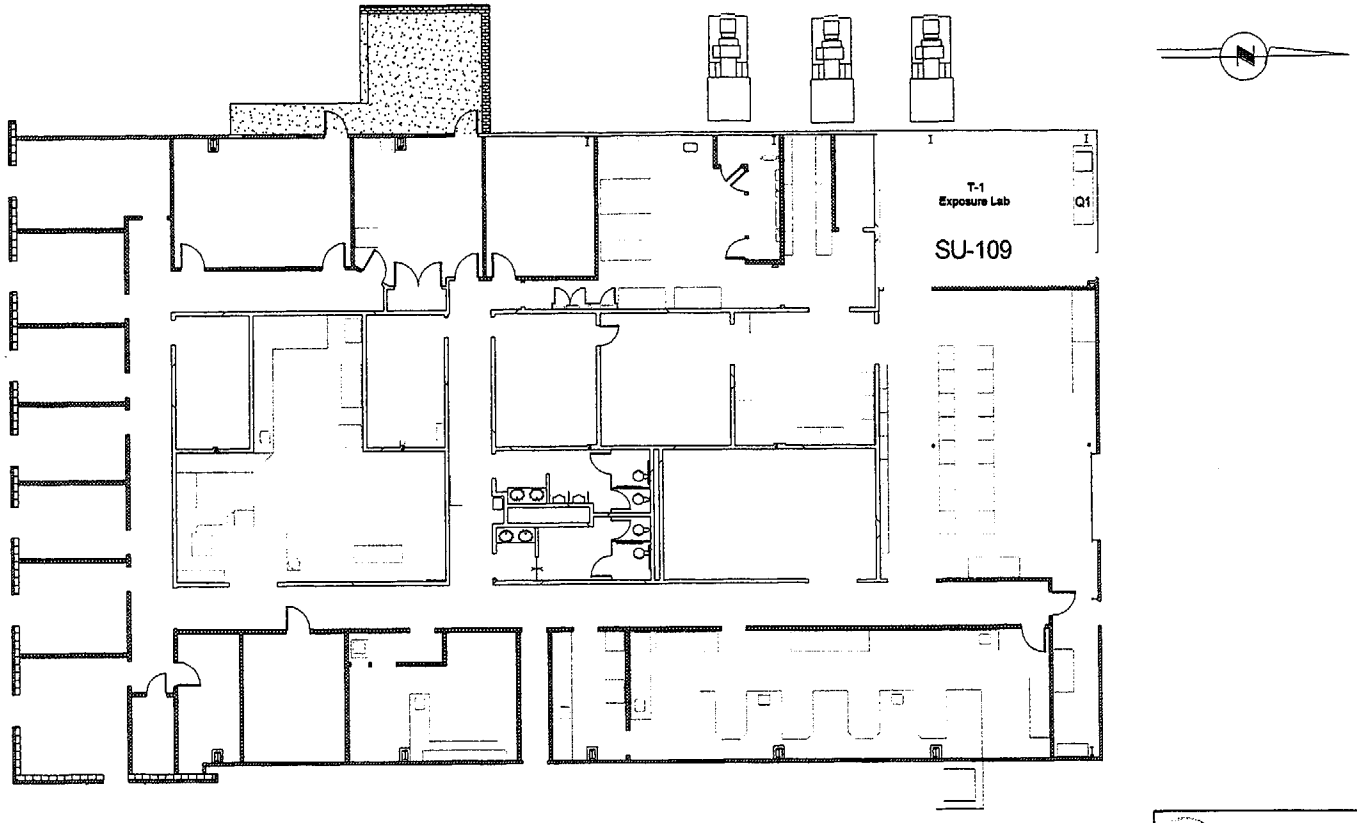

KERR-McGEE CHEMICAL LLC.

FIGURE 2.5
Kerr-McGee Technical Center
TSSL Building

PREPARED BY: BA	DWN BY: BPA
DRAWING NO. KMTC-5	DATE: 4/4/01

Figure 2.6
Uranium Test Pit Construction Details

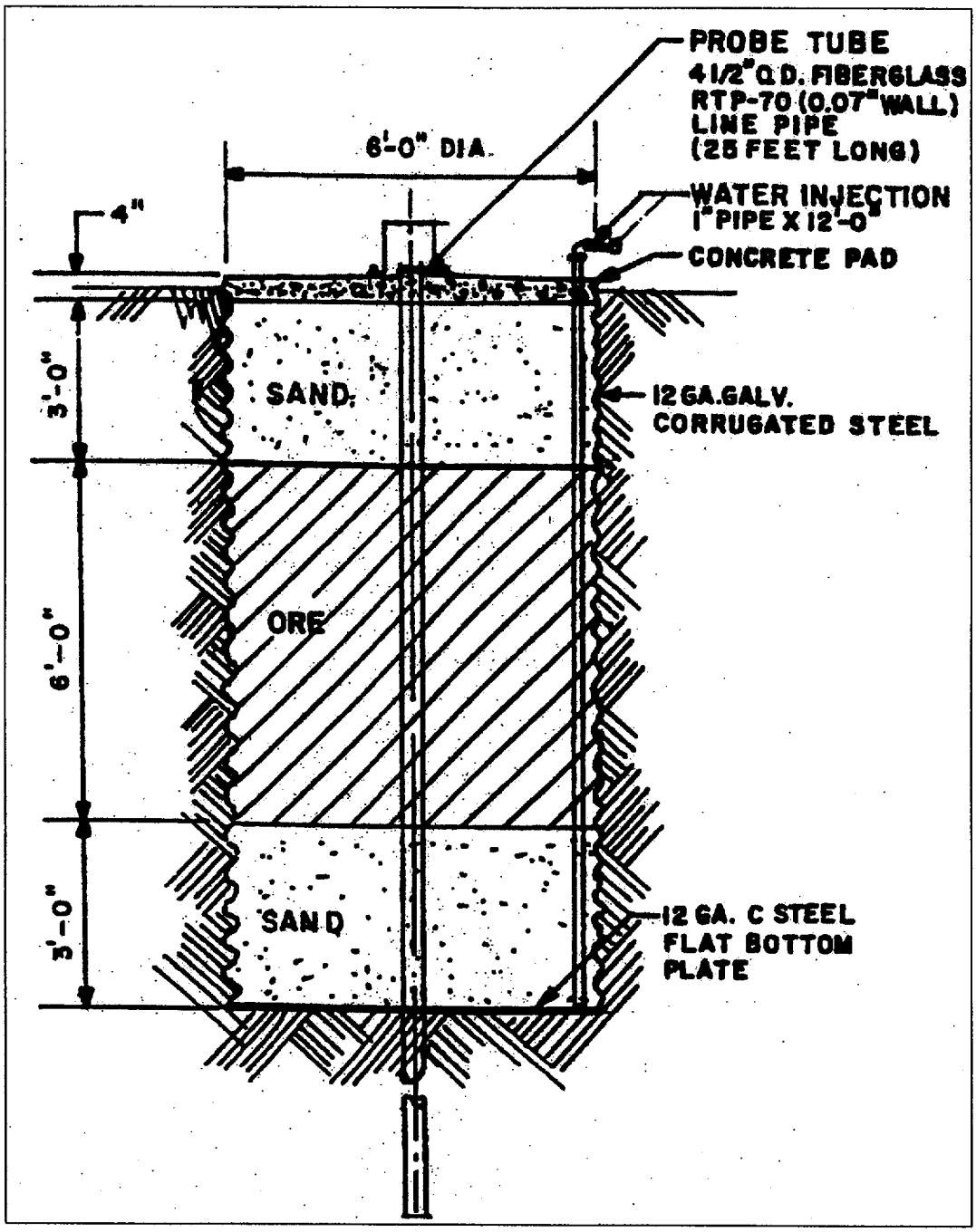

KERR-McGEE CHEMICAL LLC.	
FIGURE 2.6 Uranium Test Pit Construction Details	
PREPARED BY: DF	DWN BY: DF
DRAWING NO. KMTC-5	DATE: 2/13/99

FIGURE 2.7 (UTPMW-1)
KERR-McGEE CORPORATION
HYDROLOGY DEPARTMENT
MONITORING WELL INSTALLATION DIAGRAM

Protective Pipe
Yes ☐ No ☐
Steel ☐ PVC ☐
Surveying Pin ?
Yes ☒ No ☐

Ft.

Concrete

Ft.

Cement/Bentonite Grout Mix
Yes ☐ No ☒
5.5 Gallons Water to 94Lb. Bag Cement & 3-5 Lb. Bentonite Powder

Ft.

Other: Concrete

Bentonite Seal
Pellets ☒ Slurry ☐

2 Ft.

Filter Pack Above Screen

2 Ft.

FILTER PACK MATERIAL
Silica Sand ☐
Washed Sand ☒
Pea Gravel ☐
Other:
Sand Size 8-20

9.4 Ft.

Dense Phase Sampling Cup
Bottom Plug
Yes ☐ No ☐

0.7 Ft.

Overdrilled Material Backfill
Grout ☐ Sand ☐
Caved Material ☒
Other:

5 Ft.

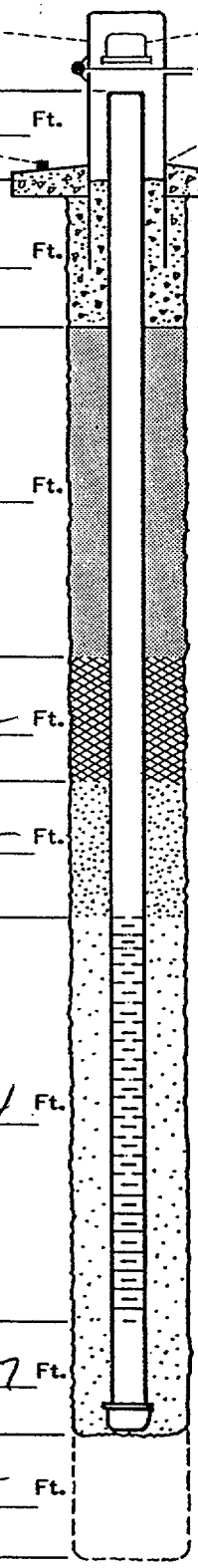

Casing Cap Vent ? Yes ☐ No ☐
Lock ? Yes ☒ No ☐
Weep Hole ? Yes ☐ No ☐
Concrete Pad _____ Ft. x _____ Ft. x _____ Inches

DEPTH BELOW GRADE	DEPTH FROM TOP OF CASING
4	
6	
7.9	
17.3	
18	
23	

DRILLING INFORMATION:

1. Borehole Diameter= 8 Inches.
2. Were Drilling Additives Used ? Yes ☐ No ☒
   Revert ☐ Bentonite ☐ Water ☐
   Solid Auger ☐ Hollow Stem Auger ☒
3. Was Outer Steel Casing Used ? Yes ☐ No ☐
   Depth= _____ to _____ Feet.
4. Borehole Diameter for Outer Casing _____ Inches.

WELL CONSTRUCTION INFORMATION:

1. Type of Casing: PVC ☒ Galvanized ☐ Teflon ☐
   Stainless ☐ Other _____
2. Type of Casing Joints: Screw-Couple ☒ Glue-Couple ☐ Other _____
3. Type of Well Screen: PVC ☒ Galvanized ☐
   Stainless ☐ Teflon ☐ Other _____
4. Diameter of Casing and Well Screen:
   Casing 2 Inches, Screen 2 Inches.
5. Slot Size of Screen: .010
6. Type of Screen Perforation: Factory Slotted ☒
   Hacksaw ☐ Drilled ☐ Other _____
7. Installed Protector Pipe w/Lock: Yes ☐ No ☐

WELL DEVELOPMENT INFORMATION:

1. How was Well Developed ? Bailing ☒ Pumping ☐
   Air Surging (Air or Nitrogen) ☐ Other _____
2. Time Spent on Well Development ?
   _____ / _____ Minutes/Hours
3. Approximate Water Volume Removed ? _____ Gallons
4. Water Clarity Before Development ? Clear ☐
   Turbid ☐ Opaque ☐
5. Water Clarity After Development ? Clear ☐
   Turbid ☐ Opaque ☐
6. Did Water have Odor ? Yes ☐ No ☐
   If Yes, Describe _____
7. Did Water have any Color ? Yes ☐ No ☐
   If Yes, Describe _____

WATER LEVEL INFORMATION:

Water Level Summary (From Top of Casing)

During Drilling _____ Ft. Date _____
Before Development 8 Ft. Date 3/5/99
After Development _____ Ft. Date _____

Bailed ~10 gal 3-10-99

Driller/Firm LAYNE WESTERN Drill Rig Type CME 55 Date Installed 3/5/99
Drill Crew MIKE STOWE/SON STEPLEY Well No. UTPMW-1 Kerr-McGee Hydrologist J. CRAWFORD

FIGURE 2.8 (UTPMW-2)
KERR-McGEE CORPORATION
HYDROLOGY DEPARTMENT
MONITORING WELL INSTALLATION DIAGRAM

Protective Pipe
Yes ☐ No ☐
Steel ☐ PVC ☐
Surveying Pin ?
Yes ☒ No ☐

Casing Cap Vent ? Yes ☐ No ☐
Lock ? Yes ☒ No ☐
Weep Hole ? Yes ☐ No ☐

Concrete Pad _____ Ft. x _____ Ft. x _____ Inches

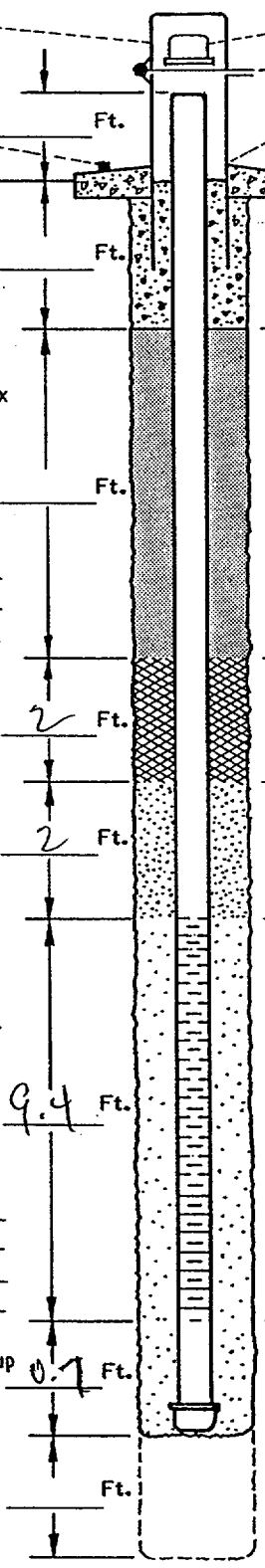

	Ft.	DEPTH BELOW GRADE	DEPTH FROM TOP OF CASING
Surveying Pin			
Concrete			
Cement/Bentonite Grout Mix (Yes ☐ No ☒; 5.5 Gallons Water to 94Lb. Bag Cement & 3-5 Lb. Bentonite Powder; Other: Concrete)		3	
Bentonite Seal (Pellets ☒ Slurry ☐)	2	5	
Filter Pack Above Screen	2	7	
FILTER PACK MATERIAL (Silica Sand ☐ Washed Sand ☒ Pea Gravel ☐; Other: ; Sand Size 8 20)	9.4	16.4	
Dense Phase Sampling Cup (Bottom Plug Yes ☐ No ☐)	0.7	17.1	
Overdrilled Material Backfill (Grout ☐ Sand ☐ Caved Material ☐; Other:)		19.5	

Bailed 10gal. 3-10-99

DRILLING INFORMATION:

1. Borehole Diameter= 8 Inches.
2. Were Drilling Additives Used ? Yes ☐ No ☒
   Revert ☐ Bentonite ☐ Water ☐
   Solid Auger ☐ Hollow Stem Auger ☒
3. Was Outer Steel Casing Used ? Yes ☐ No ☐
   Depth= _____ to _____ Feet.
4. Borehole Diameter for Outer Casing _____ Inches.

WELL CONSTRUCTION INFORMATION:

1. Type of Casing: PVC ☒ Galvanized ☐ Teflon ☐
   Stainless ☐ Other _____
2. Type of Casing Joints: Screw-Couple ☒ Glue-Couple ☐ Other _____
3. Type of Well Screen: PVC ☒ Galvanized ☐
   Stainless ☐ Teflon ☐ Other _____
4. Diameter of Casing and Well Screen:
   Casing 2 Inches, Screen 2 Inches.
5. Slot Size of Screen: .010
6. Type of Screen Perforation: Factory Slotted ☒
   Hacksaw ☐ Drilled ☐ Other _____
7. Installed Protector Pipe w/Lock: Yes ☐ No ☐

WELL DEVELOPMENT INFORMATION:

1. How was Well Developed ? Bailing ☒ Pumping ☐
   Air Surging (Air or Nitrogen) ☐ Other _____
2. Time Spent on Well Development ?
   _____ / _____ Minutes/Hours
3. Approximate Water Volume Removed ? _____ Gallons
4. Water Clarity Before Development ? Clear ☐
   Turbid ☐ Opaque ☐
5. Water Clarity After Development ? Clear ☐
   Turbid ☐ Opaque ☐
6. Did Water have Odor ? Yes ☐ No ☐
   If Yes, Describe _____
7. Did Water have any Color ? Yes ☐ No ☐
   If Yes, Describe _____

WATER LEVEL INFORMATION:

Water Level Summary (From Top of Casing)

During Drilling _____ Ft. Date _____
Before Development 8.35 Ft. Date 3-09-99
After Development _____ Ft. Date _____

Driller/Firm LAYNE WESTERN Drill Rig Type CME 95 Date Installed 3/5/99
Drill Crew MILLESTONE / JIM STERLEY Well No. UTPMW-2 Kerr-McGee Hydrologist J. CRAWFORD

FLUSH MOUNT

FIGURE 2.9 (UTPMW-3)
KERR-McGEE CORPORATION
HYDROLOGY DEPARTMENT
MONITORING WELL INSTALLATION DIAGRAM

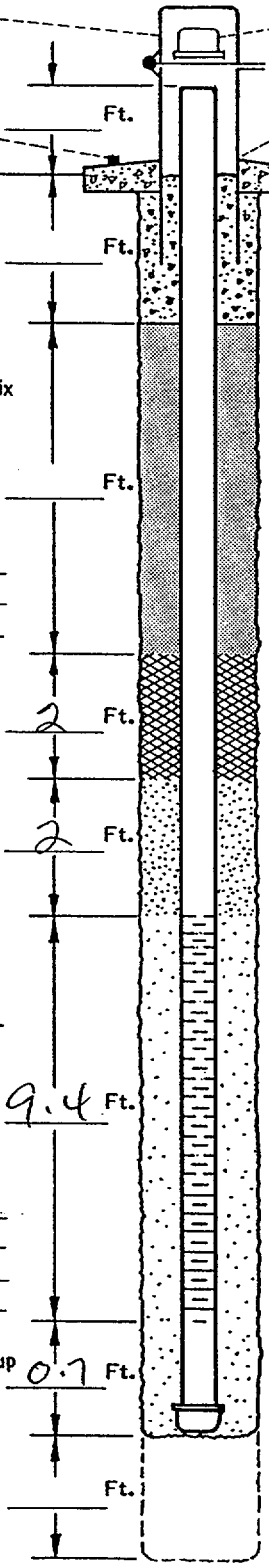

Protective Pipe
Yes ☐ No ☐
Steel ☐ PVC ☐
Surveying Pin ? Yes ☒ No ☐

Ft.

Concrete Ft.

Cement/Bentonite Grout Mix
Yes ☐ No ☒
5.5 Gallons Water to 94Lb. Bag Cement & 3-5 Lb. Bentonite Powder Ft.
Other: Concrete

Bentonite Seal
Pellets ☒ Slurry ☐ 2 Ft.

Filter Pack Above Screen 2 Ft.

FILTER PACK MATERIAL
Silica Sand ☐
Washed Sand ☒ 9.4 Ft.
Pea Gravel ☐
Other:
Sand Size 8-20

Dense Phase Sampling Cup 0.7 Ft.
Bottom Plug
Yes ☐ No ☒

Overdrilled Material Backfill Ft.
Grout ☐ Sand ☐
Caved Material ☒
Other:

Casing Cap Vent ? Yes ☐ No ☐
Lock ? Yes ☒ No ☐
Weep Hole ? Yes ☐ No ☐
Concrete Pad _____ Ft. x _____ Ft. x _____ Inches

DEPTH BELOW GRADE	DEPTH FROM TOP OF CASING
3.9	
5.9	
7.9	
17.3	
18.0	
19.5	

DRILLING INFORMATION:
1. Borehole Diameter= 8 Inches.
2. Were Drilling Additives Used ? Yes ☐ No ☒
   Revert ☐ Bentonite ☐ Water ☐
   Solid Auger ☐ Hollow Stem Auger ☒
3. Was Outer Steel Casing Used ? Yes ☐ No ☐
   Depth= _____ to _____ Feet.
4. Borehole Diameter for Outer Casing _____ Inches.

WELL CONSTRUCTION INFORMATION:
1. Type of Casing: PVC ☒ Galvanized ☐ Teflon ☐
   Stainless ☐ Other _____
2. Type of Casing Joints: Screw-Couple ☒ Glue-Couple ☐ Other _____
3. Type of Well Screen: PVC ☒ Galvanized ☐
   Stainless ☐ Teflon ☐ Other _____
4. Diameter of Casing and Well Screen:
   Casing 2 Inches, Screen 2 Inches.
5. Slot Size of Screen: .010
6. Type of Screen Perforation: Factory Slotted ☒
   Hacksaw ☐ Drilled ☐ Other _____
7. Installed Protector Pipe w/Lock: Yes ☐ No ☐

WELL DEVELOPMENT INFORMATION:
1. How was Well Developed ? Bailing ☐ Pumping ☐
   Air Surging (Air or Nitrogen) ☐ Other _____
2. Time Spent on Well Development ?
   _____/_____ Minutes/Hours
3. Approximate Water Volume Removed ? _____ Gallons
4. Water Clarity Before Development ? Clear ☐
   Turbid ☐ Opaque ☐
5. Water Clarity After Development ? Clear ☐
   Turbid ☐ Opaque ☐
6. Did Water have Odor ? Yes ☐ No ☐
   If Yes, Describe _____
7. Did Water have any Color ? Yes ☐ No ☐
   If Yes, Describe _____

WATER LEVEL INFORMATION:
Water Level Summary (From Top of Casing)

During Drilling _____ Ft. Date _____
Before Development DRY Ft. Date 3/9/99
After Development _____ Ft. Date _____

Driller/Firm LAYNE-WESTERN Drill Rig Type CME 75 Date Installed 3/5/99
Drill Crew MIKE STONE/JON STEPLEY Well No. UTPMW-3 Kerr-McGee Hydrologist J. CRAWFORD

FIGURE 2.10 (UTPMW-4)
KERR-McGEE CORPORATION
HYDROLOGY DEPARTMENT
MONITORING WELL INSTALLATION DIAGRAM

*Redrilled at 3' E of orig. hole on 3-10-99.

Protective Pipe
Yes ☐ No ☐
Steel ☐ PVC ☐
Surveying Pin ?
Yes ☒ No ☐

Casing Cap Vent ? Yes ☐ No ☒
Lock ? Yes ☒ No ☐
Weep Hole ? Yes ☐ No ☒
Concrete Pad _____ Ft. x _____ Ft. x _____ Inches

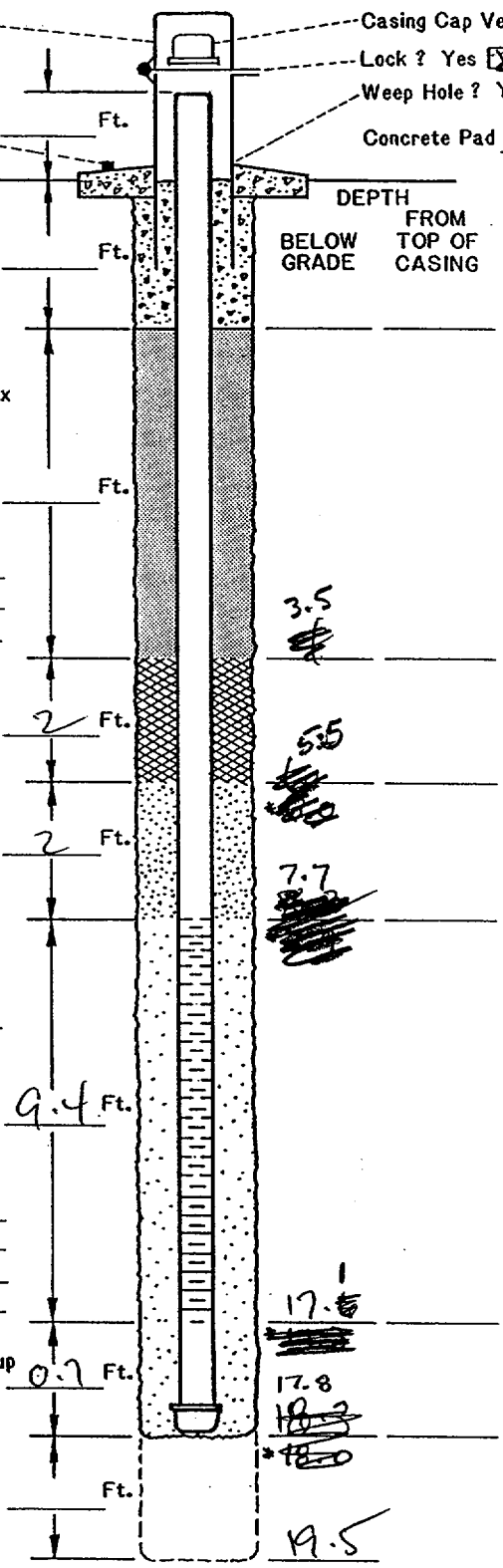

Concrete

Cement/Bentonite Grout Mix
Yes ☐ No ☒
5.5 Gallons Water to 94Lb. Bag Cement & 3-5 Lb. Bentonite Powder
Other: Concrete

Bentonite Seal
Pellets ☒ Slurry ☐

Filter Pack Above Screen

FILTER PACK MATERIAL
Silica Sand ☐
Washed Sand ☒
Pea Gravel ☐
Other: _____
Sand Size 8-20

Dense Phase Sampling Cup
Bottom Plug
Yes ☐ No ☐

Overdrilled Material
Backfill
Grout ☐ Sand ☐
Caved Material ☒
Other: _____

DRILLING INFORMATION:

1. Borehole Diameter= 8 Inches.
2. Were Drilling Additives Used ? Yes ☐ No ☒
   Revert ☐ Bentonite ☐ Water ☐
   Solid Auger ☐ Hollow Stem Auger ☒
3. Was Outer Steel Casing Used ? Yes ☐ No ☐
   Depth= _____ to _____ Feet.
4. Borehole Diameter for Outer Casing _____ Inches.

WELL CONSTRUCTION INFORMATION:

1. Type of Casing: PVC ☒ Galvanized ☐ Teflon ☐
   Stainless ☐ Other _____
2. Type of Casing Joints: Screw-Couple ☒ Glue-Couple ☐ Other _____
3. Type of Well Screen: PVC ☒ Galvanized ☐
   Stainless ☐ Teflon ☐ Other _____
4. Diameter of Casing and Well Screen:
   Casing 2 Inches, Screen 2 Inches.
5. Slot Size of Screen: 0.010
6. Type of Screen Perforation: Factory Slotted ☒
   Hacksaw ☐ Drilled ☐ Other _____
7. Installed Protector Pipe w/Lock: Yes ☐ No ☐

WELL DEVELOPMENT INFORMATION:

1. How was Well Developed ? Bailing ☒ Pumping ☐
   Air Surging (Air or Nitrogen) ☐ Other _____
2. Time Spent on Well Development ?
   _____ / _____ Minutes/Hours
3. Approximate Water Volume Removed ? _____ Gallons
4. Water Clarity Before Development ? Clear ☐
   Turbid ☐ Opaque ☐
5. Water Clarity After Development ? Clear ☐
   Turbid ☐ Opaque ☐
6. Did Water have Odor ? Yes ☐ No ☐
   If Yes, Describe _____
7. Did Water have any Color ? Yes ☐ No ☐
   If Yes, Describe _____

WATER LEVEL INFORMATION:

Water Level Summary (From Top of Casing)

During Drilling _____ Ft. Date _____
Before Development _____ Ft. Date _____
After Development _____ Ft. Date _____

Driller/Firm LAYNE-WESTERN Drill Rig Type CME 95 Date Installed 3/5/99
Drill Crew MIKE STONE / JON STEPLEY Well No. UTPMW-4 Kerr-McGee Hydrologist J. CRAWFORD

FIGURE 2.11 (UTPMW-5)
KERR-McGEE CORPORATION
HYDROLOGY DEPARTMENT
MONITORING WELL INSTALLATION DIAGRAM

Protective Pipe
Yes ☐ No ☐
Steel ☐ PVC ☐
Surveying Pin ?
Yes ☒ No ☐

Casing Cap Vent ? Yes ☐ No ☐
Lock ? Yes ☑ No ☐
Weep Hole ? Yes ☐ No ☑
Concrete Pad _____ Ft. x _____ Ft. x _____ Inches

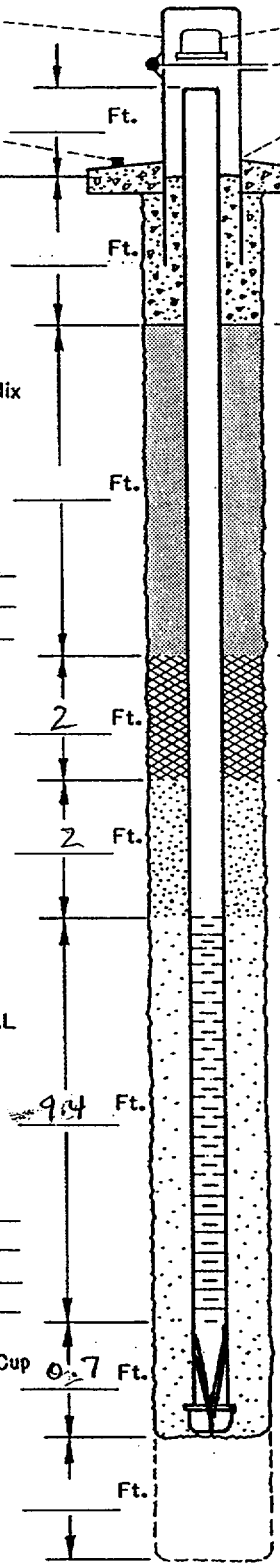

	Ft.	DEPTH BELOW GRADE	DEPTH FROM TOP OF CASING
Concrete			
	Ft.		
Cement/Bentonite Grout Mix Yes ☐ No ☒ 5.5 Gallons Water to 94Lb. Bag Cement & 3-5 Lb. Bentonite Powder Other: concrete	Ft.	4.5	
Bentonite Seal Pellets ☒ Slurry ☐	2 Ft.	6.5	
Filter Pack Above Screen	2 Ft.	8.5	
FILTER PACK MATERIAL Silica Sand ☐ Washed Sand ☒ Pea Gravel ☐ Other: Sand Size 8/20	9.4 Ft.	18.9	
Dense Phase Sampling Cup Bottom Plug Yes ☐ No ☒	0.7 Ft.	18.6	
Overdrilled Material Backfill Grout ☐ Sand ☑ Caved Material ☒ Other:	Ft.		

DRILLING INFORMATION:

1. Borehole Diameter= 8 Inches.
2. Were Drilling Additives Used ? Yes ☐ No ☒
   Revert ☐ Bentonite ☐ Water ☐
   Solid Auger ☐ Hollow Stem Auger ☒
3. Was Outer Steel Casing Used ? Yes ☐ No ☒
   Depth= _____ to _____ Feet.
4. Borehole Diameter for Outer Casing _____ Inches.

WELL CONSTRUCTION INFORMATION:

1. Type of Casing: PVC ☒ Galvanized ☐ Teflon ☐
   Stainless ☐ Other _____
2. Type of Casing Joints: Screw-Couple ☒ Glue-Couple ☐ Other _____
3. Type of Well Screen: PVC ☒ Galvanized ☐
   Stainless ☐ Teflon ☐ Other _____
4. Diameter of Casing and Well Screen:
   Casing 2 Inches, Screen 2 Inches.
5. Slot Size of Screen: .010
6. Type of Screen Perforation: Factory Slotted ☒
   Hacksaw ☐ Drilled ☐ Other _____
7. Installed Protector Pipe w/Lock: Yes ☒ No ☐

WELL DEVELOPMENT INFORMATION:

1. How was Well Developed ? Bailing ☒ Pumping ☐
   Air Surging (Air or Nitrogen) ☐ Other _____
2. Time Spent on Well Development ?
   _____ / _____ Minutes/Hours
3. Approximate Water Volume Removed ? _____ Gallons
4. Water Clarity Before Development ? Clear ☐
   Turbid ☐ Opaque ☐
5. Water Clarity After Development ? Clear ☐
   Turbid ☐ Opaque ☐
6. Did Water have Odor ? Yes ☐ No ☐
   If Yes, Describe _____
7. Did Water have any Color ? Yes ☐ No ☐
   If Yes , Describe _____

WATER LEVEL INFORMATION:

Water Level Summary (From Top of Casing)

3 hrs after ~~During~~ Drilling 10.6 Ft. Date 3-9-99
Before Development _____ Ft. Date _____
After Development _____ Ft. Date _____

Driller/Firm LAYNE Drill Rig Type CME 95 Date Installed 3-09-99
Drill Crew MIKE STONE / JON STEPLEY Well No. UTPMW-5 Kerr-McGee Hydrologist R³ (ROE)

FIGURE 2.12 (UTPMW-6)
KERR-McGEE CORPORATION
HYDROLOGY DEPARTMENT
MONITORING WELL INSTALLATION DIAGRAM

Protective Pipe
Yes ☐ No ☐
Steel ☐ PVC ☐
Surveying Pin ?
Yes ☒ No ☐

Casing Cap Vent ? Yes ☐ No ☐
Lock ? Yes ☑ No ☐
Weep Hole ? Yes ☐ No ☑

Concrete Pad _____ Ft. x _____ Ft. x _____ Inches

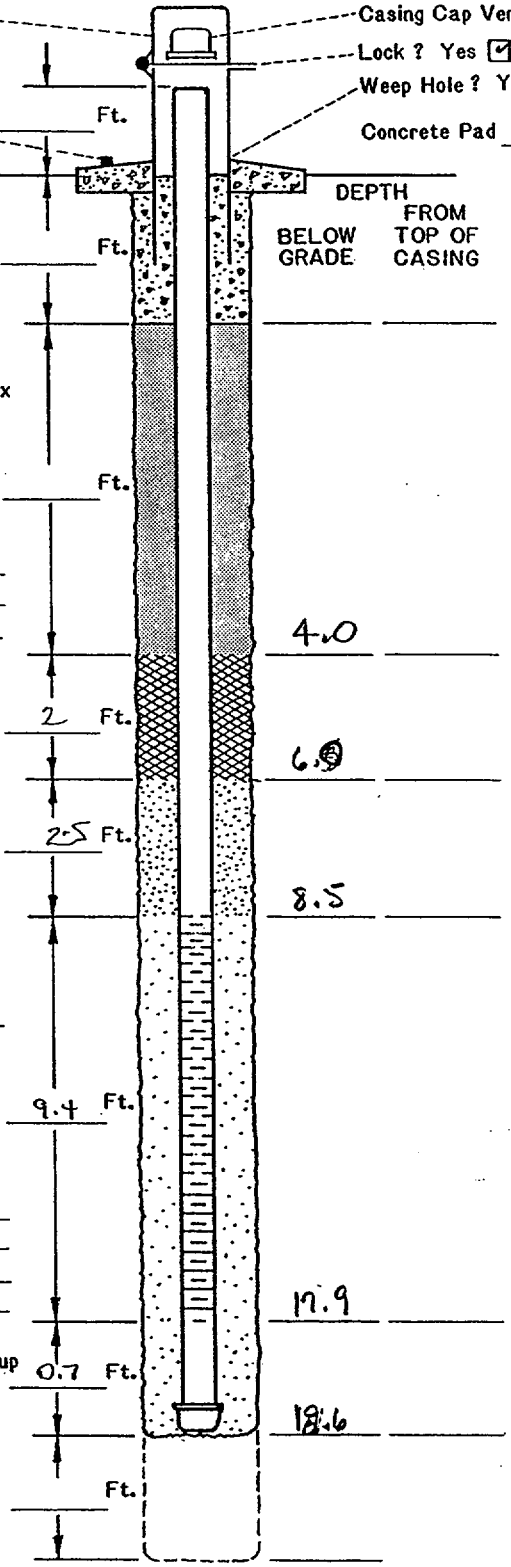

Concrete

Cement/Bentonite Grout Mix
Yes ☐ No ☒
5.5 Gallons Water to 94Lb. Bag Cement & 3-5 Lb. Bentonite Powder
Other: Concrete

Bentonite Seal
Pellets ☐ Slurry ☐

Filter Pack Above Screen

FILTER PACK MATERIAL
Silica Sand ☐
Washed Sand ☐
Pea Gravel ☐
Other: _____
Sand Size _____

Dense Phase Sampling Cup
Bottom Plug
Yes ☐ No ☐

Overdrilled Material Backfill
Grout ☐ Sand ☐
Caved Material ☐
Other: _____

DRILLING INFORMATION:

1. Borehole Diameter= 8 Inches.
2. Were Drilling Additives Used ? Yes ☐ No ☒
   Revert ☐ Bentonite ☐ Water ☐
   Solid Auger ☒ Hollow Stem Auger ☐
3. Was Outer Steel Casing Used ? Yes ☐ No ☒
   Depth= _____ to _____ Feet.
4. Borehole Diameter for Outer Casing _____ Inches.

WELL CONSTRUCTION INFORMATION:

1. Type of Casing: PVC ☒ Galvanized ☐ Teflon ☐
   Stainless ☐ Other _____
2. Type of Casing Joints: Screw-Couple ☒ Glue-Couple ☐ Other _____
3. Type of Well Screen: PVC ☒ Galvanized ☐
   Stainless ☐ Teflon ☐ Other _____
4. Diameter of Casing and Well Screen:
   Casing 2 Inches, Screen 2 Inches.
5. Slot Size of Screen: 0.010
6. Type of Screen Perforation: Factory Slotted ☑
   Hacksaw ☐ Drilled ☐ Other _____
7. Installed Protector Pipe w/Lock: Yes ☒ No ☐

WELL DEVELOPMENT INFORMATION:

1. How was Well Developed ? Bailing ☒ Pumping ☐
   Air Surging (Air or Nitrogen) ☐ Other _____
2. Time Spent on Well Development ?
   _____ / _____ Minutes/Hours
3. Approximate Water Volume Removed ? _____ Gallons
4. Water Clarity Before Development ? Clear ☐
   Turbid ☐ Opaque ☐
5. Water Clarity After Development ? Clear ☐
   Turbid ☐ Opaque ☐
6. Did Water have Odor ? Yes ☐ No ☐
   If Yes, Describe _____
7. Did Water have any Color ? Yes ☐ No ☐
   If Yes , Describe _____

WATER LEVEL INFORMATION:

Water Level Summary (From Top of Casing)

During Drilling _____ Ft. Date _____
Before Development 11.8 Ft. Date 3-10-99
After Development _____ Ft. Date _____

Driller/Firm LAYNE
Drill Rig Type CME 95
Date Installed 3-9-99
Drill Crew Mike Stone / Jon Stapley
Well No. UTPMW-6
Kerr-McGee Hydrologist R³ (Roe)

FIGURE 2.13 (UTPMW-7)
KERR-McGEE CORPORATION
HYDROLOGY DEPARTMENT
MONITORING WELL INSTALLATION DIAGRAM

Protective Pipe
Yes ☐ No ☐
Steel ☐ PVC ☐
Surveying Pin ?
Yes ☒ No ☐

Casing Cap Vent ? Yes ☐ No ☐
Lock ? Yes ☒ No ☐
Weep Hole ? Yes ☐ No ☐
Concrete Pad _____ Ft. x _____ Ft. x _____ Inches

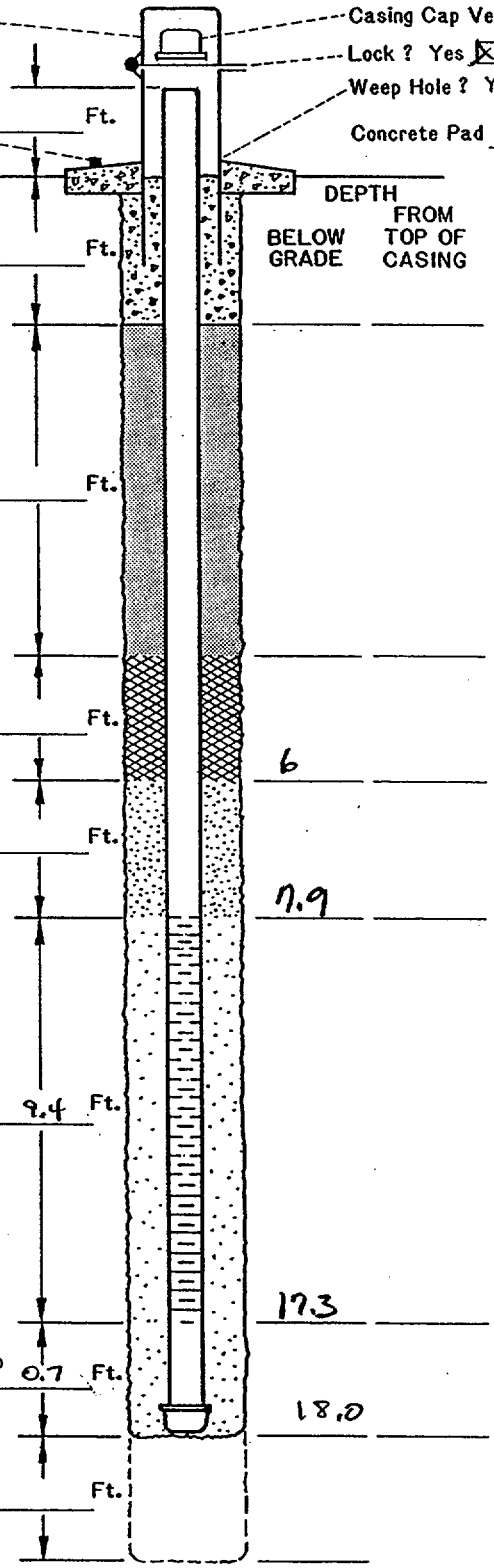

	Ft.	DEPTH BELOW GRADE	DEPTH FROM TOP OF CASING
Concrete			
Cement/Bentonite Grout Mix Yes ☐ No ☒ 5.5 Gallons Water to 94Lb. Bag Cement & 3-5 Lb. Bentonite Powder Other: concrete			
Bentonite Seal Pellets ☒ Slurry ☐		6	
Filter Pack Above Screen		7.9	
FILTER PACK MATERIAL Silica Sand ☐ Washed Sand ☒ Pea Gravel ☐ Other: Sand Size coarse	9.4	17.3	
Dense Phase Sampling Cup Bottom Plug Yes ☐ No ☒	0.7	18.0	
Overdrilled Material Backfill Grout ☐ Sand ☐ Caved Material ☒ Other:			

DRILLING INFORMATION:

1. Borehole Diameter= 8 Inches.
2. Were Drilling Additives Used ? Yes ☐ No ☒
   Revert ☐ Bentonite ☐ Water ☐
   Solid Auger ☐ Hollow Stem Auger ☒
3. Was Outer Steel Casing Used ? Yes ☐ No ☒
   Depth= _____ to _____ Feet.
4. Borehole Diameter for Outer Casing _____ Inches.

WELL CONSTRUCTION INFORMATION:

1. Type of Casing: PVC ☒ Galvanized ☐ Teflon ☐
   Stainless ☐ Other _____
2. Type of Casing Joints: Screw-Couple ☒ Glue-Couple ☐ Other _____
3. Type of Well Screen: PVC ☒ Galvanized ☐
   Stainless ☐ Teflon ☐ Other _____
4. Diameter of Casing and Well Screen:
   Casing 2 Inches, Screen 2 Inches.
5. Slot Size of Screen: 0.010
6. Type of Screen Perforation: Factory Slotted ☒
   Hacksaw ☐ Drilled ☐ Other _____
7. Installed Protector Pipe w/Lock: Yes ☒ No ☐

WELL DEVELOPMENT INFORMATION:

1. How was Well Developed ? Bailing ☒ Pumping ☐
   Air Surging (Air or Nitrogen) ☐ Other _____
2. Time Spent on Well Development ?
   _____ / _____ Minutes/Hours
3. Approximate Water Volume Removed ? _____ Gallons
4. Water Clarity Before Development ? Clear ☐
   Turbid ☐ Opaque ☐
5. Water Clarity After Development ? Clear ☐
   Turbid ☐ Opaque ☐
6. Did Water have Odor ? Yes ☐ No ☐
   If Yes, Describe _____
7. Did Water have any Color ? Yes ☐ No ☐
   If Yes , Describe _____

WATER LEVEL INFORMATION:

Water Level Summary (From Top of Casing)

During Drilling _____ Ft., Date _____
Before Development 11.7 Ft. Date 3-10-99
After Development _____ Ft. Date _____

Driller/Firm LAYNE WESTERN
Drill Rig Type CME 95
Date Installed 3/9/99
Drill Crew M. STONE / J. STEPLEY
Well No. UTPMW-7
Kerr-McGee Hydrologist R3 (Roe)

FIGURE 2.14 (UTPMW-8)
KERR-McGEE CORPORATION
HYDROLOGY DEPARTMENT
MONITORING WELL INSTALLATION DIAGRAM

Protective Pipe
Yes ☐ No ☐
Steel ☐ PVC ☐
Surveying Pin ?
Yes ☒ No ☐

Casing Cap Vent ? Yes ☐ No ☐
Lock ? Yes ☒ No ☐
Weep Hole ? Yes ☐ No ☐
Concrete Pad _____ Ft. x _____ Ft. x _____ Inches

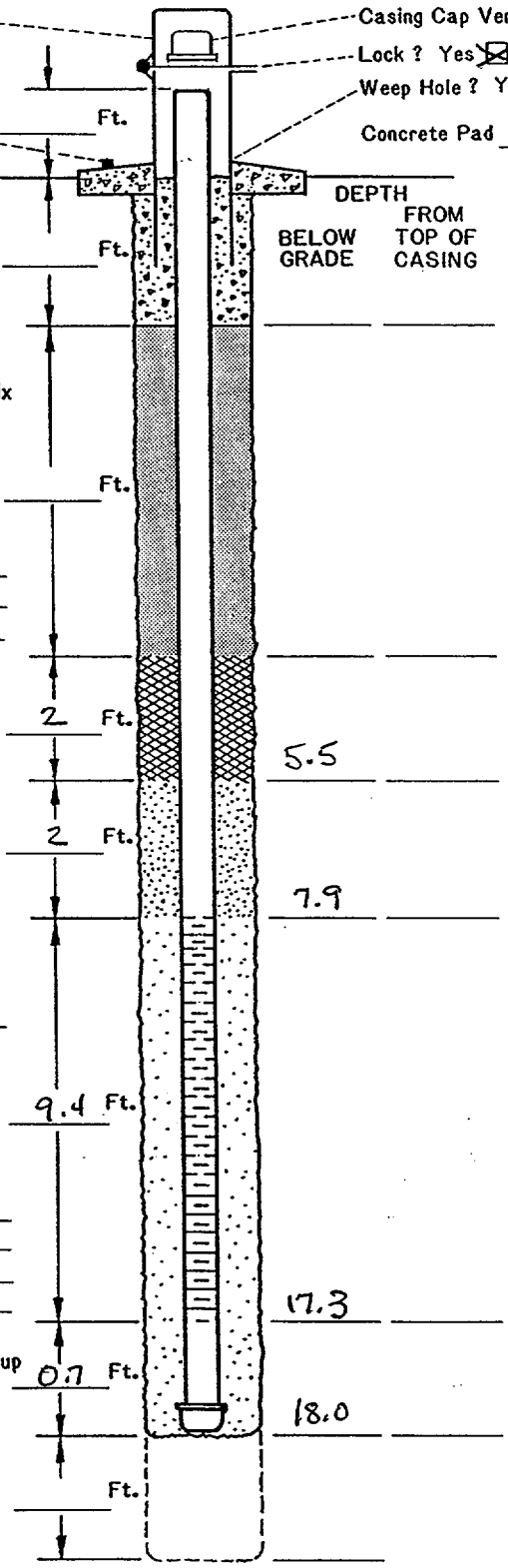

Concrete

Cement/Bentonite Grout Mix
Yes ☐ No ☒
5.5 Gallons Water to 94Lb. Bag Cement & 3-5 Lb. Bentonite Powder
Other: Concrete

Bentonite Seal
Pellets ☐ Slurry ☐

Filter Pack Above Screen

FILTER PACK MATERIAL
Silica Sand ☐
Washed Sand ☐
Pea Gravel ☐
Other: _____
Sand Size _____

Dense Phase Sampling Cup
Bottom Plug
Yes ☐ No ☐

Overdrilled Material Backfill
Grout ☐ Sand ☐
Caved Material ☐
Other: _____

DRILLING INFORMATION:

1. Borehole Diameter= 8 Inches.
2. Were Drilling Additives Used ? Yes ☐ No ☒
   Revert ☐ Bentonite ☐ Water ☐
   Solid Auger ☒ Hollow Stem Auger ☐
3. Was Outer Steel Casing Used ? Yes ☐ No ☒
   Depth= _____ to _____ Feet.
4. Borehole Diameter for Outer Casing _____ Inches.

WELL CONSTRUCTION INFORMATION:

1. Type of Casing: PVC ☒ Galvanized ☐ Teflon ☐
   Stainless ☐ Other _____
2. Type of Casing Joints: Screw-Couple ☒ Glue-Couple ☐ Other _____
3. Type of Well Screen: PVC ☒ Galvanized ☐
   Stainless ☐ Teflon ☐ Other _____
4. Diameter of Casing and Well Screen:
   Casing 2 Inches, Screen 2 Inches.
5. Slot Size of Screen: 0.010
6. Type of Screen Perforation: Factory Slotted ☒
   Hacksaw ☐ Drilled ☐ Other _____
7. Installed Protector Pipe w/Lock: Yes ☒ No ☐

WELL DEVELOPMENT INFORMATION:

1. How was Well Developed ? Bailing ☒ Pumping ☐
   Air Surging (Air or Nitrogen) ☐ Other _____
2. Time Spent on Well Development ?
   _____ / _____ Minutes/Hours
3. Approximate Water Volume Removed ? _____ Gallons
4. Water Clarity Before Development ? Clear ☐
   Turbid ☐ Opaque ☐
5. Water Clarity After Development ? Clear ☐
   Turbid ☐ Opaque ☐
6. Did Water have Odor ? Yes ☐ No ☐
   If Yes, Describe _____
7. Did Water have any Color ? Yes ☐ No ☐
   If Yes, Describe _____

WATER LEVEL INFORMATION:

Water Level Summary (From Top of Casing)

During Drilling _____ Ft. Date _____
Before Development _____ Ft. Date _____
After Development _____ Ft. Date _____

Driller/Firm LAYNE WESTERN Drill Rig Type CME 95 Date Installed 3/10/95
Drill Crew MIKE STONE / JON STEPLEY Well No. UTPMW-8 Kerr-McGee Hydrologist R. Roe

FIGURE 2.15 (UTPMW-1)
SOIL BORING LOG KM—5655-A

KERR-McGEE CORPORATION Hydrology Dept. Engineering Services	KM SUBSIDIARY KMC LLC	LOCATION TECH CENTER	BORING NUMBER UTPMW-1

DEPTH IN FEET	LITHOLOGIC DESCRIPTION	GRAPHIC LOG	UNIFIED SOIL FIELD CLASS.	BLOWS PER FOOT	PID (ppm)	SOIL SAMPLE NO.	TYPE	DEPTH	REC.	REMARKS OR FIELD OBSERVATIONS
	FILL SOIL - SDY W/ GRAVEL									CME 95
	SILTY CLAY - BRN BCMG RD BRN									8" HOLE
	MOIST SFT BCMG FIRM/DRY W/								3.6'	DRILL V. SLOW
	DEPTH LOW PLAST SLI BLKY							4.5		TO 5' - WATER
5	HOMOGEN									LINE NEARBY
	SILT - FRIABLE DRY									
	SILTY CLAY - RD BRN DRY								5'	
	BCMG ORANGE RED									
	LAMINATED TO FISSURED							9.5		
10	SHALEY IN PART V. HARD									
	TR GRVL									
	SILTY CLAY to SILT - RD BRN									
	TO ORG BRN SLI MOIST								4.8'	
	SILT - CLAYEY BRICK RED							14.5		
15	TR MAROON HD DRY									
	to TR SLI MOIST									
									3.8'	
	SILT to SILTY CLAY AAB							19.5		FROM 21 - 23'
20										AUGER W/ NO
									0	SAMPLER - TOO
										HARD
								23		
	TD 23 FT									

EXPLANATION

- ▼ Water Table (24 Hour)
- ▽ Water Table (Time of Boring)
- PID Photoionization Detection (ppm)
- NO. Identifies Sample by Number
- TYPE Sample Collection Method

SPLIT-BARREL · AUGER · ROCK CORE · THIN-WALLED TUBE · CONTINUOUS SAMPLER · NO RECOVERY

DEPTH Depth Top and Bottom of Sample
REC. Actual Length of Recovered Sample in Feet

GRAPHIC LOG LEGEND

CLAY · SILT · SAND · GRAVEL · SILTY CLAY · CLAYEY SILT · DEBRIS FILL · HIGHLY ORGANIC (PEAT) · SANDY CLAY · CLAYEY SAND

DATE DRILLED	PAGE
3/4/99	1 of 1

DRILLING METHOD: HSA
DRILLED BY: LAYNE WESTERN
LOGGED BY: J. CRAWFORD
EXISTING GRADE ELEVATION (FT. AMSL):
LOCATION OR GRID COORDINATES:

FIGURE 2.16 (UTPMW-2)

SOIL BORING LOG KM—5655-A

KERR-McGEE CORPORATION Hydrology Dept. Engineering Services	KM SUBSIDIARY KMC-LLC	LOCATION TECH CENTER	BORING NUMBER UTPMW-2

DEPTH IN FEET	LITHOLOGIC DESCRIPTION	GRAPHIC LOG	UNIFIED SOIL FIELD CLASS.	BLOWS PER FOOT	PID (ppm)	SOIL SAMPLE NO.	TYPE	DEPTH	REC.	REMARKS OR FIELD OBSERVATIONS
	SILTY CLAY-BRN BCMG RED BRN SOFT MOIST							4.5	4'	
5										
	SILTY CLAY BCMG ORANGE RED SLI MOIST SOFT							9.5	5'	
10										
	BCMG CLAYEY SILT DRY							14.5	4.5'	
15										
	CLAYEY SILT MOIST SOFT							19.5	4.8'	
20										
	TD 19.5'									

EXPLANATION

- ▼ Water Table (24 Hour)
- ▽ Water Table (Time of Boring)
- PID Photoionization Detection (ppm)
- NO. Identifies Sample by Number
- TYPE Sample Collection Method

SPLIT-BARREL | AUGER | ROCK CORE | THIN-WALLED TUBE | CONTINUOUS SAMPLER | NO RECOVERY

DEPTH. Depth Top and Bottom of Sample
REC. Actual Length of Recovered Sample in Feet

GRAPHIC LOG LEGEND

CLAY | DEBRIS FILL | SILT | HIGHLY ORGANIC (PEAT) | SAND | SANDY CLAY | GRAVEL | CLAYEY SAND | SILTY CLAY | CLAYEY SILT

DATE DRILLED	3/5/99
PAGE	1 of 1
DRILLING METHOD	HSA
DRILLED BY	LAYNE WESTERN
LOGGED BY	J. CRAWFORD
EXISTING GRADE ELEVATION (FT. AMSL)	
LOCATION OR GRID COORDINATES	

FIGURE 2.17 (UTPMW-3)
SOIL BORING LOG KM—5655-A

KERR-McGEE CORPORATION Hydrology Dept. Engineering Services	KM SUBSIDIARY KM C-LLC	LOCATION TECH CENTER	BORING NUMBER UTPMW-3

DEPTH IN FEET	LITHOLOGIC DESCRIPTION	GRAPHIC LOG	UNIFIED SOIL FIELD CLASS.	BLOWS PER FOOT	PID (ppm)	SOIL SAMPLE NO.	TYPE	DEPTH	REC.	REMARKS OR FIELD OBSERVATIONS
	SILTY CLAY-BRN TO DK BRN MOIST FRM									
	BCMG RD BRN FIRM V. SLI PLASTIC							4.5	5'	
5										
	INCREASE SILT W/ DEPTH NON PLASTIC DRY									
	SILT-BRIK RED FIRM TO HARD FISSURED CRUMBLY BLUE/GRAY REDUC ZONES SDY IP							9.5	3.8'	
10										
	SILTY CLAY BRIK RED TO ORANGE RD DRY V. HRD FEW V. FINE FRACS NOTED							14.5	4.5'	WET 15-15.5'
15										
	SILTY CLAY - RD ORANGE							19	4'	
20	VERY. RD NOTE FRACS + SLICKENSIDES FW REDUCTION ZONES									
	Total DEPTH 19'									

EXPLANATION

- ▼ Water Table (24 Hour)
- ▽ Water Table (Time of Boring)
- PID Photoionization Detection (ppm)
- NO. Identifies Sample by Number
- TYPE Sample Collection Method

SPLIT-BARREL · AUGER · ROCK CORE · THIN-WALLED TUBE · CONTINUOUS SAMPLER · NO RECOVERY

DEPTH Depth Top and Bottom of Sample
REC. Actual Length of Recovered Sample in Feet

GRAPHIC LOG LEGEND

CLAY · SILT · SAND · GRAVEL · SILTY CLAY · CLAYEY SILT · DEBRIS FILL · HIGHLY ORGANIC (PEAT) · SANDY CLAY · CLAYEY SAND

DATE DRILLED	PAGE
3/5/99	1 of 1

DRILLING METHOD: HSA
DRILLED BY: LAYNE WESTERN
LOGGED BY: J. CRAWFORD
EXISTING GRADE ELEVATION (FT. AMSL)
LOCATION OR GRID COORDINATES

FIGURE 2.18 (UTPMW-4)
SOIL BORING LOG KM—5655-A

KERR-McGEE CORPORATION Hydrology Dept. Engineering Services	KM SUBSIDIARY KMC - LLC	LOCATION TECH CENTER	BORING NUMBER UTPMW-4

DEPTH IN FEET	LITHOLOGIC DESCRIPTION	GRAPHIC LOG	UNIFIED SOIL FIELD CLASS.	BLOWS PER FOOT	PID (ppm)	SOIL SAMPLE NO.	TYPE	DEPTH	REC.	REMARKS OR FIELD OBSERVATIONS
	SILTY CLAY - BRN SOFT MOIST									
								4.5	5	
5	BCMG RD BRN SILTY CLAY MOIST - DRY W/ DEPTH									
								9.5	4	
10	SILTY CLAY RD BRN CRUMBLY									MOIST 13-15'
								14.5	4.5	
15	SILTY CLAY RD BRN SHALEY IP									
								19.5	4.6	
20	TD 19.5'									

EXPLANATION

- ▼ Water Table (24 Hour)
- ▽ Water Table (Time of Boring)
- PID Photoionization Detection (ppm)
- NO. Identifies Sample by Number
- TYPE Sample Collection Method

SPLIT-BARREL | AUGER | ROCK CORE | THIN-WALLED TUBE | CONTINUOUS SAMPLER | NO RECOVERY

DEPTH Depth Top and Bottom of Sample
REC. Actual Length of Recovered Sample in Feet

GRAPHIC LOG LEGEND

CLAY | DEBRIS FILL | SILT | HIGHLY ORGANIC (PEAT) | SAND | SANDY CLAY | GRAVEL | CLAYEY SAND | SILTY CLAY | ____ | CLAYEY SILT | ____

DATE DRILLED	PAGE
3/5/99	1 of 1

DRILLING METHOD: HSA

DRILLED BY: LAYNE WESTERN

LOGGED BY: J. CRAWFORD

EXISTING GRADE ELEVATION (FT. AMSL)

LOCATION OR GRID COORDINATES

FIGURE 2.19 (UTPMW-5)
SOIL BORING LOG KM-5655-B

KERR-McGEE CORPORATION Hydrology Dept. - S&EA Division	KM SUBSIDIARY KMC LLC	LOCATION KM Tech Ctr Uranium Calib. Pits	BORING NUMBER UTPMW-5

DEPTH IN FEET	LITHOLOGIC DESCRIPTION	GRAPHIC LOG	UNIFIED SOIL FIELD CLASS.	BLOWS PER 6"	PID (ppm)	SOIL SAMPLE NO.	TYPE	DEPTH	REC.	REMARKS OR FIELD OBSERVATIONS
	0-2.3: Med brn clay + silty clay. Soft, grass roots, med plast. Slightly moist									
	2.3-8.5: Brick red-brown silty clay. Low plast, med stiff, homogeneous. Dry.								75%	
5	@6'-8.5' Local irreg splotches unoxid. grn-gry silt/clayey silt w/ vf mica, <5% of total. Otherwise red-brn clayey silt.			CL				4.5	95	
	8.5-13: Brick-red silt & sandy silt w/ vf sand. Low-nil plasticity, v. stiff. Shaley partings. Uncemented. Speckled w/ grn-gry unoxidized spots & subhoriz. bands.							9.5		
10				ML				11	75	
								13	70	
	13-19.8: Brick-red to maroon shaley, clayey silt, tr v.f. mica. Low-nil plast, stiff, dry.									
15	REFUSAL @ 16'							16	80	
	Cuttings brick red silty clay, shaley. Low plast. + stiff.			CL						Screen @ 10-18'
	EOH @ 19.5'									

EXPLANATION

- ▼ Water Table (24 Hour)
- ▽ Water Table (Time of Boring)
- PID Photoionization Detection (ppm)
- NO. Identifies Sample by Number
- TYPE Sample Collection Method

SPLIT-BARREL | AUGER | ROCK CORE | THIN-WALLED TUBE | CONTINUOUS SAMPLER | NO RECOVERY

- DEPTH Depth Top and Bottom of Sample
- REC. Actual Length of Recovered Sample in Feet

GRAPHIC LOG LEGEND

CLAY | DEBRIS FILL | SILT | HIGHLY ORGANIC (PEAT) | SAND | SANDY CLAY | GRAVEL | CLAYEY SAND | SILTY CLAY | ____ | CLAYEY SILT | ____

DATE DRILLED	PAGE
3-09-99	1 of 1

DRILLING METHOD: Hollow Stem Auger

DRILLED BY: LAYNE WESTERN

LOGGED BY: R3 (Bob Roe)

EXISTING GRADE ELEVATION (FT AMSL):

LOCATION OR GRID COORDINATES:

FIGURE 2.20 (UTPMW-6)
SOIL BORING LOG KM-5655-B

KERR-McGEE CORPORATION Hydrology Dept. - S&EA Division	KM SUBSIDIARY KMC LLC	LOCATION Tech Ctr U PITS	BORING NUMBER UTPMW-6

DEPTH IN FEET	LITHOLOGIC DESCRIPTION	GRAPHIC LOG	UNIFIED SOIL FIELD CLASS.	BLOWS PER 6"	PID (ppm)	SOIL SAMPLE NO.	TYPE	DEPTH	REC.	REMARKS OR FIELD OBSERVATIONS
	0-3': dk brn clay, mnr slt, trsd Med plast & stiffness, dry-moist. Homogeneous.		CL							LOG FROM AUGER CUTTINGS
5	3- : Red brn silty clay. Lo plast, stiff, dry. Wkly blocky text. V. mnr sd, f-c.									
			CL							
10	~11': 2-4' clayey silt red-brn, dry.		CL/ML							
15	Red-brn clayey silt/silty clay. Below ~15' mostly silt w/ silty, shaky clay zns.		CL							
20	E.O.H. 19'									

EXPLANATION

- ▼ Water Table (24 Hour)
- ▽ Water Table (Time of Boring)
- PID Photoionization Detection (ppm)
- NO. Identifies Sample by Number
- TYPE Sample Collection Method

SPLIT-BARREL | AUGER | ROCK CORE | THIN-WALLED TUBE | CONTINUOUS SAMPLER | NO RECOVERY

- DEPTH Depth Top and Bottom of Sample
- REC. Actual Length of Recovered Sample in Feet

GRAPHIC LOG LEGEND

CLAY | DEBRIS FILL | SILT | HIGHLY ORGANIC (PEAT) | SAND | SANDY CLAY | GRAVEL | CLAYEY SAND | SILTY CLAY | ____ | CLAYEY SILT | ____

DATE DRILLED	PAGE
3-09-99	1 of 1

DRILLING METHOD: AUGER

DRILLED BY: Layne / Mike Stone

LOGGED BY: R3

EXISTING GRADE ELEVATION (FT. AMSL)

LOCATION OR GRID COORDINATES

FIGURE 2.21 (UTPMW-7)
SOIL BORING LOG KM-5655-B

KERR-McGEE CORPORATION Hydrology Dept. - S&EA Division	KM SUBSIDIARY KMC LLC	LOCATION KM Tech Ctr UPR	BORING NUMBER UTPMW-7

DEPTH IN FEET	LITHOLOGIC DESCRIPTION	GRAPHIC LOG	UNIFIED SOIL FIELD CLASS.	BLOWS PER 6"	PID (ppm)	SOIL SAMPLE NO.	TYPE	DEPTH	REC.	REMARKS OR FIELD OBSERVATIONS
	0-0.5' gravel fill 0.5-2.5: med brn silty clay, med plasticity, blocky texture, homogeneous								80%	
	2.5-6': brick red-brn silty clay w/ low plastic, med. stiff, blocky, homogeneous, dry.				CL				—	
5	Gradational into clayey silt ~6'.									
	6-13': brick red-brn clayey silt, low to nil plastic, stiff + blocky.								95	
10	Shaley partings. Thin subhoriz. bands (beds) grn-gry silt. Loc black irridesc. coatings (MnOx?) on microcracks.								—	
	Refusal @ 13'				CL				90	
15	Continued red-brn clayey silt w/ mnr vf sd, ab shaley partings, non-plastic & stiff								ϕ	
	EOH 18'									

EXPLANATION

- ▼ Water Table (24 Hour)
- ▽ Water Table (Time of Boring)
- PID Photoionization Detection (ppm)
- NO. Identifies Sample by Number
- TYPE Sample Collection Method

SPLIT-BARREL | AUGER | ROCK CORE | THIN-WALLED TUBE | CONTINUOUS SAMPLER | NO RECOVERY

DEPTH Depth Top and Bottom of Sample
REC. Actual Length of Recovered Sample in Feet

GRAPHIC LOG LEGEND

CLAY | DEBRIS FILL | SILT | HIGHLY ORGANIC (PEAT) | SAND | SANDY CLAY | GRAVEL | CLAYEY SAND | SILTY CLAY | CLAYEY SILT

DATE DRILLED	PAGE
3-09-99	1 of 1

DRILLING METHOD: Hollow Stem Auger
DRILLED BY: LAYNE WESTERN
LOGGED BY: R3
EXISTING GRADE ELEVATION (FT. AMSL)
LOCATION OR GRID COORDINATES

FIGURE 2.22 (UTPMW-8)
SOIL BORING LOG KM-5655-B

KERR-McGEE CORPORATION Hydrology Dept. - S&EA Division	KM SUBSIDIARY KMC LLC	LOCATION Tech Ctr U Pits	BORING NUMBER UTPMW-8

DEPTH IN FEET	LITHOLOGIC DESCRIPTION	GRAPHIC LOG	UNIFIED SOIL FIELD CLASS.	BLOWS PER 6"	PID (ppm)	SOIL SAMPLE NO.	TYPE	DEPTH	REC.	REMARKS OR FIELD OBSERVATIONS
	0-0.5': gravel fill 0.5-2': brown silty clay, med plast 2'-18': red-brn silty clay + clayey silt. Low plasticity. Predominantly blocky w/ incr. shaley partings.		CL CL CL						∅	Rough log from Auger Cuttings
5										
10										
15										
	EOH@18'									

EXPLANATION

- ▼ Water Table (24 Hour)
- ▽ Water Table (Time of Boring)
- PID Photoionization Detection (ppm)
- NO. Identifies Sample by Number
- TYPE Sample Collection Method

SPLIT-BARREL; AUGER; ROCK CORE; THIN-WALLED TUBE; CONTINUOUS SAMPLER; NO RECOVERY

- DEPTH Depth Top and Bottom of Sample
- REC. Actual Length of Recovered Sample in Feet

GRAPHIC LOG LEGEND

CLAY; DEBRIS FILL; SILT; HIGHLY ORGANIC (PEAT); SAND; SANDY CLAY; GRAVEL; CLAYEY SAND; SILTY CLAY; CLAYEY SILT

DATE DRILLED	PAGE
3-10-99	1 of 1

DRILLING METHOD: AUGER

DRILLED BY: LAYNE WESTERN

LOGGED BY: R3

EXISTING GRADE ELEVATION (FT. AMSL)

LOCATION OR GRID COORDINATES

3 Description of Planned Decommissioning Activities

3.1 Decommissioning Objective

The decommissioning objective is to return the Kerr-McGee Technical Center (KMTC) facilities and any areas with any localized impacted soils to levels that meet the NRC's unrestricted use criteria and to terminate Source Material License SUB-986[1] in accordance with NUREG/BR-0241[4] requirements for a Type III facility. This objective includes the survey and, if required, decontamination of the laboratories and support areas, and the appropriate disposal of materials and any impacted soils above the unrestricted release criteria. Residual radioactive materials left in place will be present in ALARA concentrations such that any individual member of the public will receive a total annual dose of less than 25 mrem (TEDE) above background from all sources.

3.2 Radiological Criteria for Decommissioning and Unrestricted Release

3.2.1 Licensed Radionuclides Present

The source materials used at the KMTC consisted of natural uranium and thorium and their daughters, and purified natural uranium and depleted uranium. The materials, which could be present in any form, were typically ores containing uranium and thorium, yellowcake (U_3O_8), intermediate solid and liquid process streams from a uranium mill, conversion facility and a rare-earths facility, and UF_6 in gaseous or liquid form typically provided in 2 kg cylinders. All of these materials came from licensed fuel cycle facilities. Uranium exploration geological core samples were also tested at the KMTC.

3.2.2 Determination of Background

3.2.2.1 Background in Building Materials or Equipment

Background radioactivity for matrix specific materials and equipment was measured in unaffected areas of the facility. Table 3.1 includes a summary of background radioactivity for a number of matrices. Additional matrix backgrounds will be collected as needed to supplement this data. For final status survey analysis, matrix materials for which a background does not exist is assumed to have a background of zero. The background threshold is used as an indicator of whether increased background radioactivity is within normal statistical variations. If radioactivity is measured above the threshold, it is more likely to be attributable to facility activities.

Table 3.1
Background Reference Data and Thresholds for Building Surfaces

Matrix Code	Matrix Material	Number of Data Points	Average Background (dpm/100cm^2)	Sigma (dpm/100cm^2)	Background Threshold* (dpm/100cm^2)
C	Concrete	15	610	201	1012
CB	Concrete Block	15	1683	187	2057
CTP	Countertop	15	540	390	1320
CTX	Celotex Tile	10	969	117	1203
FT	Formica Tops	15	272	144	560
GB	Gypsum Board	15	106	213	532
PL	Plaster	15	471	359	1189
VT	Vinyl Tile	15	306	180	666

* Mean value plus two times standard deviation (sigma)

3.2.2.2 Background in Soils

Background concentrations for radionuclides of interest were collected in a total of 291 unaffected locations of the KMTC site. These measurements were taken from the southern half of the site and ranged from zero to 800 meters East and from zero to 400 meters North. All buildings, parking areas and facilities are situated North of 580 Meters north. Table 3.2 provides a summary of the background data as measured using Cimarron soil counter #1.

Table 3.2
Background Reference Data for Soils

Isotope	Mean (pCi/g)	Sigma (pCi/g)	Location	Number of Survey Points
Total Uranium	1.8	0.9	Unaffected areas (southern half of the site)	291
Natural Thorium	2.3	0.3	Unaffected areas (southern half of the site)	291
Radium 226	0.6	0.1	Unaffected areas (southern half of the site)	291

3.2.2.3 Background in Groundwater

Background concentration ranges for groundwater have been established based upon the concentration of uranium in up-gradient wells. Up-gradient wells were determined based upon the groundwater potentiometric surface. Wells MW-3, -4, -5, and -6 (see Drawing TECHCNTR_003_Rev_0) have been assigned as background (i.e., up-gradient) wells. The mean concentration and standard deviation of the mean for total U, based upon all up-gradient well samples collected, is 12.0±2.8 pCi/l. Groundwater background data and discussion are presented in Section 2.4 and Table 2.4.

3.2.3 Site Characterization

3.2.3.1 Building Characterization

A review of historical data identified all the rooms and buildings in which source materials were either used or stored. These rooms are shaded yellow in figures 2.4 and 2.5. Two direct α/β readings were taken on each wall and several more were taken on each floor surface. Based upon analysis of the data taken and using the guidelines stipulated in MARSSIM, the rooms were grouped into survey units and classified as Class 1 or 2. It is expected that many of the survey units will contain radioactivity from more than parent series, thus resulting in use of the unity rule when determining the pertinent release criteria. Reclassification of certain areas may be required after more data are obtained, in accordance with the requirements of Section 6.6. Table 3.3 contains a summary of the building characterization data for each survey unit. The survey units are graphically depicted in drawing TECHCNTR_006_REV_0.

Table 3.3
Building Characterization Data

Survey Unit	Rooms	Area (ft^2)	Class	Points	α_{Max}*	α_{Mean}*	β_{Max}*	β_{Mean}*
100	C-13,17,19; E-12,14	8,030	2	107	70	9	1,164	45
101	C-29a,29b, C-33	6,994	2	100	561	13	840	49
102	C-39;E-22,30	7,919	2	87	390	11	432	33
103	C-1,1a; E-2,8,10	7,008	2	97	120	16	1,464	211
104	C-21,23,25,27	7,497	2	52	60	10	420	41
105	F-2&4,4a,12	5,811	2	58	50	7	579	63
106	P-1 Floor plus walls to 6ft	10,350	2	20	30	7	1,524	634
107	P-2	2,362	1	10	200	21	12,000	1,892
108	S-1	3,952	2	13	44	23	2,338	1,643
109	T-1	2,298	2	17	672	54	966	100
110	E-28	2,148	1	19	5,000	531	28,000	1,774

* gross dpm per 100 cm^2 (no matrix background subtraction performed)

3.2.3.2 Soil Characterization

In addition to the background data taken in the non-impacted reference areas to the south, the areas north of 600 meters North were scanned with a 3" x 0.5" shielded

Sodium Iodide and Micro-R detectors and soil samples were taken in areas of interest. Readings were recorded where they exceeded approximately 1.5 times background (1.5 x background is approximately 5,000 cpm for NaI(Tl) and 15 Micro-R per hour). Particular interest was paid to the Uranium test pits, the limestone pit east of the main building and drainage locations.

Analysis of the characterization data combined with a survey of historical information resulted in the arrangement and classification of soil survey units (SSU) as depicted in drawing Techcntr_002_rev_0. A summary of the available characterization survey data and survey unit classification is presented in Table 3.4. Where survey data were not obtained, classification was based upon historical information and site geography, as applicable.

Table 3.4
Soil Characterization Data

				Total U(pCi/g)		Nat Th(pCi/g)		Ra-226(pCi/g)			
Area Location	*Pts*	*SSU***	*Class*	*Max*	*Mean*	*Max*	*Mean*	*Max*	*Mean*	NaI $_{Max}$ (cpm)	μR $_{Max}$ (μR/hour)
U Test Pits	32	01	1	3.0	1.1	2.8	2.1	0.8	0.6		
N of Pits	43	02	1	53.1	2.8	11.3	2.3	7.8	1.0	12,200	34
S of Pits	1	03	1	1.1	1.1	2.8	2.8	0.7	0.7		15
Buffer	2	04	2	2.6	2.4	2.8	2.8	0.9	0.8	5,000	
Drain Line	6	05	1	10.2	2.9	3.1	2.7	1.2	0.8	5,000	
TSSL Drain Area	0	06	1							79,000	180
Access Rd	0	07	1							18,000	31
Yard	0	08	1								
Yard	0	09	1								16
Buffer	0	10	2								
Storage Area	0	11	1							30,000	80
Storage Area	0	12	1							56,000	70
Storage Area	0	13	1								16
Storage Area	0	14	1								16
N/E of bldg	0	15	2							6,700	18
E. Drainage	0	16	1							7,000	
E. Drainage	2	17	1	261	183	8.1	6.1	54.4	37.1	35,000	135
E. Drainage	2	18	1	21.6	14.4	2.5	2.2	4.3	3.3	9,000	22
E. Drainage	70	19	1	26.1	2.3	32.6	3.9	2.5	0.8	17,000	22
E. Drainage	26	20	1	13.1	1.6	5.7	2.3	1.2	0.6	12,000	24
E. Pond	8	21	1	2.1	1.2	2.9	2.5	0.9	0.7	5,200	17
E. Pond	12	22	1	1.9	1.2	2.8	2.6	0.9	0.7	5,100	15
E. Pond	0	23	1								15
Buffer	0	24	2								

* *Concentrations and data given in this table include the contribution from natural background.*

** *Soil Survey Unit*

3.2.3.3 Ground Water Characterization

(Section 2.4 of the D-Plan specifies the available characterization data)

3.2.4 Release Criteria for Radionuclides on Buildings and Surfaces

The release criteria for building surfaces are also applied to fixed equipment that is not expected to be removed. The fixed equipment have the survey, sampling and release criteria of building structures and slabs. Some examples of building surfaces and fixed equipment are floors, walls, ceilings, doors, windows, sinks, hoods, lighting fixtures, built-in laboratory benches, built-in furniture, and ventilation ducts.

The surface release criteria for uranium and thorium contamination on buildings and surfaces shall be equivalent to those levels corresponding to a net dose of 25 mrem per year for an individual member of the public. Table 3.3 displays the release limit (DCGLw) for the radionuclides of interest[1]. The technical data and calculations for the derivation of the DCGLw values are presented in Appendix D. The Th-232 and progeny limit shall be used for final status surveys unless the fractional contribution from each series is determined and an appropriate DCGL is derived using the unity rule per Appendix D.

Table 3.5
Building Surfaces Release Criteria

Nuclide	DCGLw (βPM/100cm^2)	$DCGL_{EMC}$[a] (βPM/100cm^2)
Thorium-232 and progeny	2,150	6,450
Uranium series through U-234	10,250	30,700
Ra-226 and progeny	10,100	30,300

[a] *The Elevated Measurements Concentration applies to Class 1 Survey Units and are determined on an a priori basis based upon the contaminant and the grid spacing of a given survey unit. A detailed discussion of EMC calculation is presented in section 6 and Appendix D.*

3.2.5 Release Criteria for Materials and Equipment

Materials and equipment will be cleaned and released in accordance with NRC "Guidelines for Decontamination of Facilities and Equipment Prior to Release for Unrestricted Use or Termination of Licenses for Byproduct, Source, or Special Nuclear Material". Equipment or other materials that do not meet release criteria (e.g. small diameter piping which cannot be easily surveyed or cleaned) will be disposed at a licensed radioactive waste disposal facility. Removable equipment includes items such as the mobile cabinets under the laboratory countertops or fixed equipment that will be removed from the survey unit. Unaffected removable equipment such as laboratory

[1] Appendix D, Tech memo Derivation of Indoor Surface DCGLs for KMTC, Revision 1, H.J. Newman, April, 3, 2001.

supplies, books, computers, etc. shall be excluded from the release criteria. Table 3.6 displays the release criteria for removable materials and equipment.

Table 3.6
Release Criteria for Removable Materials & Equipment[a]

Nuclide	Average	Maximum	Removable
Thorium (nat) and Th-232	1,000 dpm/100 cm²	3,000 dpm/100 cm²	200 dpm/100 cm²
Uranium (nat)	5,000 dpm/100 cm²	15,000 dpm/100 cm²	1,000 dpm/100 cm²

[a]*The release limit in dpm/100 cm² is based upon the total beta emissions.*

3.2.6 Release Criteria for Soils

The uranium calibration test pits will have all source materials removed, as well as any adjoining impacted soils containing source material, and disposed of at a licensed low-level radioactive waste disposal facility. Affected soils below the release criteria will remain in place provided that the release criteria are met. The proposed release criteria for soil are expressed as the concentration, in pCi/g, at which a potential dose (TEDE) to the average a member of the critical population would be 25 mrem/y. RESRAD modeling has been performed to determine the DCGLs for both subsurface (Appendix B) and surface soil (Appendix C). These criteria are sumarized in tables 3.7 and 3.8.

Table 3.7
Subsurface Uranium Release Limits for KMTC Test Pit

Application	Dose Conversion Factor (mrem/y/pCi/g)	Concentration for a 25 mrem/y limit (pCi/g)
Uranium Test Pit	0.2225	110

Table 3.8
Surface Soil DCGLs for KMTC

Nuclide Series	Dose Conversion Factor (mrem/y/pCi/g)	DCGLw (pCi/g)
Thorium-232 and progeny	4.802	5.2
Total Uranium (to Uranium –234)	0.141	170
Ra-226 and progeny	7.102	3.5

3.2.7 Release Criteria for Groundwater

Groundwater with a modeled 25 mrem/y TEDE maximum annual dose (based upon evaluation of all pathways) will require no further action. The City of Oklahoma City requires that all buildings and residences in the area be hooked into their water/sewage systems, therefore it is unlikely that any wells in the area would be used for drinking water supplies. Appendix A documents the calculations to support the release criteria for total uranium in water. The release criteria developed in Appendix A is 226 pCi/L for total uranium in groundwater.

3.2.8 Overall Release Criteria

Prior to submittal of the application for license termination, an evaluation will be performed to ensure that the potential total effective dose equivalent from all applicable pathways to an average member of the critical population (i.e., soil, groundwater, and building surfaces) is less than or equal to 25 mrem per year.

3.2.9 ALARA Considerations

All decommissioning work will be guided by ALARA principles and substantial planning efforts will be incorporated to ensure that decommissioning activity exposures fall within regulatory guidelines. Areas for remediation will be evaluated for exposure potential and special work permits (SWPs) will be developed to mitigate against unnecessary exposures where needed. In the history of the KMTC activities there have never been any employee exposures greater than that allowed for the general public. Exposures have typically been indistinguishable from those in laboratory areas, (i.e. monthly film badge results under 10 mrem) where nuclear materials were not present or used. The KMTC set an exposure action limit of greater than 40 mrem in any month for examination of the reported film badge dose. The incidents where a dose greater than 40 mrem in a month may have occurred are provided in Table 3.9. These minor incidents were chiefly associated with activities in the x-ray diffraction analytical laboratory and are associated with exposure to the extremities, i.e. fingers and hands. The greatest lifetime exposure at the facility for any one person from 1964 through 1999 was 282 mrem. That person worked almost solely in x-ray diffraction applications and the greater amount of dose was to the hands and fingers (finger badge).

Table 3.9
Employee Radiation Exposure History[1,2,3,4]

MO/YR	EXPOSURE	LOCATION	SOURCE
10/67	60 mrem	Film Badge	UO_2 Dust[5]
7/68	90 mrem	Film Badge	X-Ray
7/68	60 mrem	Wrist Badge	X-Ray
3/72	80 mrem	Finger Badge	X-Ray
9/77	170 mrem	Finger Badge	Not assigned[6]
9/88	50 mrem	Finger Badge	X-Ray
12/90	60 mrem	Film Badge	Processing Error

Notes:
1) Film badges were assigned and monitored on a monthly basis.
2) Typical results were reported as M (less than 10 mrem)
3) Exposures were typically from those with analytical duties, mostly with x-ray applications.
4) Operations span the time period 1964 through 1999. Investigation level was greater than 40 mrem dose in a month.
5) Exposure due to UO_2 dust contamination of film badge due to sample preparation in prep lab.
6) Film Laboratory did not assign as alpha, beta, neutron exposure; Assume X-ray based on individual and work assignment

3.3 Cleanup Candidates and Tasks

3.3.1 Uranium Calibration Test Pits

Impacted soils exceeding the release criteria of Section 3.2.6 have been removed and placed into roll-offs (intermodals) and are awaiting shipment to Environcare for disposal.

3.3.1.1 Groundwater in the Vicinity of Uranium Calibration Test Pits

Ongoing groundwater sampling from the test pit excavation is being performed to demonstrate that the groundwater concentrations are below the release criteria described in Section 3.2.7.

3.3.2 Surface Soils

Affected soils and other land areas (i.e. paved areas) on the KMTC facility have been identified with an extensive characterization effort. Drawing #TECHCNTR_002_rev_0 identifies the affected outdoor areas that are segregated by survey unit and classification. Areas that exceed the surface release criteria will be cleaned or removed and resurveyed to ensure that no areas that exceed release criteria remain.

3.3.3 Laboratories

Based on a review of the historical survey data for the laboratories, characterization surveys were performed that identified affected areas. Figure 2.4 highlights the affected areas in the main building and storage building in yellow. Figure 2.5 similarly highlights the affected areas of the TSSL building. Areas that are identified as exceeding the release limits of Section 3.2.4 and 3.2.5 will be decontaminated or removed, whichever is more feasible.

3.4 Decommissioning Waste Management

3.4.1 Disposal Location

Source material wastes generated during decommissioning will be sent to a licensed LLRW disposal facility. Envirocare of Utah is currently the location of choice. The

facility is licensed to receive the types of material that would come from the KMTC, (i.e. low specific activity material comprised almost totally of soils containing natural uranium ores and yellowcake in low concentrations.)

3.4.2 Waste Generation

The wastes generated during decommissioning activities will be primarily soils containing known amounts of uranium ore and/or yellowcake used to make up calibration standards. These materials are located in the uranium calibration test pits described in 3.3.1. The volume of material has been estimated as being approximately 32 cubic yards. Other waste materials which may be generated will most likely be associated with soil excavation activities or materials for which decontamination is not feasible.

3.4.3 On-Site Storage

Waste will be stored in a designated location that is access restricted. The area will be inspected as part of the KMTC's routine operations. Security during off-work hours is provided by Kerr-McGee's security that performs periodic inspection rounds.

3.4.4 Free Release of Materials

Materials to be free-released will be cleaned if necessary, and monitored with radiation detection instruments. All surfaces will be inspected and released in accordance with NRC free release criteria as presented in section 3.2.5.

3.5 Credible Accidents resulting from decommissioning activities

The KMTC has evaluated the potential for exposure from conditions occurring both on-site and off-site. The evaluation showed that a transportation accident was the most credible for public and employee exposures occurring off-site, while accidents involving spillage of uranium calibration test pit materials was the most credible for on-site exposures. Since decommissioning efforts will result in excavation, and shipment of uranium calibration test pit materials will occur, the KMTC presents a conservative, hypothetical off-site scenario involving the spillage of a shipment of radioactive material being transported, as well as an on-site scenario associated with loading activities for a shipment.

In order to develop the accident scenarios, the following assumptions and references were made and utilized:

Assumptions:

1. A shipment contains 435 ft^3 of pit material.
2. For the off-site scenario, the transport vehicle is involved in an accident, and all containers are assumed to be breached, spilling their contents over an area of 870 ft^2. The average depth of the spill is 6 inches (15 cm).
3. Exposure pathways include inhalation of suspended particulates and direct gamma exposure.
4. The time to clean up the off-site spill is 1/2 day (12 hours), while the time to clean up the on-site spill is 2 hours.

5. Based upon uranium calibration test pit assays, the average concentration of total uranium in the shipment is 0.25 Wt.% U, or 1675 pCi/g. (See Section 2.2.2.3)

3.5.1 Off-Site Radiological Accident Scenario

3.5.1.1 Clean-up Worker

Emission Rate (E) = 0.01 [a λ K C L' V'] (See Reference 12)

Where:

E = Annual emission rate in tons/acre-y.

a = Fraction of total wind erosion losses that could be measured as suspended particulates (assume 0.41 for fine soil per Reference 12).

λ = Soil erodability in tons/acre-y (assume 52 for fine soil per Reference 12).

K = Surface Roughness factor (assume 1.0 for smooth pile per Reference 12).

C = Climate factor (assume 20 for Oklahoma City per Reference 12).

L' = Field width factor (0.7 per Reference 12).

V' = Vegetation factor (1.0 for no vegetation present per Reference 12).

E = (0.01)(0.41)(52)(1.0)(20)(0.7)(1.0) = 2.98 tons/acre-y

The surface area emission rate, Q_s for fugitive dust due to wind is therefore:

Q_s = (2.98 tons/acre-y)(2000 lb/ton)(454 g/lb)(1675 pCi/g)
(870 ft^2)(0.0929 m^2/ft^2)(acre/4050 m^2)(y/3.15E7 s) = 2.9 pCi/s total U.

Calculation of the volumetric emission rate, Q_v, from the cleanup, hauling, and replacement of soil into new containers can be calculated using the estimate for suspended particulates from Reference 12, which is 0.38 lbs/yd^3. This factor is applicable to front end loader movement of topsoil, and is also assumed to represent any soil movement using shovels or other tools.

Q_v = [(0.38 lbs/yd^3)(yd^3/27 ft^3)(435 ft^3)(454 g/lb)(1675 pCi/g)]
÷ [(0.5 day)(24h/day)(3600s/h) = 107.8 pCi/s total U.

The total source term emission rate is $Q_s + Q_v$ = 110.7 pCi/s total U.

An extremely conservative estimate of dose to the cleanup worker is further made by assuming that the area immediately above the spilled material has a "lid" at a height of 2 m, which is the height for the breathing zone of the worker. Wind at a speed of 1 m/s is assumed to blow the suspended particulates across the breathing zone of the worker, who is assumed to always stand downwind at the edge of the spill. The worker is assumed to be present for 12 hours and breathes at a rate of 1.2 m^3/hour. By imposing a "lid" at a

height of 2 m, there can be no dispersion above this height. Likewise, it is also assumed that there is no atmospheric dispersion at right angles to the wind direction. Thus, the model portrays a worst case scenario. Assuming a circular area of 870 ft^2, the diameter of the spill, D, will be:

$$D = (4A/\pi)^{1/2} = \{[(4)(870\ ft^2)]/\pi\}^{1/2} = 33.3\ ft.$$

The concentration of total uranium above the spill will be limited by the steady state emissions and the wind speed. The time, t, required for a particle at the leading edge to traverse the spill and reach the hypothetical worker at the trailing edge is:

$$t = 33.3\ ft \div (1m/s)(1.0\ ft/0.3048m) = 10.1\ s.$$

Thus, the steady state average concentration, C, of total uranium over the spill area can be calculated as:

$$C = [(110.7\ pCi/s)(10^{-6}\mu Ci/pCi)(10.1\ s)]$$
$$\div [(870\ ft^2)(0.0929\ m^2/ft^2)(2\ m)(10^6\ mL/m^3) = 6.9\ E\text{-}12\ \mu Ci/mL$$

This concentration is an extreme overestimate of the actual concentration due to the fact that the wind causing the dust emission is not considered to carry and disperse the suspended soil particles outside the bounds of the spill area.

Assuming a 1.2 m^3/hour inhalation rate for the worker (Reference 13, p. 216), a 12 hour work period, and using dose conversion factors (DCFs) from Reference 3, the hypothetical effective dose due to inhalation will be:

$$(6.9\ E\text{-}12\ \mu Ci/mL)(1.2\ m^3/hour)(12\ hours)(10^6\ mL/m^3)(3.58\ E\text{-}05\ Sv/Bq)$$
$$(3.7\ E{+}09\ mrem/\mu Ci\ per\ Sv/Bq) = 13.2\ mrem\ TEDE.$$

The dose to the bone surface, under the same circumstances is estimated as:

$$(6.9\ E\text{-}12\ \mu Ci/mL)(1.2\ m^3/hour)(12\ hours)(10^6\ mL/m^3)(9.78\ E\text{-}06\ Sv/Bq)$$
$$(3.7\ E{+}09\ mrem/\mu Ci\ per\ Sv/Bq) = 3.6\ mrem\ bone\ surface.$$

Note: For simplicity, it is assumed that the DCFs for U-234, U-235, and U-238 are equivalent. The most conservative (i.e., highest) DCF was utilized (for effective dose, Class Y U-234: 3.58 E-05 Sv/Bq; for bone surface, Class D U-238: 9.78 E-06 Sv/Bq).

The dose due to direct exposure can be estimated using the dose conversion factors from Reference 14, Table E.2. For uranium volume sources with a thickness of 6 inches (15 cm), the DCFs are as follows:

- U-234: 1.85 E-16 Sv/d per Bq/m^3

- U-235: 3.24 E-13 Sv/d per Bq/m^3
- U-238: 4.76 E-17 Sv/d per Bq/m^3

The DCF for U-235 will provide the most conservative estimate of dose to the worker from direct exposure, since it is three to four orders of magnitude greater than the DCFs for U-234 or U-238. In addition, the EPA's default soil density of 1.625 E+06 g/m^3 (per Reference 14, Table E.2) was used. The dose calculation for direct exposure is performed as follows:

$$(1675\ pCi/g)(0.037\ Bq/pCi)(1.625\ E{+}06 g/m^3)(3.24\ E{-}13\ Sv/d\ per\ Bq/m^3)$$
$$(100\ rem/Sv)(1000\ mrem/rem)(0.5\ d) = 1.6\ mrem.$$

Summing the external and internal doses, the estimated TEDE will be 14.8 mrem, while the dose to the bone surface will be 5.2 mrem, under the above worker scenario.

Thus, the maximum projected dose to a cleanup worker from spillage of a shipment of uranium material from the KMTC facility is conservatively projected to be 14.8 mrem TEDE and 5.2 mrem to the bone surface.

3.5.1.2 Off-Site Radiological Accident Scenario-Member of the Public

A member of the public is assumed to be at a distance of 1 km from the spill, and is constantly in the plume centerline in the downwind direction. The atmospheric stability will be assumed as extremely stable, Class F. The spill will be modeled as a point source, with emission rates as defined for the cleanup worker scenario.

The basic atmospheric dispersion equation for a ground level source at the plume centerline is:

$$\chi = Q \div (2\pi)(\sigma_y)(\sigma_z)(u).$$

Sigma y and sigma z were picked from Figures 3-2 and 3-3 in Reference 16, using Class F atmospheric stability curves. The wind speed is assumed to be 1 m/s.

The concentration of airborne total uranium, χ, is calculated:

$$\chi = 1.12\ E{-}10\ Ci/s \div (2\pi)(34\ m)(14\ m)(1\ m/s) = 3.7\ E{-}14\ Ci/m^3$$

The effective dose can be calculated using the dose conversion factors from EPA Federal Radiation Guidance Report No. 11(Reference 14). The dose conversion factors for U-234, U-235, and U-238 are similar. Therefore, simplification of the problem can be achieved through the use of the dose conversion factor for U-234, which is the most conservative. Inhalation Class Y is assumed for the re-suspended material. The breathing rate is assumed to be 9.6 m^3/day.

Effective Dose to the Member of the Public = (3.7 E-14 Ci/m^3) (9.6 m^3/d) (0.5 d) (3.58 E-05 Sv/Bq) (3.7 E+09 mrem/μCi per Sv/Bq) (10^6 μCi/Ci)

= 0.024 mrem.

The upper estimate of dose to the member of the public is 0.024 mrem, which is insignificant. This estimate utilized conservative assumptions of wind speed and stability

class and placed the individual in the plume centerline for the entire duration of the cleanup. In addition, no shielding or dilution effects were considered as is normally done to account for shelter of the individual.

3.5.2 On-Site Radiological Accident Scenario-Radiation Worker

The on-site scenario assumes that a single container containing the average concentration of total U (1675 pCi/g total U) is ruptured and the entire contents are spilled, covering an area of 15 ft^2 to a depth of 6 inches (15 cm). The calculations can be performed utilizing the same methodology as for the Off-Site Scenario-Cleanup Worker. The cleanup is assumed to take 2 hours.

Emission Rate (E) = 0.01 [a λ K C L' V'] based upon Reference 12.

$$= (0.01)(0.41)(52)(1.0)(20)(0.7)(1.0) = 2.98 \text{ tons/acre-y}$$

The surface area emission rate, Q_s for fugitive dust due to wind is therefore:

$$Q_s = (2.98 \text{ tons/acre-y})(2000 \text{ lb/ton})(454 \text{ g/lb})(1675 \text{ pCi/g})(15 \text{ ft}^2)$$
$$(0.0929 \text{ m}^2/\text{ft}^2)(\text{acre}/4050 \text{ m}^2)(\text{y}/3.15\text{E}7 \text{ s}) = 0.05 \text{ pCi/s total U.}$$

Calculation of the volumetric emission rate, Q_v, from the cleanup, hauling, and replacement of soil into new containers can be calculated using the estimate for suspended particulates from Reference 12, which is 0.38 lbs/yd^3. This factor is applicable to front-end loader movement of topsoil, and is also assumed to represent any soil movement using shovels or other tools.

$$Q_v = [(0.38 \text{ lbs/yd}^3)(\text{yd}^3/27 \text{ ft}^3)(7.5 \text{ ft}^3)(454 \text{ g/lb})(1675 \text{ pCi/g})]$$
$$\div [(2\text{h})(3600\text{s/h})] = 11.1 \text{ pCi/s total U.}$$

The total source term emission rate is $Q_s + Q_v = 11.2$ pCi/s total U.

An extremely conservative estimate of dose to the cleanup worker can be made by assuming that the area immediately above the spilled soil has a "lid" at a height of 2 m, which is the height for the breathing zone of the worker. Wind at a speed of 1 m/s is assumed to blow the suspended particulates across the spilled waste to the breathing zone of the worker, who always stands downwind at the edge of the spill. The worker is assumed to be present for 2 hours and breathes at a rate of 1.2 m^3/hour. By imposing a "lid" at a height of 2 m, there can be no dispersion above this height. Likewise, it is also assumed that there is no atmospheric dispersion at right angles to the wind direction. Thus, the model portrays a worst case scenario. Assuming a circular area of 15 ft^2, the diameter of the spill, D, will be:

$$D = (4A/\pi)^{1/2} = \{[(4)(15 \text{ ft}^2)]/\pi\}^{1/2} = 4.4 \text{ ft.}$$

The concentration of total uranium above the spill will be limited by the steady state emissions and the wind speed. The time, t, required for the a particle at the leading edge to traverse the spill and reach the hypothetical worker at the trailing edge is:

$$t = 4.4 \text{ ft} \div (1\text{m/s})(\text{ft}/0.3048\text{m}) = 1.3 \text{ s.}$$

Thus, the steady state average concentration, C, of total uranium over the spill area can be calculated as:

$$C = [(11.2 \text{ pCi/s})(10^{-6}\mu\text{Ci/pCi})(1.3 \text{ s})] \div [(15 \text{ ft}^2)(0.0929 \text{ m}^2/\text{ft}^2)(2\text{m})(10^6 \text{ mL/m}^3)]$$
$$= 5.2 \text{ E-12 } \mu\text{Ci/mL}$$

This concentration is an extreme overestimate of the actual concentration due to the fact that wind causing the dust emission is not considered to carry and disperse the suspended soil particles outside the spill area.

Assuming a 1.2 m^3/hour inhalation rate for the worker (Reference 13, p. 216), a 2 hour work period, and using dose conversion factors (DCFs) from Reference 14, the hypothetical effective dose due to inhalation will be:

$$(5.2 \text{ E-12 } \mu\text{Ci/mL})(1.2 \text{ m}^3/\text{hour})(2 \text{ hours})(10^6 \text{ mL/m}^3)(3.58 \text{ E-05 Sv/Bq})$$
$$(3.7 \text{ E+09 mrem/}\mu\text{Ci per Sv/Bq}) = 1.7 \text{ mrem TEDE.}$$

The dose to the bone surface, under the same circumstances is estimated as:

$$(5.2 \text{ E-12 } \mu\text{Ci/mL})(1.2 \text{ m}^3/\text{hour})(2 \text{ hours})(10^6 \text{ mL/m}^3)(9.78 \text{ E-06 Sv/Bq})$$
$$(3.7 \text{ E+09 mrem/}\mu\text{Ci per Sv/Bq}) = 0.45 \text{ mrem bone surface.}$$

Note: For simplicity, it is assumed that the DCFs for U-234, U-235, and U-238 are equivalent. The most conservative (i.e., highest) DCF was utilized (for effective dose, Class Y U-234: 3.58 E-05 Sv/Bq; for bone surface, Class D U-238: 9.78 E-06 Sv/Bq).

The dose due to direct exposure can be estimated using the dose conversion factors from Reference 14, Table E.2. For uranium volume sources with a thickness of 15 cm, the DCFs are as follows:

- U-234: 1.85 E-16 Sv/d per Bq/m^3
- U-235: 3.24 E-13 Sv/d per Bq/m^3
- U-238: 4.76 E-17 Sv/d per Bq/m^3

The DCF for U-235 will provide the most conservative estimate of dose to the worker from direct exposure, since it is three to four orders of magnitude greater than the DCFs

for U-234 or U-238. In addition, the EPA's default soil density of 1.625 E+06 g/m^3 (per Reference 15, Table E.2) was used. The dose calculation for direct exposure is performed as follows:

$$(1675\ \text{pCi/g})(0.037\ \text{Bq/pCi})(1.625\ \text{E+06 g/m}^3)(3.24\ \text{E-13 Sv/d per Bq/m}^3)$$
$$(100\ \text{rem/Sv})(1000\ \text{mrem/rem})(\text{d}/24\ \text{h})(2\text{h}) = 0.3\ \text{mrem.}$$

Summing the external and internal doses, the estimated TEDE will be 2.0 mrem, while the dose to the bone surface will be 0.7 mrem, under the above worker scenario.

Thus, the maximum projected dose to a radiation worker from the on-site spillage of a drum containing uranium soils and debris from the Cimarron facility is projected to be 2.0 mrem TEDE and 0.7 mrem to the bone surface.

The KMTC evaluated three hypothetical exposure scenarios related to on-site and off-site accidents. The off-site scenarios considered doses to workers and a member of the public resulting from the spillage of waste material in transit to a low-level waste disposal facility. The on-site scenario addressed potential exposure due to the cleanup of spilled material being packaged for disposal. Conservative assumptions were utilized to generate the three scenarios.

These dose estimates are considered to represent very conservative upper bounds of dose. The calculations demonstrate that the radiological consequences of accidents involving radioactive waste spillage are insignificant for members of the public, and will result in very low doses to cleanup workers.

4 Decommissioning Organization and Administration

4.1 Licensee Management Organization

4.1.1 Corporate Management Organization

The Kerr-McGee Corporation Safety and Environmental Affairs Division will have primary responsibility for the Kerr-McGee Technical Center (KMTC) decommissioning activities. In this management role, the Vice President & Site Manager – Cimarron Corporation will be responsible for overseeing and managing all KMTC decommissioning activities. The Vice President & Site Manager – Cimarron Corporation will have reporting responsibilities to the Vice-President, Hydrology, Geology, & Safety and Environmental Affairs Division and also to the Senior Vice President, Kerr-McGee Chemical LLC, which has management responsibility for the KMTC activities.

4.1.2 Decommissioning Group Management Organization

The Vice President & Site Manager – Cimarron Corporation will have reporting to him both the Decommissioning Activity RSO and the KMTC RSO to assure that all policies and procedures either in place or developed for this specific facility decommissioning task meet license and KMTC policies and procedures. The Director, Safety, Quality and Engineering Technology will have reporting to him the Director, Quality and Regulatory Compliance and the Director of Regulatory Compliance to assure that all policies and procedures either in place or developed for this specific facility decommissioning task meet all required regulatory and quality requirements. Other personnel reporting to the Vice President & Site Manager–Cimarron Corporation include the Decommissioning Supervisor (who directs the individual work tasks associated with the decommissioning activities), and the QA Coordinator (who assures that data and records are maintained in accordance with established procedures). This management organization is shown in Figure 4.1.

4.1.3 Contractor Assistance

Kerr-McGee has obtained the services of NEXTEP Environmental, Inc. to assist in the planning, development, and implementation of the KMTC decommissioning activities. NEXTEP Environmental, Inc., located in Louisville, Kentucky, is currently assisting Kerr-McGee in carrying out it its decommissioning activities at both the Cimarron and Cushing sites located in Oklahoma.

4.2 Policies and Procedures Organization

4.2.1 Objective

Written policies and procedures governing the decommissioning activities will assure that a rigorous and standard process is followed and is documented. All facets of the required activities, from radiation safety, instrumentation and calibration, and work processes for each area are referenced and followed. Audits of activities will assure compliance.

Because the decommissioning work will be performed primarily by persons familiar with decommissioning at the Cimarron facility, use of the personnel, procedures,

instrumentation, and calibration routines used there will be applied to the maximum extent practicable at the KMTC.

4.2.2 Responsibilities

All employees working on the decommissioning project are required to understand and follow specialized written procedures and review and acknowledge special work permits for each specific job. During decommissioning activities, all employees are to bring to their supervisor's or manager's attention any circumstance that is different from what is called for in the work plan/special work permit or could present a situation that could be unsafe or cause unnecessary radiation exposure.

The project management team is to assure that the proper tools and procedures are available to do the work assigned and to be responsive to any unsafe or unusual exposure situations.

4.2.3 Written Policies, Procedures and/or Work Permits

All work performed during decommissioning activities is to be in accordance with written policies and procedures that have been reviewed and approved by the Decommissioning Activity and KMTC RSOs and decommissioning management. Any deviations from the written guidance are to be identified and accompanied with the appropriate documentation that the change was noted, discussed, and approved by the RSOs and decommissioning management.

4.2.4 Worker Training

The personnel that will be associated with the decommissioning effort typically have specialized experience in the activities to be performed. Many of these personnel worked at the Cimarron facility, assisting in those decommissioning efforts.

Training programs, specific to the needs of workers and KMTC employees that may require access to certain areas while decommissioning is going on, will be utilized. Annual training of workers which is documented and routine Special Work Permit (SWP) training will be given before any remediation or final status survey task is begun.

4.2.5 Safety Policies and Procedures

All work is to be done in a manner that is safe and in accordance with both KMTC and Cimarron safety policies and procedures. In a circumstance where there is a potential conflict between KMTC and Cimarron procedures, there will be a meeting of decommission management and the RSO representatives from both organizations to resolve the matter before proceeding. A written record will be maintained for any such decision.

4.2.6 Coordination of Decommissioning Activities Between Corporate and KMCLLC Management

As noted above, both units have reporting responsibilities to each other. Much of the coordination will be done at the RSO and facility management level. The KMTC RSO has oversight responsibilities and review responsibility for project matters that may affect other KMTC operations or license conditions, while the Decommissioning Activity RSO

(Cimarron RSO) has oversight responsibility for decommissioning procedures, surveys, and radiation protection.

4.2.7 Applicability of KMCLLC Facility Policies and Procedures

The KMTC policies and procedures hold precedence over day to day activities at the KMTC. Cimarron policies and procedures hold precedence over decommissioning activities at the KMTC. It is the responsibility of both KMTC and Cimarron management to assure that there is as much consistency as possible.

4.2.8 Contingency Situations

In case of an emergency or an accident, the KMTC operations policies and procedures hold precedence.

4.3 QA/QC Responsibilities

4.3.1 Objective

The objective of the QA/QC function is to assure that data and records are maintained in accordance with applicable policies, procedures and license conditions are followed and that complete records of activities are maintained. Additionally, the QA Coordinator has responsibility for assuring that all decommissioning related survey data are reviewed in accordance with procedures and that the data meets the requirements for use.

4.3.2 Administration

QA/QC responsibility rests with the QA Coordinator. The QA Coordinator reports to the Vice President & Site Manager-Cimarron Corporation. KMCLLC and Safety and Environmental Affairs Division Management, the Vice President & Site Manager-Cimarron Corporation, or the QA Coordinator may request an audit of KMTC Decommissioning activities at any time.

4.3.3 Independent Audits

The Corporate Director of Regulatory Compliance has the responsibility to establish a routine independent audit and inspection of the KMTC Decommissioning activities. The independent audit is to generate a written report noting areas of compliance and deviation from policies, procedures, and license conditions and is to be submitted to the Vice President & Site Manager-Cimarron Corporation. The Vice President & Site Manager-Cimarron Corporation is to assure that a written response to the independent audit is prepared and that corrective actions have been achieved. The audits and corrective actions taken are to be kept on file and available for NRC during their inspections.

4.4 NRC/State of Oklahoma

4.4.1 NRC Site Inspections

The NRC, at any time, may inspect the facility and observe the activities occurring to achieve the decommissioning goal, assure that licensee activities are in compliance with NRC rules and license conditions, and comment on planned activities. Inspections may be announced or unannounced.

4.4.2 Coordination with State of Oklahoma

Copies of materials submitted to the NRC will be provided to the State of Oklahoma. Conversely, any letters from the licensee related to the decommissioning, to the State of Oklahoma will be provided to the NRC.

Figure 4.1

Kerr-McGee Corporation
Safety & Environmental Affairs Division
Hydrology, Geology & Remediation Department
(KM Technical Center Decomissioning Organization)

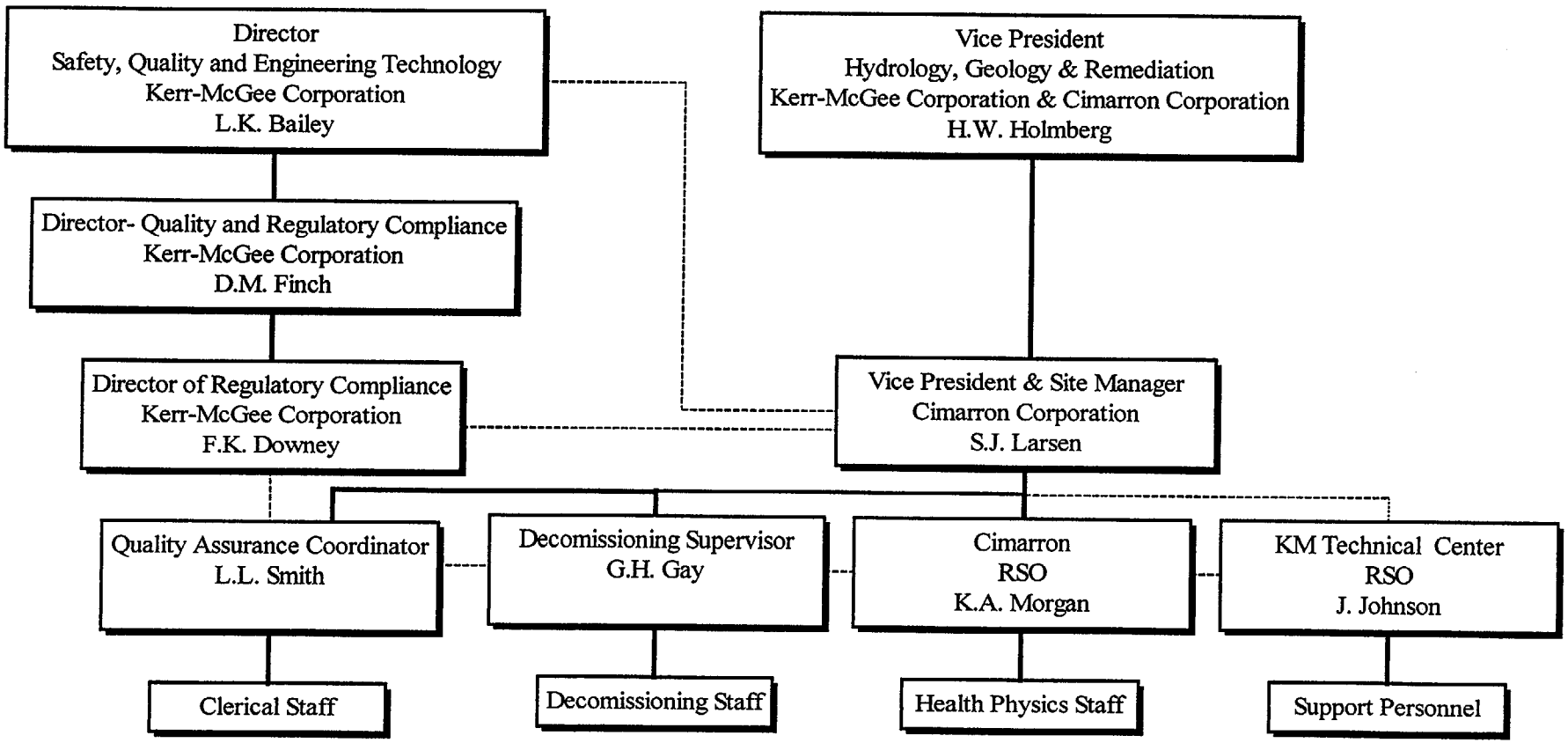

KERR-McGEE CHEMICAL LLC.	
FIGURE 4.1 KM Technical Center Decommissioning Organization	
PREPARED BY: DF	DWN BY: DF
DRAWING NO. KMTC-6	DATE: 03/09/00

5 Methods to Protect Health and Safety

5.1 Health Physics Program

The facility will utilize an established, written health physics program to assure there are formal responsibilities and methods for detecting radiation and keeping exposures to individuals "as low as reasonably achievable" (ALARA) during decommissioning activities. Oversight of these programs is provided by the RSO.

5.1.1 Personnel Protection

For decommissioning work in the Kerr-McGee Technical Center (KMTC) main building (i.e. the laboratories, sample preparation areas, and sample storage areas) decontamination workers will wear personnel protective equipment in accordance with facility health and safety (including OSHA) and Radiation Protection Program requirements. In general the only work anticipated in buildings is associated with surveys for final release. Should a significant amount of contamination be located, workers will wear personnel protective equipment as needed to comply with applicable special work permits (SWPs) and facility health and safety requirements.

For decommissioning work associated with the removal of materials and incidental contamination associated with the uranium calibration test pits, decommissioning workers will wear coveralls, safety shoes, and safety glasses with side shields, at a minimum. Gloves will be worn as needed when materials are physically being removed from the "tin-horns" and any ancillary excavations to remove incidental contamination. Hard hats will be worn when heavy machinery is in use.

If an analysis of a remediation activity suggests airborne contamination may be generated, the worker will be issued appropriate respiratory protection before the work is undertaken. The need for respiratory protection is addressed via the SWP documenting that the potential hazard has been evaluated (i.e., ALARA considerations) and proper precautions against unnecessary exposure have been taken.

5.1.2 Personnel Monitoring Devices

All individuals working with radioactive materials are required to wear a film badge. These badges are worn on the outside of the protective clothing between the neck and waist. The badges are exchanged at least quarterly and the individual's dose for the period recorded. Records of employee exposures are maintained on file at the Cimarron facility and are available for both employee and NRC review.

5.1.3 Work Area Monitoring Devices

Work areas will be monitored as necessary for the work being performed. During work requiring extensive remediation, such as the excavation and removal of the uranium calibration test pits, area air samplers may be placed in strategic up- and down-wind locations if required by work permits. Dust suppression will be utilized if required.

5.1.4 Ambient Exposure Monitoring

Routine μR surveys will be performed during decommissioning activities to ensure that regulatory dose limits are met.

5.1.5 Radiation Detection Instruments

5.1.5.1 Site Radiation Detection Instruments

Table 5.1 provides the Cimarron/ KMTC Radiation Monitoring Instruments available for use during KMTC Decommissioning activities.

5.1.5.2 Calibration Standards and Frequency

Established written policies and procedures address the use and calibration of survey equipment to be used in decommissioning activities. Each instrument is identified by serial number and records of its use and calibration are maintained on file. Calibration of all final release survey instrumentation shall be traceable to NIST standards.

5.1.6 ALARA Committee

5.1.6.1 Duties and Responsibilities of the ALARA Committee

All decommissioning activities are subject to review and oversight by an established ALARA Committee. The Committee will be comprised, as a minimum, of the Vice President & Site Manager-Cimarron Corporation, Cimarron RSO, KMTC RSO, and Decommissioning Supervisor. This committee will meet quarterly, at a minimum, and for reviewing special circumstances and exposures. An agenda and record of the ALARA Committee meetings will be maintained by the Cimarron RSO and be available for management and NRC inspection. The Cimarron RSO will set the quarterly agenda and can also call special meetings to review requests for special exposures or significant changes in procedures.

TABLE 5.1
CIMARRON / TECHNICAL CENTER RADIATION MONITORING INSTRUMENTS

INSTRUMENT TYPE	NUMBER AVAILABLE	RADIATION DETECTED	SCALE RANGE	BKG	TYPICAL EFFICIENCY	TYPICAL MDA 95% CONFIDENCE LEVEL
Scintillation (Ludlum 2224) Scaler/Ratemeter with 43-89 probe	2	Alpha Beta	0-500,000 cpm	< 10 cpm < 300 cpm	18% 14%	100 dpm/100 cm^2 500 dpm/100cm^2
Micro-R Meter (Ludlum 12 & 19) 1" x 1" NaI Detector	3	Gamma	0 – 5,000 µR/h	7 µR/h- 9 µR/h	N/A	2 µR/h
Ion Chamber (Victoreen)	1	Gamma	0.1 – 300 mR/h	<.0 1 mR/h	N/A	< 0.2 mR/h
3" x ½" NaI Scintillation (43-82) Digital Scaler (Ludlum 2220/2221)	3	Gamma	0 - 500,000 cpm	4,000 cpm avg. shielded 9,000 cpm avg. unshielded	N/A	300 cpm (Shielded) 500 cpm (Unshielded)
100 cm^2 gas flow (43-68) Digital Scaler (Ludlum 2220/2221)	2	Alpha	0 - 500,000 cpm	<10 cpm	20%	100 dpm/100 cm^2
100 cm^2 gas flow (43-68) Digital Scaler (Ludlum 2220/2221)	2	Beta, Gamma	0 - 10,000 cpm	<300 cpm	20%	600 dpm/100 cm^2
60 cm^2 gas flow (43-4) Digital Scaler	1	Alpha	0 - 500,000 cpm	<10 cpm	25%	200 dpm/100 cm^2
60 cm^2 Count Rate Meter (PRM-6)	7	Alpha	0 - 500,000 cpm	<100 cpm	13%	350 dpm/100 cm^2
50 cm^2 Personnel Room Monitor (Ludlum 177)	2	Alpha	0 - 500,000 cpm	<100 cpm	13%	500 dpm/100 cm^2
Tennelec LB5100 Computer Based Auto Sample Counter	1	Alpha Beta	0 - 99,999,999 cpm	<0.3 cpm 1.5 cpm	38% 42%	0.4 dpm 1.5 dpm
Soil Counter # 1 – Computer Linked 4" x 4" x16" NaI (Tl) Detector	1	Gamma	---	TBD	4% 15%	5 pCi/g Total U (5min. count) 0.6 pCi/g Th (Nat) (5min. count) 3 pCi/g Total U (15min. count) 0.3 pCi/g Th (Nat) (15min. count)
Soil Counter # 2 – Computer Linked 7" x 7" NaI Well Detector	1	Gamma	---	TBD	7.5% 87%	0.6 pCi/g Total U (5min. count) 0.06 pCi/g Th (Nat) (5min. count)
*Reuter-Stokes PIC Model RSS-112	1	Gamma	0 – 100 mR/h	9 – 10 µR/h	N/A	0.5 µR/h (10min. count)

*(Cushing Instrument available for Cimarron / Technical Center Use)

6 Final Radiological Status Survey

6.1 Overview

The final status survey will generally be performed in accordance with the guidance contained in NUREG/BR-0241[4] and MARSSIM[9]. Existing survey data from previous operational activities may be utilized as available after being reviewed in light of the guidance contained in NUREG/BR-0241[4] and MARSSIM[9].

6.2 Site Conditions At Time of Final Radiological Status Survey

Kerr-McGee expects that, at the time of the performance of the Final Radiological Status Survey, all remediation and decontamination efforts will have been completed (if required) and that final status survey documentation will demonstrate that the site meets the criteria for unrestricted release.

Figures 2.4 and 2.5 depict the indoor impacted building and laboratory areas where source material was utilized. Drawing TECHCNTR_006_REV_0 depicts the indoor survey units. Drawing TECHCNTR_004_REV_0 depicts the outdoor impacted areas subdivided into survey units. All of these indoor and outdoor impacted areas will undergo a final status survey.

6.3 Data Quality Objectives (DQOs)

The objectives of the Final Status Survey (FSS) and the quality constraints placed upon the data to be generated are as follows:

1. Survey objective: Determine whether the residual radioactivity in the survey unit is less than the release criteria in Section 3 as applicable.
2. Null hypothesis: Residual contamination in the survey unit is greater than the DCGLw.
3. Alternative Hypothesis: Residual contamination in the survey unit is not greater than the DCGLw.
4. Type I and Type II Decision Error Rates: These are the same and are initially specified as 0.05.
5. LBGR: This is initially equal to ½ of the DCGLw.

NOTE: Additional factors will be considered when deliberating selection of the default LBGR and Types I and II Decision Error Rates. These factors are presented below in Table 6.1.

Table 6.1

Factors to be Considered for Modification of Key Parameters

• Conservatism in derivation of the DCGL;
• The residual radioactivity concentration or area density range in the survey unit;
• Cost-benefit of additional remediation, measurement, analysis, and or reporting versus concentration, dose, and risk reduction;
• Physical distribution of residual contamination as it may affect remediation and logical survey unit boundary;
• Appropriate LBGR and gray region, Δ relative to background, variability in background, and multiple materials backgrounds in the survey unit;[22] increased α error may be tolerable when Δ is small in order to avoid an unreasonably large number of measurements;
• Difficult or adverse measurement conditions;
• Interference in measurements (e.g. ^{40}K interference in beta radiation measurement);
• Whether measurement error can be reduced reasonably;
• Health and Safety considerations.

6. The Minimum Detectable Concentration (MDC) for direct measurements and soil samples should be less than 50% of the relevant release criteria.
7. The MDC for scans should be less than the $DCGL_{EMC}$.
8. The desired relative shift (Δ/σ) should be between 1 and 3.

6.4 Final Status Survey Design Process

Final Status Survey (FSS) Designs will be prepared, reviewed and approved for each survey unit before the survey is conducted. Survey designs will be prepared in accordance with Sections 6.4.1 through 6.4.10 below:

6.4.1 Analyze Existing Data and Calculate Release Limits

Before the final status survey design process can begin, the designer must evaluate existing characterization data, historical records and the present condition of the site. Using this information, the designer will then calculate and justify the release limits as described in Section 3.

6.4.2 Identify, Classify, and Describe each Survey Unit.

For building surveys, the rooms, hallways, storage areas, etc. to be included in each survey unit will be identified. For land areas, the boundaries of each survey unit will be clearly identified in the applicable coordinate system. Each survey unit will be classified in accordance with MARSSIM[9] and NUREG 1505[22] criteria.

As a rule, all land area surface survey units will be located on the surface of the ground as it exists at the time of the FSS (i.e. prior to backfill of excavation). Surface soil samples taken in connection with the statistical grid pattern will be taken as composites from the surface to 0.15 meter below the surface grade. Soil samples taken at other depths and on the surface after restoration (i.e. after backfill of an excavation) will be considered biased sample locations.

A drawing or sketch of the survey unit will be prepared showing geographic placement of the impacted area or building, room layouts and numbering, location of impacted fixed equipment, survey unit ID, Class designation, and other information as needed. The total surface area of the survey unit will be stated with land areas provided in square meters and building areas provided in square feet.

The radionuclides of concern have been identified at the KMTC and are the radionuclides in the uranium and thorium series. The equilibrium status of the uranium and/or thorium series may be determined for each survey unit and used when developing the specific release criteria. The specific release criteria for the survey unit will be clearly stated in the plan.

The data from previous characterization or FSS equivalent surveys will be utilized when developing the FSSP. Any specific areas that have had FSS equivalent surveys will be delineated. Representative reference areas and/or reference materials that correspond to the materials found in the survey units will be selected. The mean and standard deviation of matrix-specific characterization and/or FSS equivalent data will be calculated and listed in the FSSP as applicable.

6.4.3 Select Representative Reference Areas or Reference Materials.

A significant amount of characterization work has been performed for various reference materials, however, it is possible that additional characterization will be required in order to satisfy the sampling criteria or to address additional reference materials. Additional characterization data for reference materials will be collected as required in non-impacted areas to the extent practicable and will be described in the FSSP.

6.4.4 Prescribe the Survey Methods and Instruments

The type of radiation to be measured and the type of instrument to be used will be stated along with measurement techniques and the survey count rate necessary to ensure that the DQO for the Minimum Detectable Concentration (MDC) is met.

6.4.5 Specify the Reference Coordinate System.

The coordinate system for land areas will originate at the southwest boundary corner of the KMTC property. X and Y coordinates will be specified in meters East and North, respectively. The coordinate system for the buildings will identify each data point by building, room, room surface (i.e. floor, wall, etc.) and X and Y coordinates measured in feet from a specified origin.

Affected fixed equipment located within each room at the time the Final Status Survey is performed will be identified. Survey locations associated with the statistical

grid pattern that fall on fixed equipment will be assigned to the surface beneath or behind the fixed equipment and it will be noted that the point fell on the fixed equipment.

Additional "bias" measurements that are taken on fixed equipment will be numbered and identified on the associated drawings as well as in the remarks section of the data collection forms.

6.4.6 Specify the Sample Collection Procedures

Samples will be collected and analyzed in accordance with existing procedures.

6.4.7 Determine the Data Collection Requirements for Statistical Tests

The relevant statistical tests will be selected and the number of statistical grid data points, their location and the associated grid size will be calculated using the guidance found in MARSSIM[9] and NUREG-1505[22]. For survey units containing material with similar background characteristics (e.g. soils), the Wilcoxon Rank Sum (WRS) Test is the preferred statistical test. For areas with matrix materials having widely disparate background characteristics (e.g. building and room surfaces), the Sign Test for Paired Data is the preferred statistical test.

In most instances, the number of data points required will be calculated using the Visual Sample Plan (VSP) program[24]. This software program enables the user to input the Type I and II error rates, the estimated standard deviation and the LBGR. The VSP[24] program then automatically calculates the number of samples required and graphs the power curve for both the WRS Test and the Sign Test. The VSP[24] program operates using MARSSIM[9] techniques and has been validated for use on this project.

Due to the fact that there may be some missing or unusable data for a given statistical survey, the rate of missing or unusable measurements, R, expected to occur in a survey unit or reference area, will be accounted for during survey planning. In order to assure that a sufficient number of data points are collected to attain the desired power level with the statistical tests and allow for possible lost or unusable data, the number of data points required will normally be increased by 20% (R=0.2), and rounded up, as practicable. In the event it is not practical to collect $1.2 \cdot n$ measurements, as few as n measurements will be acceptable without verification by a retrospective power curve.

The required number of measurements initially determined for a survey unit may also exceed reasonable bounds. In that event, the design process may be repeated utilizing more suitable values for α, β, and LBGR. Recalculation of the power of the test should be performed following modifications to critical parameters in order to ensure that the statistical tests continue to meet survey objectives.

In the event that a Class 1 survey unit area is considerably less than 15 m^2 or a Class 2 survey unit area is considerably less than 100 m^2, and the number of measurements required to satisfy the selected statistical test is unreasonably large, the measurement density may be adjusted to at least one measurement per square meter for a Class 1 survey unit or at least one measurement per 10 m^2 for a Class 2 survey unit. Under these conditions, the criterion for release shall be that every measurement in the survey unit does not exceed the $DCGL_W$.[23]

Once the required number of statistical survey points have been determined for a given survey unit, they will be arranged in either a rectangular or triangular grid pattern beginning with a randomly selected survey point. Grid spacing will be determined from the following equations:

$$L = \sqrt{\frac{A}{n}} \qquad \text{Rectangular Grid}$$

$$L = \sqrt{\frac{A}{0.866 * n}} \qquad \text{Triangular Grid}$$

where A is the total area of the survey unit and n is the number of survey measurements required in the survey unit.

The grid spacing as determined above shall be evaluated against the requirement that scanning instruments be able to detect activity values exceeding EMC levels in the areas between the systematic survey locations. The largest circular area which can be drawn, excluding any systematic survey locations, will be the area used to calculate the scanning EMC threshold value (i.e. $DCGL_{EMC}$). The $DCGL_{EMC}$ will then be compared to the MDC of the scanning instrument to be used for the survey. If the $DCGL_{EMC}$ is lower than the MDC, the spacing of the grid samples (L) will be accordingly. As the area between the survey points decreases, the $DCGL_{EMC}$ increases until it exceeds the MDC for the scanning instrument. At that point the survey designer will fix the dimensions of the grid pattern and specify the locations for all such data points.

6.4.8 Determine Bias Data Collection Requirements

In addition to the systematic grid survey points on building surfaces and outdoor areas, additional "bias" survey points will be utilized in areas where radioactivity is likely to be found. New equipment, walls and surfaces installed after the use of source materials were terminated are considered non-impacted and will be excluded from bias surveys.

The survey designer or survey technician will estimate the number of bias survey points required, especially in and around items of fixed equipment, using process knowledge, existing data and health physics "good practices." Bias survey points may be specified in advance in the FSSP or may be left to the discretion of the survey designer or technician.

The radioactivity on the interior surfaces of pipes, drain lines, or ductwork shall be determined by taking bias measurements at all traps and other appropriate access points, provided that contamination at these locations is likely to be representative of contamination on the interior.

Structural surfaces, equipment, or scrap which are likely to be contaminated but are of such size, construction, or location as to make the surface inaccessible for purposes of measurement shall be presumed to be contaminated in excess of the building release limits.

6.4.9 Specify Required Level of Beta/Gamma Scan Measurements

The FSSP will specify the extent to which scans will be performed in the survey unit for the purpose of locating elevated areas not detected by the grid and/or bias sample measurements. For building survey units, beta/gamma scans will be performed using scintillation and/or gas proportional detectors. On soil surfaces, beta/gamma scans will be performed using sodium iodide detectors. Directions for scanning (i.e. scan rate and elevation) will be described in the FSSP and will include the following:

Class 1 Areas. Surface scans will be performed over 100% of the survey unit surfaces and fixed equipment.

Class 2 Areas. Surface scans will be performed on at least 10% of structure surfaces and/or fixed equipment, and soil surfaces. (Generally, floors will receive 15% surface scans or greater, walls and ceilings less than 10%.)

Class 3 Areas. Surface scans will be performed covering 5% of Class 3 area surfaces and will address those areas identified as possible locations for biased measurements.

The FSSP will contain a floor plan or outdoor land area drawing for each survey unit. Scan locations will be specified on the drawing and identified by letters corresponding to those entered on the survey form.

6.4.10 Specify Contingency Action

If the scan threshold specified in the FSSP is exceeded in the field, the survey technician will confirm the high scan reading with direct β/γ readings and/or samples and will attempt to determine the size of the impacted area. All scan readings in excess of the scan threshold specified in the FSSP will be confirmed with direct readings and/or samples.

Survey forms used for the collection of the data in the field will be included in the FSSP. Normally these survey forms will be filled out in the field, reviewed by the Quality Assurance Coordinator or designee, and forwarded to the data analyst assigned to review the data. In the event that the data indicates that excessively high scan readings have been recorded, the survey designer and/or analyst will provide direction regarding additional characterization and/or remediation requirements.

6.5 Final Status Survey Instrumentaion

The instrumentation utilized to generate the FSS data will be maintained in accordance with the Cimarron Radiation Protection Program procedures. These procedures utilize the guidance contained in ANSI N323-1978, "Radiation Protection Instrumentation Test and Calibration"[17]. As specified by the Cimarron procedures for instrumentation, requirements include traceability of calibrations to NIST standards, field checks for operability, background radioactivity checks, operation of instruments within established environmental bounds, training of individuals, scheduled performance checks, calibration using isotopes of energies similar to those to be measured, quality assurance tests, data review, and record-keeping.

Portable survey instruments are calibrated on at least a semi-annual basis. Where applicable, activities of sources utilized for on-site calibration are corrected for decay. In

addition to the periodic calibration requirements, source response checks are performed on a daily basis for all instruments being utilized FSS work.

All calibration and source check records are completed, reviewed, signed-off and retained in accordance with the Cimarron Quality Assurance Program[18].

A complete listing of the instrumentation available to the KMTC program is presented in Table 5.1. More detailed descriptions of the equipment to be used for performance of the FSS is presented in this section.

6.5.1 Unshielded 3" x 0.5" NaI Gamma Detector

The 3" x 0.5" detector is a sodium iodide (NaI) crystal gamma detector that is unshielded around all sides. The NaI detector is paired with a portable scaler/ratemeter that has single channel analyzer capability. Americium-241, Uranium-235, and Natural Thorium sources are utilized to set the instrumentation window and threshold to detect gamma energies in the range of 50 to 250 keV. This energy range corresponds to the energies of interest when surveying for natural uranium and thorium contamination. The instrument is normally operated in the window "out" mode, meaning that the instrument response is for the entire range of detectable energies. This instrument may be used for indoor building surveys or for surveys in unaffected areas.

6.5.2 Shielded 3" x 0.5" NaI Gamma Detector

The shielded 3" x 0.5" detector is a NaI crystal gamma detector that is shielded with lead around the top socket and sides to improve the directional sensing capabilities of the equipment. Similar to the unshielded detector, the shielded detector is utilized with a portable scaler/rate meter that has single channel analyzer capacity. This instrument is normally utilized in areas where background may be elevated, such as affected outdoor areas.

6.5.3 Micro-R Meters

The Micro-R meter is used to determine the exposure rate in an area. When correlated with a calibrated pressurized ion chamber, the Micro-R meter may be used as a quantitative dose rate instrument. The Micro-R meter will not be used to determine release status, since the DCGLw values incorporate ambient dose rate.

6.5.4 Gross Alpha/Beta and Beta/Gamma Detector

Surface activity measurements for both gross alpha-beta and beta-gamma can be obtained using a Ludlum Model 2221 with a Model 43-68 gas proportional detector, or equivalent scintillation type (e.g., Ludlum Model 43-89). Gross alpha surface measurements can be obtained using an Eberline Model PRM-6 with an Eberline Model AS-15 detector.

6.5.5 Soil Counter (Gamma Spectroscopy)

The Cimarron Soil Counter System #1 consists of a 4" x 4" x 16" sodium iodide crystal housed in a shielded chamber which is computer linked to a multi-channel analyzer (MCA). The counting system determines concentrations of Total U, Total Th, and Ra-226. Cimarron's counting system is programmed to determine the total uranium present in the soil sample by calculating the U-234 activity based upon the U-235 activity

measured in the soil sample. The U-234 and U-235 activities are summed with the detected U-238 activity to obtain the total uranium activity. The counter also adjusts for system background. Calibration of this counting system is performed annually and is traceable to NIST standards through contractor laboratory evaluations of the on-site standards. Cimarron is also in the process of validating Soil Counter System #2 which consists of a of a 7" x 7" sodium iodide crystal well detector housed in a shielded chamber and computer linked to a multi-channel analyzer (MCA). The KMTC confirmatory samples collected during the February 6-7, 2001, NRC confirmatory survey for the uranium test pit area were analyzed with Soil Counters #1 and #2 as part of this validation process.

Established quality assurance measures for the soil counter include Cesium-137 centroid checks, Chi-square tests, background determinations, and the counting of soil standards. All of these quality assurance controls are recorded on control charts and are trended on a continuing basis.

Standards used for calibration and quality assurance checks for the soil counter have been analyzed by outside laboratories and are NIST traceable through these analyses. Comparisons have been made between the standards as counted using the soil counter and two off-site laboratories. The assigned values for the standards are the average of the results obtained from the off-site laboratories, when the standards were analyzed by more than one laboratory.

Total uranium, natural thorium, and Ra-226 activities in soil are determined based upon the evaluation of net counts from the soil counter. Activities are calculated through the use of efficiency and correction factors obtained using appropriate standards. Soil concentrations are calculated by dividing the net activity by the soil mass. Soil masses are determined on a laboratory scale which is checked on a daily basis (when in use) utilizing NIST traceable standards.

ORISE has been used by the NRC from time to time for verification of the decommissioning work completed to date at the Cimarron site. ORISE has conducted an evaluation of the Cimarron Soil Counting system's ability to measure accurately total uranium concentrations in soil samples. This was done by comparing ORISE sample analysis results obtained by gross alpha pulse height analysis and gamma spectroscopy with the results obtained from the use of the Cimarron Soil Counter. As a result of this evaluation, ORISE has determined that ORISE and Cimarron analysis results compare favorably. NRC inspection Report #70-925/97-02[19] stated that "no significant bias or statistical errors between the licensee's soil results and the NRC's results were identified."

Two of the more recent inspections by the NRC also confirmed Cimarron's Soil Counting system's ability to accurately measure total uranium concentrations in soil samples. On September 24, 1998, the NRC collected twelve (12) soil and sediment confirmatory samples from the Cimarron site. The samples were first counted on the On-Site Counter by Cimarron and then shipped by the NRC inspector to the NRC Region III laboratory for analyses. The November 3, 1998 Inspection Report No. 70-925/98-02[20] stated "No significant bias or statistical errors between the licensee's soil and sediment sample results and the NRC's results were identified. Licensee measurement methods and counting times were found to be acceptable." The NRC's September 14, 1999

Inspection Report No. 70-925/99-01[21], stated "The results of the 12 NRC soil samples were found to be consistent with the licensee sample results."

6.6 Evaluation of Final Status Survey Results

The evaluation of the FSS results involves a number of steps that include: review of the DQOs and survey design; initial verification of the data; analysis and validation of the data; response to elevated measurements; the performance of statistical tests; and documentation of results. These steps are described below and provide the framework that allows for a complete assessment of the survey data, provides an investigation mechanism for problems encountered in survey units, and enables the user to draw final conclusions that are well documented.

6.6.1 Review and Approval of the Survey Design

All Final Status Survey Plans (FSSPs) used in the KMTC Decommissioning Project will be prepared in accordance with the decommissioning plan (specifically Section 6) as approved by the NRC. Each FSSP will be reviewed and approved prior to being implemented.

Specific items to be checked during the review process are:

- Verify the survey design and ensure the number of samples obtained are appropriate.
- Verify whether the DQOs have been modified from the default values. If so, then ensure appropriate justification exists for any departure.
- Verify that the direct measurement MDC is less than 50% of the release limit.
- Verify that the scan MDC is less than $DCGL_{EMC}$.

Any changes to the FSSPs will be issued as approved revisions.

6.6.2 Initial Data Verification

Data verification involves the comparison of the collected data with the prescribed activities documented in the FSSPs. All data collected in the field will be submitted to the Quality Assurance Office in accordance with the applicable procedures.

The QA Coordinator is responsible for the initial screening of the incoming data to ensure that FSSP requirements have been fulfilled and that the data have been legibly and accurately recorded. This review should include the following:

- Evaluate the completeness of the forms and data tables.
- Verify records of instrument calibration.
- Verify records of survey technician training qualifications.
- Make an assessment of the overall quality of the data. This should involve a check to identify gross errors in data recording.
- Verify that sample logs indicate that samples were obtained in the correct locations per the FSSP.

The QA Coordinator is also responsible for the accurate transcription of the survey data from paper records into the project's database. Some of the validation required (e.g. calibration of equipment or training of the surveyor) will be performed automatically

within the database. After the data has been entered into the database, the QA Coordinator or designee will prepare a reviewer's data package to be used for validation and analysis. This package may include copies of field data sheets, tables of survey and/or background data, graphical representations of the data set (e.g. frequency plots or map plots), and/or basic statistical calculations on the data set.

The QA Coordinator will maintain the permanent archive files of all FSS data taken in connection with the project.

6.6.3 Data Validation and Evaluation

6.6.3.1 Data Review and Lock.

Data validation involves the comparison of the collected data to the documented DQOs. Once the FSS data has been verified, transcribed and filed by the QA, it will be reviewed by a technical analyst assigned to the technical evaluation committee (TEC) described in section 6.8.1. This examination will determine if every data point taken in the survey unit is suitable for FSS and will check for the following items:

- The number of points taken are in accordance with the specific FSSP requirements.
- The location of regular grid points correspond to what was prescribed in the FSSP.
- If some locations were inaccessible and the field team substituted additional grid points, this review will assess their adequacy for use in the statistical calculations required by MARSSIM[9].
- Scan data have been adequately processed. Scan data sheets will be reviewed to determine that any high readings have been adequately verified with direct confirmatory measurements.
- Bias data points were taken in accordance with FSSP instructions and their locations accurately documented on drawings and in the database.

If, during the technical review, any measurements are considered doubtful, additional measurements may be taken and added to the data package.

Upon completion of this technical review, the analyst will direct that the records in the database be "locked" to finalize the data package. Once this step has been completed, the data package is deemed an accurate picture of the survey unit as it was initially surveyed.

6.6.3.2 Data Screening Tests.

After being "locked," the data set for the survey unit will then be evaluated using screening software for the following comparison tests:

Data Screening Tests
Min/Max Test
Background Screen
DCGLw Screen
DCGLavg Test
EMC limit Screen

Data Screening tests that are labeled "Screen" will compare each individual data point with a specified threshold and will flag the data point if it fails. In addition, if any one data point in the survey unit fails the screening test, the survey unit as a whole will also fail the test. Other tests apply only to the survey units as a whole and are described below:

Min/Max Test: All the recorded data points in the survey unit will first be evaluated to determine the difference between the largest survey value and the smallest applicable background value. If the difference is less than the DCGLw, a Class 1 or Class 2 survey unit will be classified as clean (i.e. passes the test) and no further computations will be required.[25] A class 3 survey unit that passes will be further evaluated under the Background Screening test.

If a Class 2 or Class 3 survey unit fails the Min/Max test, it will be evaluated and recommended for either reclassification, remediation or further analysis. A Class 1 survey unit that fails this test will be further evaluated under the remaining tests.

Background Screening. All Class 3 survey units will be evaluated using this test. Each survey data point will be compared with the threshold specified in Table 6.2 and, if it fails the test, it will be flagged as an exception. In Class 3 survey units, no residual contamination is expected. Therefore, investigation levels are set to flag measurements that are just above the range expected for background levels or just above detection limits for the measurement method, whichever is greater.

Elevated Measurement Comparison (EMC) Screening. For Class 1 survey units, measurements above the DCGLw are expected, so a special derived concentration guideline for elevated measurements, $DCGL_{EMC}$, will be calculated for this test. The value for $DCGL_{EMC}$ used for this screening test will be determined from the area rule applied to the area of the largest circle that can be drawn centered about a single grid point in the grid array without including any adjacent grid points.

All the survey points within the survey unit will be compared with the $DCGL_{EMC}$ in accordance with Table 6.2. Reference levels for each data point will be background measurements associated with the same Matrix Code. All values exceeding EMC criteria will be flagged as exceptions.

DCGLw Limit Screening. In Class 2 survey units, measurements of net levels above the DCGLw are not expected. Therefore, investigation levels are set to flag measurements exceeding the DCGLw on a net basis. All the survey points within the survey unit will be compared with the DCGLw in accordance with Table 6.2. Reference levels for each data point will be background measurements associated with the same Matrix Code. Data points that fail the test will be flagged as exceptions.

Table 6.2

Final Status Survey Screening Tests

Data Screen	Building Surfaces & Fixed Equipment	Soil Samples
Background	Fail if: Gross $\beta/\gamma >$ max of $(\bar{x}_{ref}{}^{a} + 2\sigma_{ref})$ or MDA	Fail if: Specific Activity $> (\bar{x}_{ref}{}^{a} + 2\sigma_{ref})$
EMC[b]	Fail if: Gross $\beta/\gamma > (DCGL_{EMC} + \bar{x}_{ref}{}^{a} + 2\sigma_{ref})$	Fail if: Specific Activity $> (DCGL_{EMC} + \bar{x}_{ref}{}^{a} + 2\sigma_{ref})$
DCGLw	Fail if: Gross $\beta/\gamma > (DCGL_{W} + \bar{x}_{ref}{}^{a} + 2\sigma_{ref})$	Fail if: Specific Activity $> (DCGL_{W} + \bar{x}_{ref}{}^{a} + 2\sigma_{ref})$

[a] $\bar{x}_{ref}{}^{a}$ and σ_{ref} are the mean and standard deviation of the reference or background measurements calculated from measurements.

[b] The value for $DCGL_{EMC}$ used for this screening test will be determined from the area rule applied to the area of the largest circle that can be drawn centered about a single data point in the grid array without including its neighboring points.

DCGLavg Test: The average value for all the survey readings will be compared to the average of all the applicable background readings. If the difference is greater than DCGLw, the survey unit fails the test. When a survey unit (Class 1 only) contains individual data points which exceed DCGLw, the survey unit may still be released provided that it passes this test and the applicable statistical test.[25]

The screening software will enter an exception code in each record for those data points that fail any of the screening tests. A description of all the exceptions can also be provided by the screening software for subsequent analysis and review, if required.

A flow chart which describes the logic behind the application of the above tests is presented in figure 6.1.

6.6.3.3 Statistical Tests.

Class 1 survey units which fail the Min/Max Test criteria may still be released provided the survey unit can be shown to meet certain statistical tests. The analyst can process the data points in the survey unit by selecting and using one of the following tests that is most appropriate to the survey unit:

Statistical Tests
Wilcoxon Rank Sum Test (WRS)
Sign Test for Paired Data
Sign Test

Wilcoxon Rank Sum (WRS) Test. Also called the "Two-sample Wilcoxon Rank Sum Test", it should be used when there is background radiation present and the background characteristics are homogeneous for the materials present in the survey unit. The WRS test assumes that the background reference area and survey unit data distributions are similar except for a possible shift in the medians. This test will be preferred for land areas being evaluated by soil sampling.

Sign Test for Paired Data. This test should be used when the background materials differ significantly within the same survey unit. This test will be the most common test used within buildings because of the wide variety of matrix materials present.

Sign Test. Also called the "One-sample Sign Test," this test should be used when background is so low as to be undetectable. The Sign test evaluates whether the median of the data is above or below the DCGL. This test is really a special case of the Sign Test for Paired Data where background is defined as zero.

A detailed description of the above tests can be found in MARSSIM[9], NUREG 1505[22], and in a variety of statistical texts. If the survey unit passes the applicable Statistical Tests listed above, it conforms to the applicable release criteria. If the survey unit does not pass the applicable Statistical Tests listed above, remedial action and/or re-sampling may be required and will be performed as necessary.

6.7 Documentation of Final Status Survey Results

When a survey unit passes all required tests for release the data package will be utilized to complete the Final Status Survey Report (FSSR) for the survey unit. The FSSR will describe all results of the FSS and will be submitted to the NRC in conjunction with a license amendment request to release the survey unit from License SUB-986[1].

6.8 Final Status Survey Administration and Control

The Final Status Survey for KMTC will be controlled and administered to ensure that the results are accurate, secure, and available to authorized personnel and that the work is done in a safe and secure work environment. Special Work Permit (SWPs) and Work Plans (WPs) will be developed and approved prior to commencement of the field work required for the FSS and will specify the type of instrumentation to be utilized in performing the FSS. These SWPs and WPs are an integral part of the radiation protection and quality assurance program. Project organization and responsibilities, which are a part of the quality assurance program, are discussed below:

6.8.1 Project Organization

The FSS will be conducted under the direction of the Cimarron Radiation Safety Officer (RSO), who will be assisted by the KMTC RSO and supported by a team consisting of qualified site and contractor personnel from the Cimarron Facility and KMTC. The Vice-President & Site Manager – Cimarron Corporation will assure that all policies and procedures either in place or developed for the FSS meet license and/or decommissioning requirements.

The collection of data, excavation, remediation, and transportation activities will be conducted under the direction of the Cimarron Decommissioning Supervisor. The Cimarron Decommissioning Supervisor will also be responsible for generating applicable SWP and Work Plans (WPs).

Data verification will be performed by the Cimarron QA Coordinator who will also be responsible for data entry and maintenance of the authorized data files.

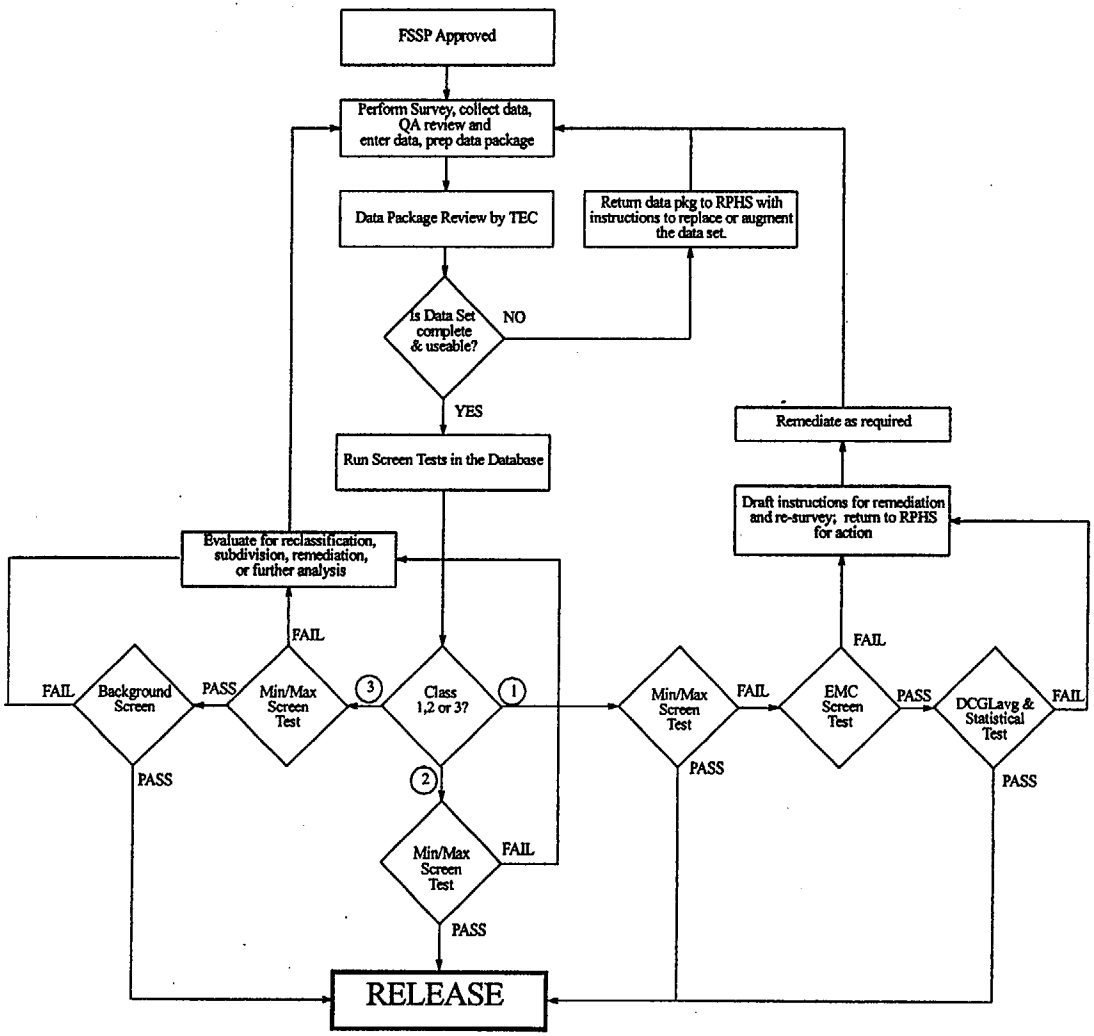

Figure 6.1

FSS Data Evaluation Process

A Technical Evaluation Committee (TEC) Chairman appointed by the Cimarron RSO will be responsible for drafting FSS Plans, validating and evaluating the survey results, making recommendations to the RSO regarding release or remediation, and producing feeder reports for each survey unit. The chairman will designate qualified analysts as members of the committee who will perform those tasks.

6.8.2 Training

Training will be provided to site personnel and any other personnel (i.e., contractors, visitors, etc.) who are allowed access to site areas undergoing decommissioning. All members of the FSS team will attend an in-house training session on any SWP and WP prior to commencement of work. All applicable FSS plans, procedures and quality assurance requirements will be reviewed during this training session.

6.8.3 Radiation Protection Program

The Kerr-McGee Technical Center (KMTC), through Cimarron Corporation will maintain a radiation protection program that meets and/or exceeds all of the applicable regulatory requirements. All final radiological status surveys will be performed in strict compliance with applicable regulatory and internal requirements. The goal of the KMTC decommissioning effort is to conduct all operations at a level of excellence that exceeds regulatory requirements. Qualified site and/or contractor personnel from the Cimarron Facility will exercise appropriate radiation protection precautions throughout the final radiological status survey process.

Independent Kerr-McGee Corporate audits for regulatory and internal requirements are conducted on a periodic basis and include the review of the Cimarron Radiation Protection Program and associated programs. Assessments of program effectiveness are also performed periodically by the Cimarron RSO. Additionally, NRC Region IV and NRC Headquarters staff inspect the Cimarron Radiation Protection Program for compliance with applicable rules and regulations.

6.8.4 Quality Assurance Program

The KMTC decommissioning project will utilize the Cimarron Corporation Quality Assurance Program (QAP)[18] which is an integral part of the Cimarron Radiation Protection Program. A principal component of the QAP[18] is the confirmation of the quality of the final radiological status survey by assuring that all tasks are performed in a quality manner by qualified personnel. The QAP[18] ensures that samples are collected, controlled, and analyzed in accordance with applicable quality controls to provide confidence in the resulting data accuracy and validity. The QAP[18] is structured to ensure that data generated can be verified through independent review.

The Cimarron QAP[18] is implemented and maintained in accordance with written policies, procedures, and instructions. This Program is administered under the

direction of the Quality Assurance Coordinator. Periodic surveillance and reviews are conducted to ensure that all aspects of the Program are addressed.

Written plans/procedures designated as SWPs and WPs, are prepared, reviewed and approved for activities involved in performing the final radiological status survey to ensure that the types of surveys to be performed, samples to be collected, frequency of sample collection and type of instrumentation required are designated.

The selection, calibration and use of radiation detection instrumentation used for final radiological status surveys are directed by both the Cimarron and KMTC RSOs. The Cimarron RSO is responsible for instrument calibration performed by Cimarron Health Physics staff or by contract services.

Radiological soil sample analysis performed by Kerr-McGee will be in accordance with written procedures and QA/QC protocols. Field data are gathered and maintained in logs for all samples in accordance with the Cimarron QAP[18]. Necessary data are transferred to the on-site laboratory sample log when the sample is brought to the on-site laboratory for analysis. The sample logs provide a record of sample collection, transport (chain of custody), and are maintained as facility quality assurance records.

In addition, off-site independent radiological analysis of split samples (samples are first counted on-site and then are sent to an off-site independent laboratory) is an integral part of the Cimarron QAP[18]. Samples sent to an off-site independent laboratory for analysis are accompanied by a chain of custody form in accordance with the Cimarron QAP[18]. These forms provide documentation for all aspects of sample control and are maintained as quality assurance records.

The data review process verifies that approved QA/QC procedures have been followed. When and if identified, corrections to recognized deficiencies are performed in accordance with the QAP[18].

6.9 Petition For Unrestricted Use and Termination of License SUB-986[1]

The petition for unrestricted release and license termination will be submitted in accordance with requirements contained in NUREG/BR-0241[4] for Type III research facilities. KMCLLC may request that the western portion of the licensed site be released for unrestricted use prior to license termination in support of the Oklahoma Department of Transportation's plans to widen Highway #74.

7 Schedule of Decommissioning Activities

7.1 Task Projections

The schedule for decommissioning is presented in Figure 7.1 on a Gantt chart. The project schedule has already commenced in accordance with NRC letter dated September 12, 2000 and reflects the current project milestones.

Kerr-McGee Technical Center
Decommissioning Schedule

Fig. 7.1

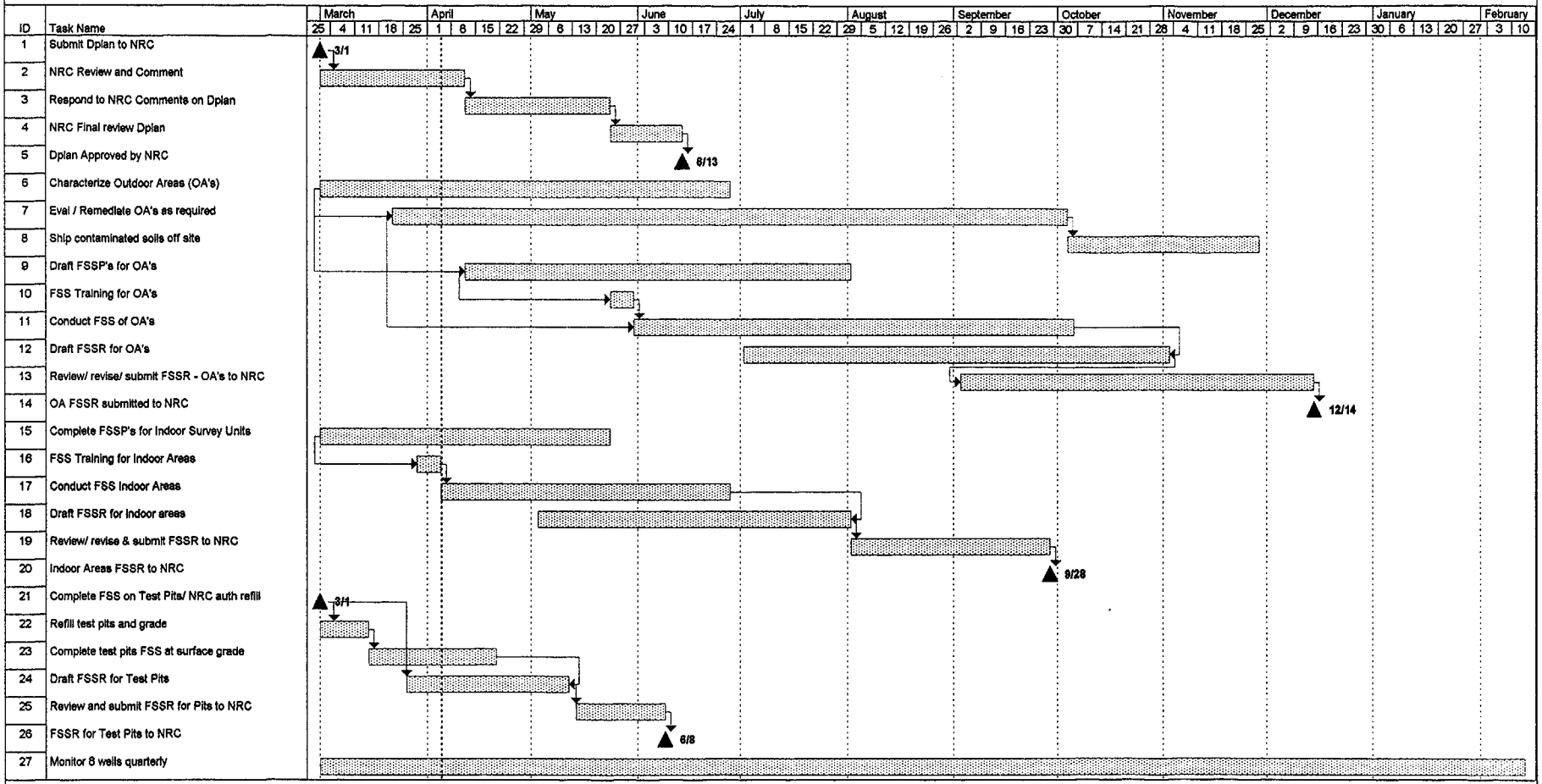

NEXTEP

Thu 4/5/01 3:15 PM

8 Decommissioning Funding

8.1 Decommissioning Estimate and Surety Provisions

Source Material License No. SUB-986[1] authorizes the Kerr-McGee Technical Center to possess up to 250 kg, 150 Kg and 25 kg of uranium (natural), thorium (natural) and uranium (depleted), respectively. The authorized uses for these materials include research and development, purification process development, and calibration of instruments. Further discussion of the license and the authorized materials is provided in Section 2.0 of this Decommissioning Plan. There is no depleted uranium or natural thorium (other than as low levels of residual contamination) at the facility. The majority of the source material was contained in the uranium calibration test pits with the remaining residual radioactivity being associated with other areas of the facility. The estimate of source material present on-site prior to excavation and removal of the uranium calibration test pits is approximately 300 pounds (91 mCi) of uranium (natural).

The Technical Center, currently under the administration and operation of KMCLLC, is projected to continue operations after removal of the source material from the uranium calibration test pits, decontamination of any authorized use laboratories, support facilities, and adjacent land areas, and termination of the license. The history of operations shows that contamination events involving source materials were infrequent and that any such contamination events were rapidly cleaned up. Further decontamination efforts associated with decommissioning activities are not expected to be significant and should be within the general costs associated with the current operation of the facility.

Therefore, surety for facility decommissioning rests principally with 1) The liability of removing the source materials from the uranium calibration test pits, shipping them to secure and authorized disposal, and return of the uranium calibration test pit area to non-impacted status; and 2) Surveying the properties and buildings and the removal or decontamination of areas or equipment. A significant portion of these costs are associated with the required fee to the Central States Compact and the transportation and disposal of the materials at the Envirocare Facility in Clive, Utah. The uranium calibration test pits and associated impacted soils have already been excavated and are currently awaiting shipment to Envirocare as allowed by NRC Region IV letter dated September 12, 2000 and the export permit is in place.

NRC regulations at 10 CFR 40.36[8] establish assured funding requirements for the completion of decontamination, decommissioning and unrestricted license termination for licensed facilities. A funding plan must be submitted and contain the following:

a. A site-specific cost estimate for decommissioning.

b. A description of the method(s) of assuring funds for decommissioning.

c. A description of the methods that will be used to adjust the site-specific cost estimate periodically over the life of the facility to assure that adequate funds are available.

In accordance with 10 CFR 40.36[8], Financial Assurance and Record-keeping for Decommissioning, Kerr-McGee provided surety in 1990 in the amount of $750,000 to cover decommissioning of the facility. This surety was based upon the presence of the source materials in the uranium calibration test pits as they contained the majority of the source materials present on the property at that time.

This document provides KMCLLC's site-specific cost estimate for decommissioning of the Technical Center facility areas that may have been impacted by licensed source material activities. The uranium calibration test pit area (i.e. five (5) specially designed vaults containing uranium ore) has already been decommissioned as allowed by NRC Region IV letter dated September 12, 2000. Laboratory and support areas within the Technical Center facility where research and development activities were performed were routinely surveyed and contamination, if present, was immediately addressed. These laboratory and support areas have been surveyed where contamination incidents were known to have occurred and may undergo minor decontamination efforts to meet the applicable release limit. Land areas adjacent to the Technical Center buildings have also been surveyed and are also expected to require decontamination efforts to meet the applicable release limit.

As the uranium calibration test pit area has already been decommissioned, adjustments to the site-specific cost-estimate are not anticipated.

Table 8.1
Kerr-McGee Technical Center Cost Estimate

Assumptions:

KMTC Center D-Plan re-submitted to NRC Region IV in 1st QTR 2001
Utilize Cimarron Personnel & RPP for all Characterization, Remediation and FSS work at KMTC
KMTC Decommissioning activities completed in 2001
KMTC License Terminated by NRC in 2002
Budget Estimate includes Contractor and Kerr-McGee Costs

2nd QTR 2001	Kerr-McGee	Contractor
Respond to NRC comments on D-Plan / D-Plan approval from NRC	$ 6,009.00	$ 9,992.00
Prepare and submit FSSR for the Test Pit Area to NRC	$ 4,200.00	$ 4,200.00
Complete Characterization of all other outdoor areas (surface/subsurface)	$ 29,338.00	$ 53,866.00
Finalize FSSP for all indoor areas	$ 2,842.00	$ 2,332.00
Train Individuals for Final Status Survey of all indoor areas	$ 2,842.00	$ 3,200.00
Perform FSS of all indoor areas	$ 18,024.00	$ 62,312.00
Well Water Monitoring (Assume Quarterly x 8 samples from 8 wells)	$ 1,020.00	$ -
Sample analysis / survey results / laboratory costs (on-site)	$ 1,200.00	$ -
Laboratory costs - water samples only (off-site)	$ 1,000.00	$ -
QA/QC	$ 2,800.00	$ 1,800.00
NRC Interface	$ 1,200.00	$ 1,800.00
Total 2nd QTR 2001	**$ 70,475.00**	**$139,502.00**

3rd QTR 2001		
Finalize FSSP for all other outdoor areas	$ 4,400.00	$ 4,200.00
Train Individuals for Final Status Survey of all other outdoor areas	$ 1,200.00	$ 1,800.00
Perform FSS of all outdoor areas	$ 2,437.00	$ 14,888.00
Remediate Outdoor areas as required	$ 27,769.00	$ 44,855.00
Compact Export Permit Fee	$ 56,000.00	$ -
Prepare and submit FSSR for all indoor areas to NRC	$ 2,200.00	$ 20,470.00
Well Water Monitoring (Assume Quarterly x 8 samples from 8 wells)	$ 1,020.00	$ -
Sample analysis / survey results / laboratory costs (on-site)	$ 1,200.00	$ -
Laboratory costs (off-site)	$ 1,000.00	$ -
QA/QC	$ 3,200.00	$ 2,800.00
NRC Interface	$ 5,159.00	$ 5,544.00
Total 3rd QTR 2001	**$ 105,585.00**	**$ 94,557.00**

4th QTR 2001

Package, ship and dispose of contaminated materials off-site	$ 4,460.00	$ 39,511.00
Complete FSS of all outdoor areas	$ 11,654.00	$ 48,886.00
Prepare and submit FSSR's for all outdoor areas to NRC	$ 8,653.00	$ 22,174.00
Well Water Monitoring (Assume Quarterly x 8 samples from 8 wells)	$ 1,020.00	$ -
Sample analysis / survey results / laboratory costs (on-site)	$ 1,200.00	$ -
Laboratory costs (off-site)	$ 1,000.00	$ -
QA/QC	$ 2,200.00	$ 1,800.00
NRC Interface	$ 4,338.00	$ 5,142.00
Total 4th QTR 2001	**$ 34,525.00**	**$117,513.00**

Year 2002

Well Water Monitoring (Assume Quarterly x 8 samples from 8 wells)	$ 4,080.00	$ -
Project Management	$ 6,400.00	$ 8,800.00
Sample analysis / survey results / laboratory costs / data review (on-site)	$ 4,800.00	$ 4,840.00
Laboratory costs (off-site)	$ 2,200.00	$ 8,800.00
QA/QC	$ 3,440.00	$ 3,922.00
Health Physics Support	$ 3,600.00	$ 8,544.00
NRC Interface	$ 11,912.00	$ 15,908.00
Total 2002	**$ 36,432.00**	**$ 50,814.00**

Totals by Year

Year 2001	**$ 210,585.00**	**$351,572.00**
Year 2002	**$ 36,432.00**	**$ 50,814.00**
Total for Years 2001 through 2002	**$ 247,017.00**	**$402,386.00**
Total	**$ 649,403.00**	
15% Contingency	**$ 97,410.45**	
Grand Total	**$ 746,813.45**	

INTERNAL CORRESPONDENCE

Safety & Environmental Affairs Division
APR 20 2000
Remediation Department

RISK MGMT. (UNIT)	TO Jess Larsen	DATE	April 19, 2000
	FROM Stacy Roberts	SUBJECT	Tech Center-- Financial Assurance NRC License #SUB 986

Attached are the following documents which provide evidence of financial assurance as outlined in NRC License No. SUB 986:

- Certificate of Financial Assurance
- Certificate of Decommissioning Insurance
- Standby Trust Agreement
- Decommissioning Endorsement

All of the attached documents are still in full force and effect. Please let me know if you have any questions.

sr/attachments

CERTIFICATE OF FINANCIAL ASSURANCE

Principal: Kerr-McGee Corporation
Kerr-McGee Center, T-606
Oklahoma City, Oklahoma 73102

NRC License Number: SUB 986
Name: Kerr-McGee Corporation
Address of Facility: 3301 N. W. 150th St.
Oklahoma City, OK 73134

Mailing Address: Kerr-McGee Center, T-606
Oklahoma City, OK 73102

Issued to: U. S. Nuclear Regulatory Commission

This is to certify that Kerr-McGee Corporation is licensed to possess source material in the following amounts

Natural Uranium in any form in the amount of 250 kilograms
Natural Thorium in any form in the amount of 150 kilograms
Uranium (depleted in U-235) in any form in the amount of 25 kilograms,

and that financial assurance in the amount prescribed by 10 CFR Part 40, $750,000 has been obtained for the purpose of decommissioning.

ATTEST:

By: Don Hager
Don Hager
Ass't. Secretary

KERR-McGEE CORPORATION

By: Kenneth J. Richards
Kenneth J. Richards
Vice President

Date: 6/29/90

CERTIFICATE OF DECOMMISSIONING INSURANCE

K-M INSURANCE COMPANY, the "Insurer", of Oklahoma City, Oklahoma hereby certifies that it has issued decommissioning insurance to Kerr-McGee Corporation, the Insured, covering the cost of decommissioning in accordance with 10 CFR Part 40.

The coverage applies to decommissioning costs associated with materials authorized by License Number SUB-986 issued to the Insured by the Nuclear Regulatory Commission (NRC). The coverage has been issued in connection with the Insured's obligation to demonstrate financial responsibility under 10 CFR Part 40.

The Limit of Coverage is $750,000.

The coverage is provided by endorsement to Policy Number GAL 89 1001-99 issued on July 1, 1990. The effective date of said policy is July 1, 1989. Policy is continuous until cancelled.

The insurance afforded with respect to such decommissioning is subject to the terms and conditions of the policy, provided however, that any provisions of the policy inconsistent with subsections (a) through (d) of this Paragraph are hereby amended to conform with subsections (a) through (d)

(a) Bankruptcy or insolvency of the insured shall not relieve the Insurer of its obligation under the policy to which this endorsement is attached

(b) The Insurer is liable for the payment of amounts within any deductible applicable to the policy, with a right of reimbursement by the insured for any such payment made by the Insurer

(c) Cancellation of this endorsement, whether by the Insurer or the Insured, will be effective only upon written notice and only after the expiration of ninety (90) days after a copy of such written notice is received by NRC in its regional office in which the licensed facility(ies) is located.

(d) Any other termination of this endorsement will be effective only upon written notice and only after the expiration of ninety (90) days after a copy of such written notice is received by the NRC in its regional office in which the licensed facility(ies) is located.

CERTIFICATE OF DECOMMISSIONING INSURANCE (CON'D)

I hereby certify that the Insurer is licensed to transact the business of insurance in one or more states.

Rodman A. Frates

Signature of Authorized Representative of Insurer

Typed Name Rodman A. Frates

Title Agent

Address P.O. Box 26967, Oklahoma City, Ok 73126

STANDBY TRUST AGREEMENT

TRUST AGREEMENT, the Agreement entered into as of July 18, 1990 by and between Kerr-McGee Corporation, a Delaware Corporation, herein referred to as the "Grantor", and Liberty National Bank & Trust Company, the "Trustee".

WHEREAS, the U.S. Nuclear Regulatory Commission (NRC), an agency of the U.S. Government, pursuant to the Atomic Energy Act of 1954, as amended, and the Energy Reorganization Act of 1974, has promulgated regulations in Title 10, Chapter I of the Code of Federal Regulations, Part 40. These regulations, applicable to the Grantor, require that a holder of, or an applicant for, a Part 30, 40, 70, or 72 license provide assurance that funds will be available when needed for required decommissioning activities.

WHEREAS, the Grantor has elected to use an insurance policy to provide all of such financial assurance for the facilities identified herein; and

WHEREAS, when payment is made under an insurance policy, this standby trust shall be used for the receipt of such payment; and

WHEREAS, the Grantor, acting through its duly authorized officers, has selected the Trustee to be the trustee under this Agreement, and the Trustee is willing to act as trustee,

NOW, THEREFORE, the Grantor and the Trustee agree as follows:

Section 1. Definitions. As used in this Agreement:

(a) The term "Grantor" means the NRC licensee who enters into this Agreement and any successors or assigns of the Grantor.

(b) The term "Trustee" means the trustee who enters into this Agreement and any successor Trustee.

Section 2. Costs of Decommissioning. This Agreement pertains to the costs of decommissioning the materials and activities identified in License Number SUB-986 issued pursuant to 10 CFR Part 40 as shown in Schedule A.

Section 3. Establishment of Fund. The Grantor and the Trustee hereby establish a standby trust fund (the Fund) for the benefit of the NRC. The Grantor and the Trustee intend that no third party have access to the Fund except as provided herein.

Section 4. Payments Constituting the Fund. Payments made to the

Trustee for the Fund shall consist of cash, securities, or other liquid assets acceptable to the Trustee. The Fund is established initially as consisting of the property, which is acceptable to the Trustee, described in Schedule B attached hereto. Such property and any other property subsequently transferred to the Trustee are referred to as the "Fund", together with all earnings and profits thereon, less any payments or distributions made by the Trustee pursuant to this Agreement. The Fund shall be held by the Trustee, IN TRUST, as hereinafter provided. The Trustee shall not be responsible nor shall it undertake any responsibility for the amount of, or adequacy of the Fund, nor any duty to collect from the Grantor, any payments necessary to discharge any liabilities of the Grantor established by the NRC.

Section 5. Payment for Required Activities Specified in the Plan. The Trustee shall make payments from the Fund to the Grantor upon presentation to the Trustee of the following:

a. A certificate duly executed by the Secretary of the Depositor attesting to the occurrence of the events, and in the form set forth in the attached Specimen Certificate, and

b. A certificate attesting to the following conditions;

(1) that decommissioning is proceeding pursuant to an NRC-approved plan,

(2) that the funds withdrawn will be expended for activities undertaken pursuant to that Plan, and

(3) that the NRC has been given 30 days' prior notice of Kerr-McGee Corporation's intent to withdraw funds from the escrow fund.

No withdrawal from the fund can exceed 10.0 percent of the outstanding balance of the Fund or 75,000.00 dollars, whichever is greater, unless NRC approval is attached.

In the event of the Grantor's default or inability to direct decommissioning activities, the Trustee shall make payments from the Fund as the NRC shall direct, in writing, to provide for the payment of the costs of required activities covered by this Agreement. The Trustee shall reimburse the Grantor or other persons as specified by the NRC, or State agency, from the Fund for expenditures for required activities in such amounts as the NRC, or State agency, shall direct in writing. In addition, the Trustee shall refund to the Grantor such amounts as the NRC specifies in writing. Upon refund, such funds shall no longer constitute part of the Fund as defined herein.

4.3.2 Standby Trust Agreement (Continued)

Section 6. Trust Management. The Trustee shall invest and reinvest the principal and income of the Fund and keep the Fund invested as a single fund, without distinction between principal and income, in accordance with general investment policies and guidelines which the Grantor may communicate in writing to the Trustee from time to time, subject, however, to the provisions of this section. In investing, reinvesting, exchanging, selling, and managing the Fund, the Trustee shall discharge its duties with respect to the Fund solely in the interest of the beneficiary and with the care, skill, prudence, and diligence under the circumstances then prevailing which persons of prudence, acting in a like capacity and familiar with such matters, would use in the conduct of an enterprise of a like character and with like aims; except that:

(a) Securities or other obligations of the Grantor, or any other owner or operator of the facilities, or any of their affiliates as defined in the Investment Company Act of 1940, as amended (15 U.S.C. 80a-2(a)), shall not be acquired or held, unless they are securities or other obligations of the Federal or a State government;

(b) The Trustee is authorized to invest the Fund in time or demand deposits of the Trustee, to the extent insured by an agency of the Federal government; and

(c) For a reasonable time, not to exceed 60 days, the Trustee is authorized to hold uninvested cash, awaiting investment or distribution, without liability for the payment of interest thereon.

Section 7. Commingling and Investment. The Trustee is expressly authorized in its discretion:

(a) To transfer from time to time any or all of the assets of the fund to any common, commingled, or collective trust fund created by the Trustee in which the Fund is eligible to participate, subject to all of the provisions thereof, to be commingled with the assets of other trusts participating therein; and

(b) To purchase shares in any investment company registered under the Investment Company Act of 1940 (15 U.S.C. 80a-1 et seq.), including one that may be created, managed, underwritten, or to which investment advice is rendered, or the shares of which are sold by the Trustee. The Trustee may vote such shares in its discretion.

Section 8. Express Powers of Trustee. Without in any way limiting the powers and discretion conferred upon the Trustee by the other provisions of this Agreement or by law, the Trustee is expressly authorized and empowered:

4.3.2 Standby Trust Agreement (Continued)

(a) To sell, exchange, convey, transfer, or otherwise dispose of any property held by it, by public or private sale, as necessary for prudent management of the Fund;

(b) To make, execute, acknowledge, and deliver any and all documents of transfer and conveyance and any and all other instruments that may be necessary or appropriate to carry out the powers herein granted;

(c) To register any securities held in the Fund in its own name, or in the name of a nominee, and to hold any security in bearer form or in book entry, or to combine certificates representing such securities with certificates of the same issue held by the Trustee in other fiduciary capacities, to reinvest interest payments and funds from matured and redeemed instruments, to file proper forms concerning securities held in the Fund in a timely fashion with appropriate government agencies, or to deposit or arrange for the deposit of such securities in a qualified central depository even though, when so deposited, such securities may be merged and held in bulk in the name of the nominee or such depository with other securities deposited therein by another person, or to deposit or arrange for the deposit of any securities issued by the U.S. Government, or any agency or instrumentality thereof, with a Federal Reserve bank, but the books and records of the Trustee shall at all times show that all such securities are part of the Fund;

(d) To deposit any cash in the Fund in interest-bearing accounts maintained or savings certificates issued by the Trustee, in its separate corporate capacity, or in any other banking institution affiliated with the Trustee, to the extent insured by an agency of the Federal government; and

(e) To comprise or otherwise adjust all claims in favor of or against the Fund.

Section 9. Taxes and Expenses. All taxes of any kind that may be assessed or levied against or in respect of the Fund and all brokerage commissions incurred by the Fund shall be paid from the Fund. All other expenses incurred by the Trustee in connection with the administration of this Trust, including fees for legal services rendered to the Trustee, the compensation of the Trustee to the extent not paid directly by the Grantor, and all other proper charges and disbursements of the Trustee shall be paid from the Fund.

Section 10. Annual Valuation. After payment has been made into this standby trust fund, the Trustee shall annually, at least 30 days before the anniversary date of receipt of payment into the

standby trust fund, furnish to the Grantor and to the NRC a statement confirming the value of the Trust. Any securities in the Fund shall be valued at market value as of no more than 60 days before the anniversary date of the establishment of the Fund. The failure of the Grantor to object in writing to the Trustee within 90 days after the statement has been furnished to the Grantor and the NRC, or State agency, shall constitute a conclusively binding assent by the Grantor, barring the Grantor from asserting any claim or liability against the Trustee with respect to the matters disclosed in the statement.

Section 11. Advice of Counsel. The Trustee may from time to time consult with counsel with respect to any question arising as to the construction of this Agreement or any action to be taken hereunder. The Trustee shall be fully protected, to the extent permitted by law, in acting on the advice of counsel.

Section 12. Trustee Compensation. The Trustee shall be entitled to reasonable compensation for its services as agreed upon in writing with the Grantor.

Section 13. Successor Trustee. Upon 90 days notice to the NRC, the Trustee may resign; upon 90 days notice to NRC and the Trustee, the Grantor may replace the Trustee; but such resignation or replacement shall not be effective until the Grantor has appointed a successor Trustee and this successor accepts the appointment. The successor Trustee shall have the same powers and duties as those conferred upon the Trustee hereunder. Upon the successor Trustee's acceptance of the appointment, the Trustee shall assign, transfer, and pay over to the successor Trustee the funds and properties then constituting the Fund. If for any reason the Grantor cannot or does not act in the event of the resignation of the Trustee, the Trustee may apply to a court of competent jurisdiction for the appointment of a successor Trustee or for instructions. The successor Trustee shall specify the date on which it assumes administration of the trust in a writing sent to the Grantor, the NRC or State agency, and the present Trustee by certified mail 10 days before such change becomes effective. Any expense incurred by the Trustee as a result of any of the acts contemplated by this section shall be paid as provided in Section 9.

Section 14. Instructions to the Trustee. All orders, requests, and instructions by the Grantor to the Trustee shall be in writing, signed by such persons as are signatories to this agreement or such other designees as the Grantor may designate in writing. The Trustee shall be fully protected in acting without inquiry in accordance with the Grantor's orders, requests, and instructions. If the NRC or State agency issues orders, requests, or instructions to the Trustee these shall be in writing, signed by the NRC, or State agency, or their designees, and the Trustee shall act and shall be fully protected in acting in accordance with such orders,

requests, and instructions. The Trustee shall have the right to assume, in the absence of written notice to the contrary, that no event constituting a change or a termination of the authority of any person to act on behalf of the Grantor, the NRC, or State agency, hereunder has occurred. The Trustee shall have no duty to act in the absence of such orders, requests, and instructions from the Grantor and/or the NRC, or State agency, except as provided herein.

Section 15. Amendment of Agreement. This Agreement may be amended by an instrument in writing executed by the Grantor, the Trustee and the NRC, or State agency, or by the Trustee and the NRC or State agency, if the Grantor ceases to exist.

Section 16. Irrevocability and Termination. Subject to the right of the parties to amend this Agreement as provided in Section 15, this trust shall be irrevocable and shall continue until terminated at the written agreement of the Grantor, the Trustee, and the NRC or State agency, or by the Trustee and the NRC or State agency, if the Grantor ceases to exist. Upon termination of the trust, all remaining trust property, less final trust administration expenses, shall be delivered to the Grantor or its successor.

Section 17. Immunity and Indemnification. The Trustee shall not incur personal liability of any nature in connection with any act or omission, made in good faith, in the administration of this trust, or in carrying out any directions by the Grantor, the NRC, or State agency, issued in accordance with this Agreement. The Trustee shall be indemnified and saved harmless by the Grantor or from the trust fund, or both, from and against any personal liability to which the Trustee may be subjected by reason of any act or conduct in its official capacity, including all expenses reasonably incurred in its defense in the event the Grantor fails to provide such defense.

Section 18. This Agreement shall be administered, construed, and enforced according to the laws of the State of Oklahoma.

Section 19. Interpretation and Severability. As used in this Agreement, words in the singular include the plural and words in the plural include the singular. The descriptive headings for each section of this Agreement shall not affect the interpretation or the legal efficacy of this Agreement. If any part of this Agreement is invalid, it shall not affect the remaining provisions which will remain valid and enforceable.

IN WITNESS WHEREOF the parties have caused this Agreement to be executed by the respective officers duly authorized and the incorporate seals to be hereunto affixed and attested as of the date first written above.

4.3.2 Standby Trust Agreement (Continued)

ATTEST:

Don Hager

Signature

Don Hager

~~Ass't. Secretary~~

Title

KERR-McGEE CORPORATION

Russell Osborn

VICE PRESIDENT

Title

ATTEST:

Brenda Batchelor

Signature

Asst. Secretary

Title

LIBERTY NATIONAL BANK & TRUST COMPANY

John H Boran

Sr. Vice Pres.

Title

ACKNOWLEDGEMENT

STATE OF Oklahoma

CITY OF Oklahoma City

To Wit:

On this 23 day of July 1990, before me, a notary public in and for the city and State aforesaid, personally appeared John H. Brown, and she/he did depose and say that she/he is the Sr Vice Pres., of Liberty National Bank & Trust Company, national banking association, Trustee, which executed the above instrument, that she/he knows the seal of said association; that the seal affixed to such instrument is such corporate seal; that it was so affixed by order of the association; and that she/he signed her/his name thereto by like order.

(Signature of notary public)

My Commission Expires May 6, 1992

SCHEDULE "B"

This Schedule "B" is to be attached to and made a part of the Standby Trust Agreement entered into as of July 18, 1990 by and between Kerr-McGee Corporation, the Grantor, and Liberty National Bank & Trust Company, the Trustee.

The initial fund consists of $100.

ISSUED BY: K-M Insurance Company
NAME OF INSURED: Kerr-McGee Corporation, et al
POLICY NUMBER: GAL 89 1001-99
ENDORSEMENT NUMBER: 19
DATE OF ENDORSEMENT: July 1, 1990

DECOMMISSIONING ENDORSEMENT

IT IS UNDERSTOOD THAT:

In consideration of $2,000 annual premium the coverage under this policy is hereby extended to cover the cost of decommissioning as required by 10 CFR 40.

This endorsement certifies that the policy to which the endorsement is attached provides decommissioning insurance covering the decommissioning costs as required by 10 CFR Part 40. The coverage applies to the material covered by License No. SUB-986 issued to Kerr-McGee Corporation by the Nuclear Regulatory Commission (NRC).

The Limit of coverage granted by this Endorsement is: $750,000 (U.S. Dollars)

The Company will pay on behalf of the Insured the amount shown above as the Limit of Coverage should the Insured default on the responsibility of carrying out decommissioning in accordance with 10 CFR Part 40. Such payment will be made to the Trustee of the StandBy Trust Fund established by the Insured to receive the proceeds of coverage granted by this endorsement.

The insurance afforded with respect to such decommissioning is subject to the terms and conditions of this policy, provided however, that any provisions of the policy inconsistent with subsections (a) through (d) of this Paragraph are hereby amended to conform with subsections (a) through (d)

(a) Bankruptcy or insolvency of the insured shall not relieve the Insurer of its obligation under the policy to which this endorsement is attached.

(b) The Insurer is liable for the payment of amounts within any deductible applicable to the policy, with a right of reimbursement by the insured for any such payment made by the Insurer.

(c) Cancellation of this endorsement, whether by the Insurer or the Insured, will be effective only upon written notice and only after the expiration of ninety (90) days after a copy of such written notice is received by NRC in its regional office in which the licensed facility(ies) is located.

DECOMMISSIONING ENDORSEMENT (CON'D)

(d) Any other termination of this endorsement will be effective only upon written notice and only after the expiration of ninety (90) days after a copy of such written notice is received by the NRC in its regional office in which the licensed facility(ies) is located.

This endorsement forms a part of the Contract to which attached, effective from its date of issue unless otherwise stated herein.

Countersigned by _____
Authorized Representative

Rodman A. Frates
(Typed Name)

Agent
(Title Authorized Representative of Insurer)

P.O. Box 26967, Oklahoma City, OK 73126
(Address of Representative)

9 Physical Security

The Kerr-McGee Technical Center (KMTC) is fenced, thus providing limited access to the facility and grounds. Areas around the research buildings are well lit and many areas have additional internal fencing to provide secure storage areas. During off-hours and weekends, Kerr-McGee guards make hourly rounds of the facility. Records of the rounds are maintained. The guards are trained in the hazards that may be present at the facility. In the case of an incident with radioactive material, such as a spill, they are to call the RSO so that immediate action can be taken. The KMTC has arrangements with local police, fire authorities, and the area emergency ambulance service and area hospital and they can be reached immediately by telephone in the event of an emergency.

THIS PAGE IS AN OVERSIZED DRAWING OR FIGURE,

THAT CAN BE VIEWED AT THE RECORD TITLED:

TECHCNTR 001, REV. 0
TECHNICAL CENTER SITE PLAN

WITHIN THIS PACKAGE...OR, BY SEARCHING USING THE DRAWING NUMBER:

TECHCNTR 001, REV. 0

NOTE: Because of this page's large file size, it may be more convenient to copy the file to a local drive and use the Imaging (Wang) viewer, which can be accessed from the Programs/Accessories menu.

THIS PAGE IS AN OVERSIZED DRAWING OR FIGURE,

THAT CAN BE VIEWED AT THE RECORD TITLED:

TECHCNTR 002, REV. 0

TECHNICAL CENTER FACILITY AND TEST PIT AREA

WITHIN THIS PACKAGE...OR, BY SEARCHING USING THE DRAWING NUMBER:

TECHCNTR 002, REV. 0

NOTE: Because of this page's large file size, it may be more convenient to copy the file to a local drive and use the Imaging (Wang) viewer, which can be accessed from the Programs/Accessories menu.

THIS PAGE IS AN OVERSIZED DRAWING OR FIGURE,

THAT CAN BE VIEWED AT THE RECORD TITLED:

TECHCNTR 003, REV. 0
TECHNICAL CENTER
URANIUM TEST PIT AREA
POTENTIOMETRIC SURFACE - 2/22/2000

WITHIN THIS PACKAGE...OR, BY SEARCHING USING THE DRAWING NUMBER:

TECHCNTR 003, REV. 0

NOTE: Because of this page's large file size, it may be more convenient to copy the file to a local drive and use the Imaging (Wang) viewer, which can be accessed from the Programs/Accessories menu.

THIS PAGE IS AN OVERSIZED DRAWING OR FIGURE,

THAT CAN BE VIEWED AT THE RECORD TITLED:

TECHCNTR 004, REV. 0
TECHNICAL CENTER
OUTDOOR IMPACTED AREAS AND SURVEY UNIT DESIGNATION

WITHIN THIS PACKAGE...OR, BY SEARCHING USING THE DRAWING NUMBER:

TECHCNTR 004, REV. 0

NOTE: Because of this page's large file size, it may be more convenient to copy the file to a local drive and use the Imaging (Wang) viewer, which can be accessed from the Programs/Accessories menu.

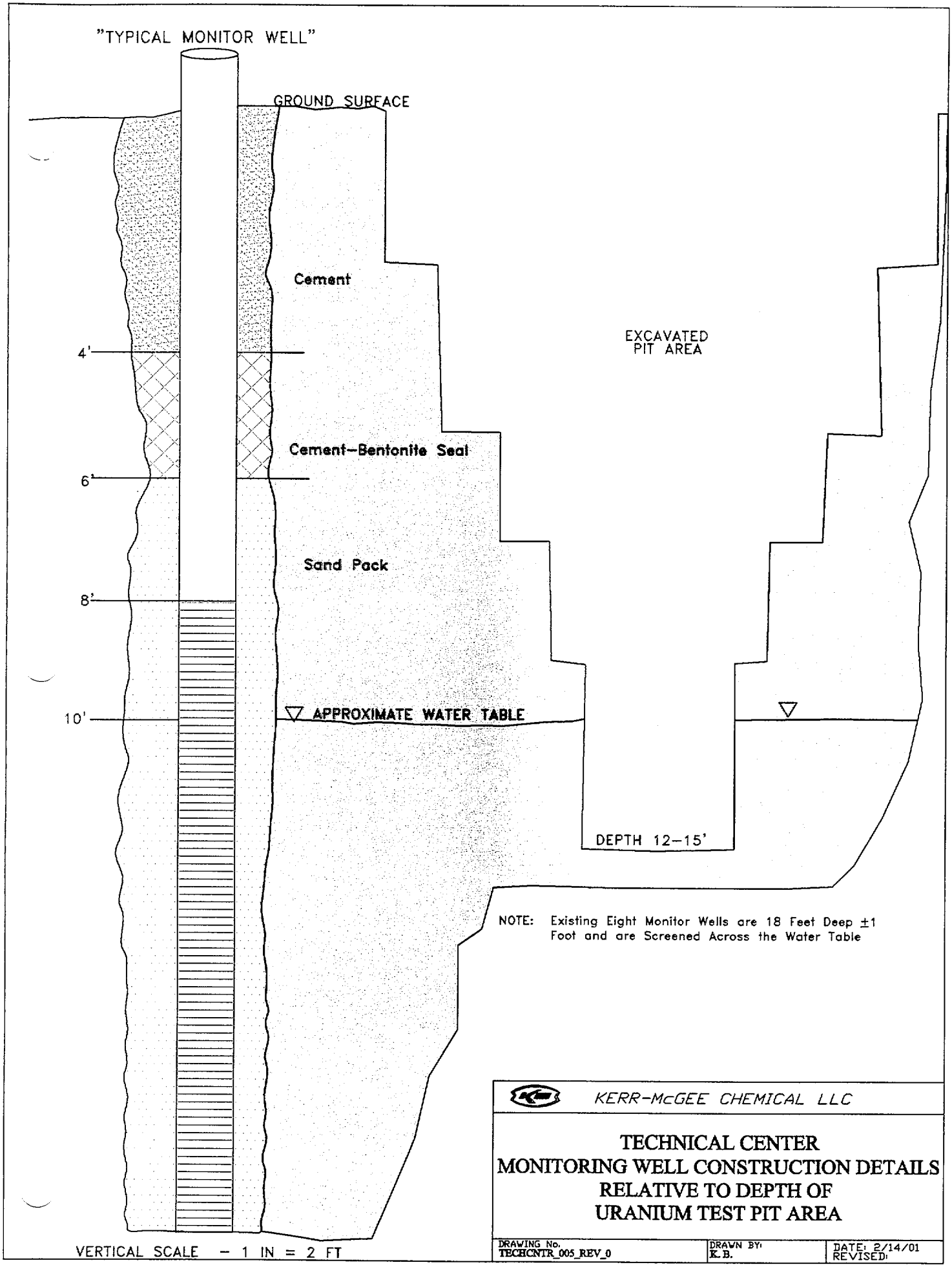
"TYPICAL MONITOR WELL"
GROUND SURFACE
Cement
4'
Cement–Bentonite Seal
6'
Sand Pack
8'
10'
APPROXIMATE WATER TABLE
EXCAVATED PIT AREA
DEPTH 12–15'
NOTE: Existing Eight Monitor Wells are 18 Feet Deep ±1 Foot and are Screened Across the Water Table
VERTICAL SCALE – 1 IN = 2 FT
KERR-McGEE CHEMICAL LLC
TECHNICAL CENTER
MONITORING WELL CONSTRUCTION DETAILS
RELATIVE TO DEPTH OF
URANIUM TEST PIT AREA
DRAWING No. TECHCNTR_005_REV_0
DRAWN BY: K.B.
DATE: 2/14/01
REVISED:

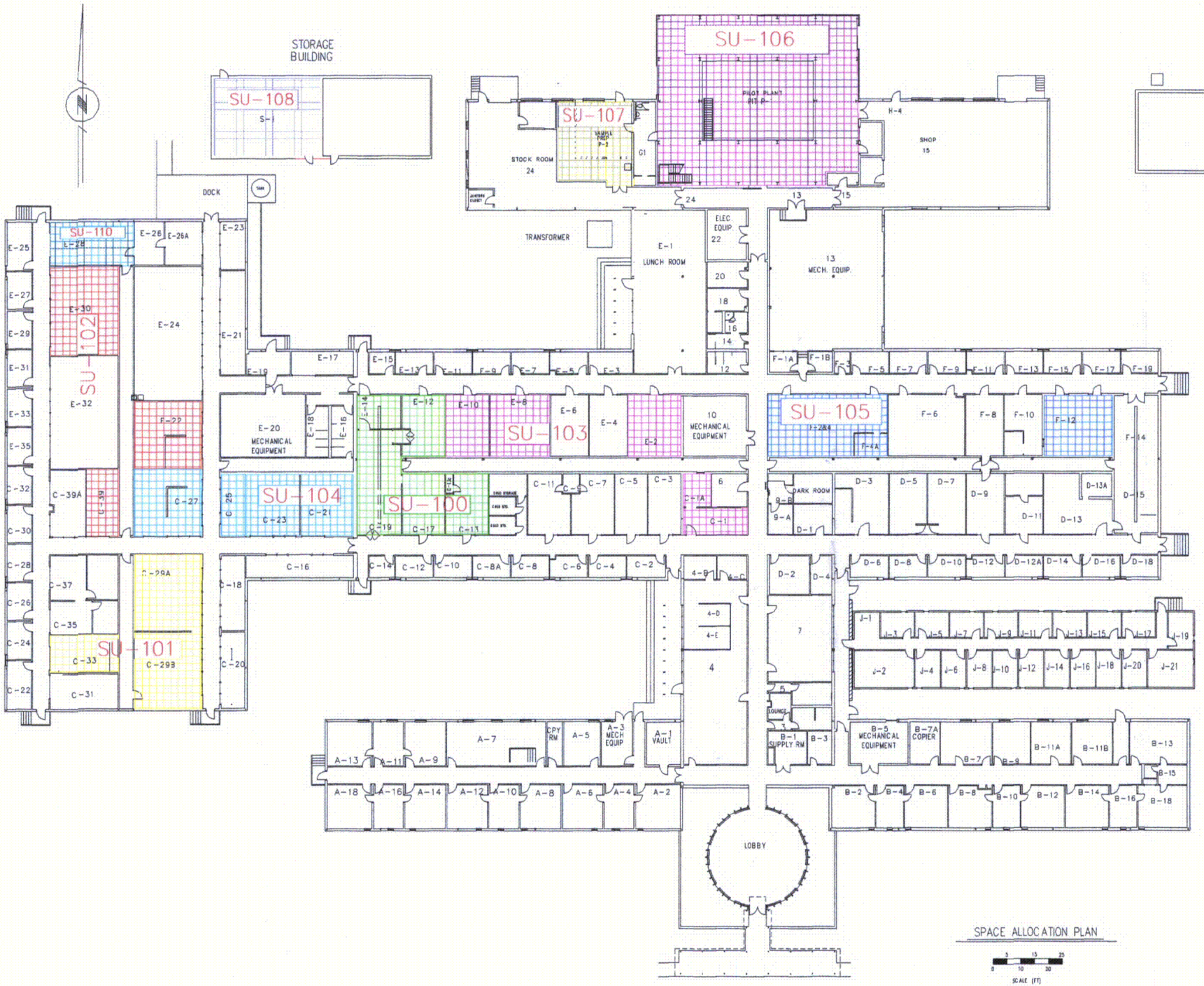

C-1

KERR-McGEE CHEMICAL LLC.

TECHCNTR_006_REV-004
Kerr-McGee Technical Center
Indoor Survey Units

PREPARED BY: SM	DWN BY: BLH
DRAWING NO. KMTC-2	DATE: 4/4/01