OG-01-039
June 15, 2001

WCAP-15622, Rev. 0
Project Number 694

Document Control Desk
U.S. Nuclear Regulatory Commission
Washington, DC 20555-0001

Attention: Chief, Information Management Branch,
Division of Inspection and Support Programs

Subject: Westinghouse Owners Group
Transmittal of WCAP-15622, "Risk-Informed Evaluation of Extensions to AC Electrical Power System Completion Times" Non-Proprietary Class 3 (MUHP-3010)

This letter transmits twelve (12) copies of the report WCAP-15622, "Risk-Informed Evaluation of Extensions to AC Electrical Power System Completion Times" dated May 2001. WCAP-15622 provides the technical justification for extending the Completion Times (CTs), contained in the following NUREG-1431, Rev. 2 Improved Standard Technical Specifications:

1. 3.8.1, AC Sources – Operating, Condition B, One [required] DG inoperable.

   Required Action B.3.1, Determine Operable DG(s) is not inoperable due to common cause failure, and

   Required Action B.3.2, Perform SR 3.8.1.2 for Operable DG(s).

   Increase the Completion Times from 24 hours to 72 hours.

2. 3.8.1, AC Sources – Operating, Condition B, One [required] DG inoperable.

   Required Action B.4, Restore [required] DG to Operable status.

   Increase the Completion Time from 72 hours to 7 days (14 days for Comanche Peak).

3. 3.8.9, Distribution. Systems – Operating, Condition B, One AC vital bus inoperable.

   Required Action B.1, Restore AC vital bus subsystem to Operable status.

   Increase the Completion Time from 2 hours to 24 hours.

Current CTs are often not long enough to address inoperabilities or to perform preventive maintenance activities at-power. The extended CTs will provide: 1) risk benefits related to a reduction in shutdown risk due to moving test and/or maintenance activities to power operation, 2) improved troubleshooting capabilities, and 3) improved test and maintenance activities due to the additional time available to complete these activities while at power.

D048 | 12

Eleven copies sent to Steve Bloom

The approach used in WCAP-15622 is consistent with Regulatory Guides 1.174, "An Approach for Using Probabilistic Risk Assessment in Risk-Informed Decisions on Plant-Specific Changes to the Current Licensing Basis" and 1.177, "An Approach for Plant-Specific, Risk-Informed Decisionmaking: Technical Specifications." The approach addresses the impact on defense-in-depth and the impact on safety margins, as well as an evaluation of the impact on risk. The risk evaluation follows the three-tiered approach presented in Regulatory Guide 1.177

The approach followed in this program requires plant specific analysis for each CT extension being considered by each participating utility following a consistent method. Plant specific evaluations are necessary due to the differences between plant designs, component and system reliabilities, and operating experience. The strength of the approach used is in calculating, on a consistent basis with other plants, the impact of the CT changes on plant risk for each plant and in the ensuing cross comparisons between the plant specific results and design. The cross comparisons are necessary to understand the differences in the results, and provide assurance that the results are reasonable and the conclusions valid.

Based on the plant specific evaluations and results, it was concluded that the extended CTs are reasonable based on their small impact on core damage frequency, and their associated incremental conditional core damage probability and condition core damage frequency values. It was also concluded that none of the plant specific configurations associated with these CT extensions are high risk configurations. The plant specific evaluations and results also concluded that these CT changes will have no impact on defense-in-depth and that there will be no impact on safety margins.

The WOG is submitting this licensing topical report, WCAP-15622, Rev. 0, under the NRC licensing topical report program for review and acceptance for referencing in licensing actions. The objective is that once approved, each WOG member that evaluated the CT changes and provided plant specific results in this WCAP may reference this report to request amendments to their Technical Specifications. The WOG members, who have not provided plant specific results in WCAP-15622, can provide them in the future, and reference this WCAP to request amendments to their Technical Specifications.

Appendix B of WCAP-15622 contains proposed NUREG-1431, Rev. 2 Technical Specification and Bases markups that reflect the changes justified by this report.

The Technical Specification and Bases changes contained in Appendix B of WCAP-15622 will be incorporated into an NEI Technical Specification Task Force (TSTF) Traveler that will be submitted for NRC review after the submittal of this report. The proposed changes contained in the TSTF traveler will supercede those contained in Appendix B of WCAP-15622.

The WOG requests that the NRC review the Technical Specification and Bases changes contained in the TSTF and make the changes available to the WOG members utilizing the Consolidated Line Item Improvement Process for Adopting Standard Technical Specification Changes for Power Reactors.

The report transmitted herewith bears a Westinghouse copyright notice. The NRC is permitted to make the number of copies of the information contained in these reports which are necessary for its internal use in connection with generic and plant-specific reviews and approvals as well as the issuance, denial, amendment, transfer, renewal, modification, suspension, revocation, or violation of a license, permit, order, or regulation subject to the requirements of 10 CFR 2.790 regarding restrictions on public disclosure to the extent such information has been identified as proprietary by Westinghouse, copyright protection notwithstanding. With respect to the non-proprietary versions of these reports, the NRC is

permitted to make the number of copies beyond those necessary for its internal use which are necessary in order to have one copy available for public viewing in the appropriate docket files in the public document rooms as may be required by NRC regulations if the number of copies submitted is insufficient for this purpose. Copies made by the NRC must include the copyright notice in all instances and the proprietary notice if the original was identified as proprietary.

Invoices associated with the review of this WCAP should be addressed to:

Mr. Andrew P. Drake, Project Manager
Westinghouse Owners Group
Westinghouse Electric Company
(Mail Stop ECE 5-16)
P.O. Box 355
Pittsburgh, PA 15230-0355

If you require further information, feel free to contact Mr. Ken Vavrek in the Westinghouse Owners Group Project Office at 412-374-4302.

Very truly yours,

Robert H. Bryan, Chairman
Westinghouse Owners Group

attachments/ enclosures

cc: WOG Steering Committee (1L)
B. Barron, Duke Energy (1L)
C. Bakken, AEP (1L)
WOG Primary Representatives (1L)
WOG Licensing Subcommittee Representatives (1L)
WOG MERITS Working Group Representatives (1L)
S.D. Bloom, USNRC OWFN 7E 1 (1L)
M.L. Wohl, USNRC OWFN 10 H4 (1L)
R. Etling, W- ECE 5-43 (1L)
H. A. Sepp, W- ECE 4-15 (1L)
A. P. Drake, W- ECE 5-16 (1L)

Westinghouse Non-Proprietary Class 3

WCAP - 15622

Risk-Informed Evaluation of Extensions to AC Electrical Power System Completion Times

Westinghouse Electric Company LLC

WCAP-15622

Risk-Informed Evaluation of Extensions to AC Electrical Power System Completion Times

G. R. André, J. D. Andrachek, and D. V. Lockridge
Westinghouse Electric Company

C. Carey
Tennessee Valley Authority

K. Connelly
AmerenUE

D. Tirsun
TXU Electric Company

R. Gallucci
Rochester Gas and Electric Corporation

M. S. Kitlan, Jr.
Duke Energy Corporation

S. Mabe
Carolina Power and Light Company

May 2001

Approved: _____
J. M. Brennan, Manager
Reliability and Risk Assessment

Work Performed Under Shop Order MUHP-3010

Westinghouse Electric Company LLC
P.O. Box 355
Pittsburgh, PA 15230-0355

LEGAL NOTICE

COPYRIGHT NOTICE

TABLE OF CONTENTS

TABLE OF CONTENTS (cont.)

TABLE OF CONTENTS (cont.)

LIST OF TABLES

LIST OF TABLES (cont.)

LIST OF FIGURES

LIST OF ACRONYMS

AC	Alternating Current
AFW	Auxiliary Feedwater
AOT	Allowed Outage Time
BNL	Brookhaven National Lab
CCF	Common Cause Failure
CDF	Core Damage Frequency
CT	Completion Time
DBA	Design Basis Accident
DC	Direct Current
DG	Diesel Generator
EPRI	Electric Power Research Institute
ESF	Engineered Safety Feature
ESFAS	Engineered Safety Features Actuation System
FSAR	Final Safety Analysis Report
I&C	Instrumentation and Control
ICCDP	Incremental Conditional Core Damage Probability
ICLERP	Incremental Conditional Large Early Release Probability
IPE	Individual Plant Examination
LCO	Limiting Condition for Operation
LER	Licensee Event Report
LERF	Large Early Release Frequency
LOCA	Loss of Coolant Accident
LOSP	Loss of Offsite Power
MGL	Multiple Greek Letter
NA	Not Available
NIS	Nuclear Instrumentation System
NOED	Notice of Enforcement Discretion
NRC	Nuclear Regulatory Commission
PRA	Probabilistic Risk Analysis
RCP	Reactor Coolant Pump
RHR	Residual Heat Removal
SBO	Station Blackout
SI	Safety Injection
SR	Surveillance Requirement
SSF	Safe Shutdown Facility
SSPS	Solid State Protection System
VAC	Volts Alternating Current
WOG	Westinghouse Owners Group

EXECUTIVE SUMMARY

The Westinghouse Owners Group is evaluating several AC electrical power system Technical Specification Completion Time (CT) changes as part of a larger program considering changes to a number of Technical Specification CTs. CT extensions are also being considered for a number of fluid systems, DC power systems, and containment isolation valves.

The purpose of this WCAP is to provide the technical justification for extending the CTs, also referred to as the allowed outage times, for the following (based on the Improved Standard Technical Specifications):

- LCO 3.8.1, Electrical Power Systems, AC Sources – Operating Condition B, One (required) DG inoperable

  Required Actions B.3.1 or B.3.2, Determine operable DG(s) is not inoperable due to common cause failure or perform SR 3.8.1.2 for operable DG(s)

  Evaluate increasing the completion time from 24 hours to 72 hours

- LCO 3.8.1, Electrical Power Systems, AC Sources – Operating Condition B, One (required) DG inoperable

  Required Action B.4, Restore (required) DG to operable status

  Evaluate increasing the completion time from 72 hours to 7 days (14 days for Comanche Peak)

- LCO 3.8.9, Electrical Power Systems, Distribution Systems – Operating Condition B, One AC vital bus inoperable

  Required Action B.1, Restore AC vital bus subsystem to operable status

  Evaluate increasing the completion time from 2 hours to 24 hours

The current CTs are generally insufficient to respond to operability problems and perform preventive maintenance activities at-power. Although this is a WOG program, plant specific calculations using their plant specific PRA models were required by each utility interested in the specific CT extension being considered.

The approach used in this program is consistent with the Nuclear Regulatory Commission's approach for using probabilistic risk assessment in risk-informed decisions on plant-specific changes to the current licensing basis. This approach is discussed in Regulatory Guide 1.174 ("An Approach for Using Probabilistic Risk Assessment in Risk-Informed Decisions on Plant-Specific Changes to the Licensing Basis") and Regulatory Guide 1.177 ("An Approach for Plant-Specific, Risk-Informed Decisionmaking: Technical Specifications"). The approach addresses, as documented in this report, the impact on defense-in-depth and the impact on safety margins, as well as an evaluation of the impact on risk. The risk evaluation considers the three-tiered approach as presented by the NRC in Regulatory Guide 1.177. Tier 1, PRA Capability and Insights, assessed the impact of the proposed CT change on core damage

frequency, and incremental conditional core damage probability, large early release frequency, and incremental conditional large early release probability. Tier 2, Avoidance of Risk-Significant Plant Configurations, which considers potential risk-significant plant operating configurations, and Tier 3, Risk-Informed Plant Configuration Control and Management, will be addressed on a plant specific basis when the Technical Specification CT change is implemented by each utility consistent with their Maintenance Rule program.

As part of this program, each utility interested in a specific CT change was required to evaluate the impact of the change on plant risk following a method developed as part of this program. Plant specific calculations were required due to the differences between plant designs, component and system reliabilities, and operating experience. Due to these differences generic analyses are not possible. The strength of the approach used in these evaluations lies in calculating, on a consistent basis with other plants, the impact of the CT changes on plant risk for each plant and in the ensuing cross comparisons between the plant specific results and design. The cross comparisons are required to understand the differences in the results and provides assurance that the results are reasonable and conclusions valid.

It was concluded from the plant specific evaluations and results supporting this program that the CT increases evaluated are reasonable based on their small impact on core damage frequency, and their associated incremental conditional core damage probability and conditional core damage frequency values. It was also concluded that none of the plant configurations associated with these CT extensions are high risk configurations. In addition, these CT extensions will provide: 1) risk benefits related to a reduction in shutdown risk due to moving test and/or maintenance activities to power operation, 2) improved troubleshooting capabilities and additional time to complete troubleshooting to assess the condition of the failed equipment which will lead to improved personnel safety, and 3) improved test and maintenance activities due to the additional time available to complete these activities. This study also concluded that these CT changes will have no impact on defense-in-depth and that there will be no impact on safety margins.

1 INTRODUCTION

The purpose of this program is to provide the technical justification for extending the Completion Time (CT), also referred to as the allowed outage time (AOT), for the following Technical Specification requirements:

- Diesel generator inoperable

  Restore inoperable DG to operable status

  Increase CT from 72 hours to 168 hours (7 days) (Comanche Peak also evaluated an increase to 14 days)

- Diesel generator inoperable

  Determine operable DG(s) is not inoperable due to common cause failure or perform SR 3.8.1.2 for operable DG(s)

  Increase CT from 24 hours to 72 hours

- One AC vital bus inoperable

  Restore AC vital bus to operable status

  Increase CT from 2 hours to 24 hours

The current CTs are generally insufficient to respond to operability problems and perform preventive maintenance activities at-power.

The approach used in this program is consistent with the Nuclear Regulatory Commission's (NRC) approach for using probabilistic risk assessment in risk-informed decisions on plant-specific changes to the current licensing basis. This approach is discussed in Regulatory Guide 1.174 ("An Approach for Using Probabilistic Risk Assessment in Risk-Informed Decisions on Plant-Specific Changes to the Licensing Basis," Reference 1) and Regulatory Guide 1.177 ("An Approach for Plant-Specific, Risk-Informed Decisionmaking: Technical Specifications," Reference 2). The approach addresses, as documented in this report, the impact on defense-in-depth and the impact on safety margins, as well as an evaluation of the impact on risk. The risk evaluation considers the three-tiered approach as presented by the NRC in Regulatory Guide 1.177. Tier 1, PRA Capability and Insights, assessed the impact of the proposed Completion Time change on core damage frequency (CDF), incremental conditional core damage probability (ICCDP), large early release frequency (LERF), and incremental conditional large early release probability (ICLERP). Tier 2, Avoidance of Risk-Significant Plant Configurations, considered potential risk-significant plant operating configurations. Tier 3, Risk-Informed Plant Configuration Control and Management, will be addressed on a plant specific basis when the Technical Specification Completion Time change is implemented by each utility consistent with their Maintenance Rule program.

As part of this program, each utility interested in a specific CT change is required to evaluate the impact of the change on plant risk following a method developed as part of this program.

Plant specific calculations are required due to the differences between plant designs, component and system reliabilities, and operating experience. Due to these differences generic analyses are not possible. The strength of the approach used in these evaluations lies in calculating, on a consistent basis with other plants, the impact of the CT changes on plant risk for each plant and in the ensuing cross comparisons between the plant specific results and design. The cross comparisons are required to understand the differences in the results and provides assurance that the results are reasonable and conclusions valid.

Utilities not evaluating these CT changes at this time can do so at a later time. This will require those utilities to follow the same approach developed for this program and complete cross comparisons of their information with that provided for the utilities included in this WCAP, and to submit a License Amendment Request. This work will need to be completed by each utility at their own expense, but it does represent a savings to the utility since they will be following an approach reviewed by the NRC and the cross comparison information and approach will be available in this WCAP.

Plants participating in these evaluations with results included in this WCAP are:

- Callaway Plant (Callaway)
- Catawba Nuclear Station (Catawba)
- Comanche Peak Steam Electric Station (Comanche Peak)
- R. E. Ginna Nuclear Power Plant (Ginna)
- McGuire Nuclear Station (McGuire)
- Sequoyah Nuclear Plant (Sequoyah)
- Shearon Harris Nuclear Power Plant (Shearon Harris)
- V. C. Summer Nuclear Station (Summer)

(Note: Throughout this report the plant is referred to by the name in parenthesis.)

The Westinghouse Owners Group is evaluating these changes as part of a larger program considering changes to a number of Technical Specification CTs. CT extensions are also being considered for a number of fluid systems, DC power systems, and containment isolation valves.

2 TECHNICAL SPECIFICATIONS

The relevant Technical Specifications for the diesel generators and vital AC buses from NUREG-1431, Rev. 2 (Improved Standard Technical Specifications) for Westinghouse Plants follow.

3.8 ELECTRICAL POWER SYSTEMS

3.8.1 AC Sources - Operating

LCO 3.8.1 The following AC electrical sources shall be OPERABLE:

a. Two qualified circuits between the offsite transmission network and the onsite Class 1E AC Electrical Power Distribution System,

b. Two diesel generators (DGs) capable of supplying the onsite Class 1E power distribution subsystem(s), and

[c. Automatic load sequencers for Train A and Train B.]

APPLICABILITY: MODES 1, 2, 3, and 4.

ACTIONS

CONDITION	REQUIRED ACTION		COMPLETION TIME
A. One [required] offsite circuit inoperable.	A.1	Perform SR 3.8.1.1 for [required] OPERABLE offsite circuit.	1 hour AND Once per 8 hours thereafter
	AND		
	A.2	Declare required feature(s) with no offsite power available inoperable when its redundant required feature(s) is inoperable.	24 hours from discovery of no offsite power to one train concurrent with inoperability of redundant required feature(s)
	AND		

ACTIONS (continued)

CONDITION	REQUIRED ACTION		COMPLETION TIME
	A.3	Restore [required] offsite circuit to OPERABLE status.	72 hours AND 6 days from discovery of failure to meet LCO
B. One [required] DG inoperable.	B.1	Perform SR 3.8.1.1 for the [required] offsite circuit(s).	1 hour AND Once per 8 hours thereafter
	AND		
	B.2	Declare required feature(s) supported by the inoperable DG inoperable when its required redundant feature(s) is inoperable.	4 hours from discovery of Condition B concurrent with inoperability of redundant required feature(s)
	AND		
	B.3.1	Determine OPERABLE DG(s) is not inoperable due to common cause failure.	[24] hours
	OR		
	B.3.2	Perform SR 3.8.1.2 for OPERABLE DG(s).	[24] hours
	AND		

ACTIONS (continued)

CONDITION	REQUIRED ACTION		COMPLETION TIME
	B.4	Restore [required] DG to OPERABLE status.	72 hours AND 6 days from discovery of failure to meet LCO
C. Two [required] offsite circuits inoperable.	C.1	Declare required feature(s) inoperable when its redundant required feature(s) is inoperable.	12 hours from discovery of Condition C concurrent with inoperability of redundant required features
	AND		
	C.2	Restore one [required] offsite circuit to OPERABLE status.	24 hours
D. One [required] offsite circuit inoperable. AND One [required] DG inoperable.		---------- - NOTE - Enter applicable Conditions and Required Actions of LCO 3.8.9, "Distribution Systems - Operating," when Condition D is entered with no AC power source to any train. ----------	
	D.1	Restore [required] offsite circuit to OPERABLE status.	12 hours
	OR		
	D.2	Restore [required] DG to OPERABLE status.	12 hours

ACTIONS (continued)

CONDITION	REQUIRED ACTION		COMPLETION TIME
E. Two [required] DGs inoperable.	E.1	Restore one [required] DG to OPERABLE status.	2 hours
---------- **- REVIEWER'S NOTE -** This Condition may be deleted if the unit design is such that any sequencer failure mode will only affect the ability of the associated DG to power its respective safety loads following a loss of offsite power independent of, or coincident with, a Design Basis Event. ---------- F. [One [required] [automatic load sequencer] inoperable.	F.1	Restore [required] [automatic load sequencer] to OPERABLE status.	[12] hours]
G. Required Action and associated Completion Time of Condition A, B, C, D, E, or [F] not met.	G.1	Be in MODE 3.	6 hours
	AND		
	G.2	Be in MODE 5.	36 hours
H. Three or more [required] AC sources inoperable.	H.1	Enter LCO 3.0.3.	Immediately

SURVEILLANCE REQUIREMENTS

SURVEILLANCE		FREQUENCY
SR 3.8.1.1	Verify correct breaker alignment and indicated power availability for each [required] offsite circuit.	7 days

3.8 ELECTRICAL POWER SYSTEMS

3.8.9 Distribution Systems - Operating

LCO 3.8.9 Train A and Train B AC, DC, and AC vital bus electrical power distribution subsystems shall be OPERABLE.

APPLICABILITY: MODES 1, 2, 3, and 4.

ACTIONS

CONDITION	REQUIRED ACTION		COMPLETION TIME
A. One or more AC electrical power distribution subsystems inoperable.		---------- **- NOTE -** Enter applicable Conditions and Required Actions of LCO 3.8.4, "DC Sources - Operating," for DC trains made inoperable by inoperable power distribution subsystems. ----------	
	A.1	Restore AC electrical power distribution subsystem(s) to OPERABLE status.	8 hours AND 16 hours from discovery of failure to meet LCO
B. One or more AC vital buses inoperable.	B.1	Restore AC vital bus subsystem(s) to OPERABLE status.	2 hours AND 16 hours from discovery of failure to meet LCO

ACTIONS (continued)

CONDITION	REQUIRED ACTION		COMPLETION TIME
C. One or more DC electrical power distribution subsystems inoperable.	C.1	Restore DC electrical power distribution subsystem(s) to OPERABLE status.	2 hours AND 16 hours from discovery of failure to meet LCO
D. Required Action and associated Completion Time not met.	D.1	Be in MODE 3.	6 hours
	AND		
	D.2	Be in MODE 5.	36 hours
E. Two or more electrical power distribution subsystems inoperable that result in a loss of safety function.	E.1	Enter LCO 3.0.3.	Immediately

SURVEILLANCE REQUIREMENTS

SURVEILLANCE		FREQUENCY
SR 3.8.9.1	Verify correct breaker alignments and voltage to [required] AC, DC, and AC vital bus electrical power distribution subsystems.	7 days

3 NEED FOR COMPLETION TIME CHANGE

As discussed in Regulatory Guide 1.177 acceptable reasons for requesting Technical Specification changes fall into one or more of the following categories:

Improvement to operational safety: A change to Technical Specifications can be made due to reductions in the plant risk or a reduction in the occupational exposure of plant personnel in complying with the Tech Spec requirements.

Consistency with risk basis in regulatory requirements: Technical Specifications requirements can be changed to reflect improved design features in a plant or to reflect equipment reliability improvements that make a previous requirement unnecessarily stringent or ineffective. Technical Specifications may be changed to establish consistently based requirements across the industry or across an industry group.

Reduce unnecessary burdens: The change may be requested to reduce unnecessary burdens in complying with current Technical Specification requirements, based on operating history of the plant or industry in general. This includes extending completion times 1) that are too short to complete repairs when components fail with the plant at-power, 2) to complete additional maintenance activities at-power to reduce plant down time, and 3) provide increased flexibility to plant operators.

The CT extensions in this WCAP are requested primarily to provide an improvement to operational safety, reduce unnecessary burdens, and provide a more consistent risk basis in regulatory requirements. In addition, the assumption that shutting the plant down is the safest course of action is not always valid but, depending on the component or system of interest, it may be safer to complete component repairs at power. For example, the residual heat removal (RHR) system is important for shutdown cooling in Modes 5 and 6, and the switch from auxiliary feedwater (AFW) for decay heat removal to RHR cooling in Mode 4 represents an increased risk level due to system alignment changes that could lead to loss of inventory events. Potential risks associated with plant shutdown need to be considered when determining an appropriate course of action. Extended CTs enable this shutdown risk to be averted.

With regard to the regulatory basis consistency, a number of plants have modified their operating practices and improved mitigation system capabilities, and these changes have not yet been reflected in the Technical Specification requirements related to the time equipment can be out of service. For example, some utilities have implemented cross connects between support systems at dual unit sites and others have implemented backup reactor coolant pump (RCP) seal cooling systems. In addition, more realistic RCP seal LOCA models currently being developed provide a more realistic assessment of the risk associated with RCP seal LOCAs. Furthermore, plant operating experience has shown that initiating event frequencies are now significantly lower than in the past. These improvements in plant operation and PRA modeling can be credited to provide more realistic or extended CTs while maintaining plant safety.

These CT extensions are requested since the current CTs are not always adequate to complete preventive and corrective maintenance activities while at power. Utilities are interested in

extending certain CTs to allow them to complete preventive maintenance activities, that are currently performed during shutdown, during power operation. Often the risk of completing these activities while shutdown is nearly equal to or greater than the risk of completing these activities while at-power. In other cases extended CTs are required in order to complete repair activities while at-power to avoid a plant shutdown and the accompanying mode change or shutdown risk if the repair is not completed within the CT. Finally, the extended CTs are expected to improve operational safety with regard to allowing more time to complete troubleshooting activities prior to switching buses to alternate power sources. The following discusses the need for each individual CT extension request.

DIESEL GENERATOR CT

This CT extension will be used primarily for two purposes:

- Avoid the need to shut down the plant to complete repair activities and reduce or eliminate the need for Notices of Enforcement Discretion (NOED) from the NRC.

- Complete additional planned maintenance activities at-power.

A number of utilities are interested in completing preventive DG maintenance activities and test activities while the plant is in power operation (Mode 1). Currently, significant DG preventive maintenance and testing activities are completed while the plant is shutdown and sometimes these activities become critical path delaying the plant's return to power. Moving these activities to power operation can result in reduced outage time.

The proposed CT extension will also provide increased flexibility with regard to responding to DG repair activities. At some utilities operating experience has shown that this CT is the most demanding part of the DG Technical Specification. One plant cited an example involving DG governor problems, which occurred in 1999, that required the utility to request a NOED. Troubleshooting and repair activities were unsuccessful in restoring operation of the DG within 72 hours. The NOED requested an additional 48 hours. The NRC granted the NEOD and the repair was completed in approximately 115 hours. At another plant there were two instances in 1999 that required the plant to be in the DG Required Action for a significant length of time. The first involved a broken spring that required approximately 57 hours to repair and the second involved a breaker contact problem that caused erratic operation of a DG and required approximately 68 hours to repair. A third DG failure occurred while the plant was shut down and required approximately 7 days to repair. Had this failure occurred while the plant was at-power, the utility would have had to either request an Enforcement Discretion or shut down.

Extending the CT to 7 days will provide increased flexibility for plant personnel to complete repairs without having to place the plant through potential unnecessary shutdown transients which can lead to an increased risk level greater than the incremental at-power risk. This extended CT will also reduce the need for Requests for Enforcement Discretion submittals and the administrative burden on plant personnel who prepare this information.

DG COMMON CAUSE FAILURE EVALUATION CT

This CT extension will be used primarily to avoid the need to shut down the plant due to failure to complete the common cause failure operability evaluation within 24 hours and reduce or eliminate the need for Notices of Enforcement Discretion (NOED) from the NRC. Experience has shown at some utilities that this is a very challenging requirement in the DG Technical Specifications. Each time a DG is inoperable, it is necessary to demonstrate that the other DG is not operable for the same reason. Often it is obvious the operable DG is not inoperable due to a common cause issue, such as, DG inoperability due to an inoperable support system. However, there are times when it is not immediately known.

At one utility the standard procedure for addressing significant equipment failures is to form a Failure Investigation Team whose purpose is to investigate the failure and determine the root cause of the problem. There are times when the root cause determination cannot be completed prior to the expiration of the 24 hour CT and the operable DG must be run to confirm it is operable. Starting the DG is not always the most appropriate manner to demonstrate that the DG is operable since the failure mechanism may not manifest itself immediately during the test. In addition, this additional test causes DG wear.

In 1999, one plant experienced an exhaust valve failure on one DG following scheduled maintenance. Since the Unit was not in an applicable mode, the Technical Specification requirement was not applicable. But there was a concern that there could be a common cause failure mechanism with Unit 2 DGs. Unit 2 was at power. Plans were made to inspect Unit 2B DG for exhaust valve problems. But if problems were found, due to the extensive amount of time required to inspect DG B, it was anticipated that the 24 hour CT to inspect DG A on Unit 2 could expire prior to declaring DG B operable. If this occurred, shutdown of Unit 2 would be required. A Request for Enforcement Discretion submittal to extend the completion time from 24 hours to 36 hours was developed. A Request for Enforcement Discretion was not requested since no damage was noted on the Unit 2 DGs so the CT was not challenged. The subsequent root cause investigation determined that there were no common cause issues.

Extending the CT to 72 hours would provide increased flexibility for plant personnel without having to put the plant through a potential unnecessary shutdown which can lead to an increased risk level greater than the incremental at-power risk. This extended CT will also reduce the need for Enforcement Discretion submittals and the administrative burden on plant personnel who prepare this information as well as reduce the number of actual Enforcement Discretion requests to the NRC.

VITAL AC BUS CT

The primary benefit for obtaining this CT extension is for protection of equipment and personnel safety immediately following a failure. The current Technical Specifications require that an inoperable AC vital bus be restored to operable status within 2 hours. This is typically done by manually switching the affected vital bus to its alternate power source. Failure of a vital bus is immediately indicated in the Control Room by a number of alarms and status lights. Operators in the Control Room enter the appropriate Abnormal Procedures to stabilize the

plant. Operations personnel are dispatched to the area of the plant where the affected equipment is located. Engineering, and Instrumentation and Control personnel (or Maintenance personnel) assess the problem; prior to aligning power to the impacted bus the failed component needs to be identified and isolated. This includes verification that the bus is not faulted to avoid closing a breaker on to a faulted bus. Due to the length of time this troubleshooting requires, there have been previous situations when the 2 hour CT was challenged.

The following provides several examples:

- February 1999: Loss of 120 VAC vital I&C channel occurred due to an inverter failure. Troubleshooting, to verify the bus was not faulted, resulted in a 1 hour 17 minute delay until the bus was aligned to its alternate power source and energized.

- April 2000: Loss of a 120 VAC vital I&C channel occurred due to an inverter output switch failure. The bus was de-energized for 1 hour and 2 minutes before being re-energized from the alternate source.

- May 2000: Loss of 120 VAC vital I&C channel occurred after an inverter output switch opened. Operations personnel were in the inverter room at the time the channel was lost. It required 1 hour and 16 minutes to diagnose, troubleshoot, and re-energize the channel from the alternate power source.

Extending the CT provides increased flexibility for plant personnel to troubleshoot and complete repairs in a more controlled manner which will enhance equipment and personnel safety. This extension will also reduce the administrative burden on plant personnel who prepare Requests for Enforcement Discretion submittals as well as reduce the number of actual Enforcement Discretion requests to the NRC.

4 TECHNICAL SPECIFICATION CHANGE REQUEST

This analysis provides the justification for extending the completion times specified in the Improved Standard Technical Specifications for Westinghouse Plants (NUREG-1431, Rev. 2) for the following three Required Actions.

LCO 3.8.1, Electrical Power Systems, AC Sources – Operating Condition B, One (required) DG inoperable

Required Actions B.3.1 or B.3.2, Determine operable DG(s) is not inoperable due to common cause failure or perform SR 3.8.1.2 for operable DG(s)

Evaluate increasing the completion time from 24 hours to 72 hours

LCO 3.8.1, Electrical Power Systems, AC Sources – Operating Condition B, One (required) DG inoperable

Required Action B.4, Restore (required) DG to operable status

Evaluate increasing the completion time from 72 hours to 7 days (14 days for Comanche Peak)

LCO 3.8.9, Electrical Power Systems, Distribution Systems – Operating Condition B, One AC vital bus inoperable

Required Action B.1, Restore AC vital bus subsystem to operable status

Evaluate increasing the completion time from 2 hours to 24 hours

5 DESIGN BASIS REQUIREMENTS AND IMPACT

The following discusses the design basis requirements and the impact of the proposed CT extensions on these requirements for the onsite AC electrical power sources and the vital AC buses.

5.1 ONSITE AC ELECTRICAL POWER SOURCES

The onsite AC electrical power sources are required to supply power to the ESF buses if the offsite power source is lost. Typically, DGs are used as the onsite power sources. A DG starts automatically on a safety injection signal or on an ESF bus degraded or undervoltage signal. After a DG has started it will automatically tie to its respective bus after offsite power is tripped as a consequence of ESF bus undervoltage or degraded voltage. DGs will also start and operate in the standby mode without tying to the ESF bus on a safety injection (SI) signal alone. Following the trip of offsite power, loads are stripped from the ESF buses, the DGs are tied on their respective buses, and loads are sequentially connected to their ESF bus by the automatic load sequencer. In the event of a loss of preferred power, the ESF electrical loads are automatically connected to the DGs in sufficient time to provide for safe reactor shutdown and to mitigate the consequences of a Design Basis Accident (DBA).

The initial conditions of DBA and transient analysis in the FSAR assume ESF systems are operable. The AC electrical power sources are designed to provide sufficient capacity, capability, redundancy, and reliability to ensure the availability of necessary power to ESF systems so that fuel, reactor coolant system, and containment design limits are not exceeded. The operability of the AC electrical power sources is consistent with the initial assumptions of the accident analysis and is based on meeting the design basis of the unit. This results in maintaining at least one train of the onsite AC sources operable during accident conditions in the event of:

- an assumed loss of all offsite power or all onsite AC power
- a worst case single failure.

Each DG must be capable of starting, accelerating to rated speed and voltage, and connecting to its respective ESF bus on detection of bus undervoltage. This must be accomplished within a unit specific time limit. Each DG must also be capable of accepting required loads within the assumed loading sequence intervals, and continue to operate until offsite power can be restored to the ESF buses. These capabilities are required to be met from a variety of initial conditions, such as, DG in standby with the engine hot and DG in standby with the engine at ambient conditions. Additional DG capabilities must be demonstrated to meet required surveillance, e.g., capability of the DG to revert to standby status on an ECCS signal while operating in parallel test mode. The AC sources in one train must be separate and independent (to the extent possible) of the AC power sources in the other train. For the DGs, separation and independence are complete.

ACTIONS B.3.1 AND B.3.2

B.3.1 provides an allowance to avoid unnecessary testing of operable DG(s). If it can be determined that the cause of the inoperable DG does not exist on the operable DG, SR 3.8.1.2 (DG start) does not have to be performed. If the cause of inoperability exists on other DG(s), the other DG(s) would be declared inoperable upon discovery and Condition E of LCO 3.8.1 (restore one [required] DG to OPERABLE status with a 2 hour CT) would be entered. Once the failure is repaired, the common cause failure no longer exists, and Required Action B.3.1 is satisfied. If the cause of the initial inoperable DG cannot be confirmed not to exist on the remaining DG(s), performance of SR 3.8.1.2 suffices to provide assurance of continued operability of that DG.

In the event the inoperable DG is restored to operable status prior to completing either B.3.1 or B.3.2, the utility will continue to evaluate the common cause possibility, but the 24 hour constraint is no longer applicable.

According to Generic Letter 84-15, 24 hours is reasonable to confirm that the operable DG(s) is not affected by the same problem as the inoperable DG.

ACTION B.4

Action B.4 permits continued operation for a period that should not exceed 72 hours. In Condition B, the remaining operable DG and offsite circuits are adequate to supply electrical power to the onsite Class 1E distribution system. Per the current Technical Specification Bases, the 72 hour CT takes into account the capacity and capability of the remaining AC sources, a reasonable time for repairs, and the low probability of DBA occurring during this period.

COMPLETION TIME INCREASE IMPACT ON DESIGN BASIS REQUIREMENTS

This completion time change does not impact the design basis requirements of the onsite AC power source (DGs). The design of the onsite AC electrical power sources are not impacted by this change. The design will continue to provide sufficient capacity, capability, redundancy, and reliability to ensure the availability of necessary power to ESF systems so that fuel, reactor coolant system, and containment design limits are not exceeded. The operability of the AC electrical power sources will remain consistent with the initial assumptions of the accident analysis.

5.2 VITAL 120 VAC POWER SYSTEM

The 120 VAC buses are part of the onsite Class 1E AC and DC electrical power distribution system. The Class 1E AC and DC power distribution system ensure the availability of AC and DC electrical power for systems required to shut down the reactor and maintain it in a safe

condition after an anticipated operational occurrence or a postulated DBA. The vital buses typically provide power to the following equipment:

- SSPS channels
- NIS instrumentation and control power
- ESFAS slave relays
- ESFAS master relays
- Process rack protection sets
- Transmitter power supplies

The initial conditions of DBA and transient analysis in the FSAR assume ESF systems are operable. The AC, DC, and AC vital bus electrical power distribution systems are designed to provide sufficient capacity, capability, redundancy, and reliability to ensure the availability of necessary power to ESF systems so that fuel, reactor coolant system, and containment design limits are not exceeded. The operability of the AC, DC, and AC vital bus electrical power distribution system is consistent with the initial assumptions of the accident analysis and is based on meeting the design basis of the unit. This results in maintaining power distribution systems operable during accident conditions in the event of:

- an assumed loss of all offsite power or all onsite AC power
- a worst case single failure.

Maintaining the AC, DC, and AC vital bus electrical power distribution subsystem operable ensures that the redundancy incorporated into the design of ESF is not defeated. Therefore, a single failure within any system or within the electrical power distribution subsystems will not prevent safe shutdown of the reactor.

Operable AC electrical power distribution subsystems require the associated buses, load centers, motor control centers, and distribution panels to be energized to their proper voltages. Operable vital bus electrical power distribution subsystems require the associated buses to be energized to their proper voltage from the associated inverter via inverted DC voltage, inverter using internal AC source, or Class 1E constant voltage transformer. Tie breakers between redundant safety related vital bus power distribution subsystems must be open. This maintains independence of distribution systems.

ACTION B.1

With one AC vital bus inoperable, the remaining operable AC vital buses are capable of supporting the minimum safety functions necessary to shut down the unit and maintain it in the safe shutdown condition. The overall reliability is reduced since an additional single failure could result in the minimum required EFS functions not being supported. The required AC vital bus must be restored to operable status within 2 hours.

A vital bus without power potentially represents nonfunctioning of both the DC source and the associated AC source. Since in this situation the unit may be significantly more vulnerable to a complete loss of all non-interruptible power a 2 hour limit is imposed. This 2 hour CT takes

into account the importance to safety of restoring the AC vital bus to operable status, the redundant capability afforded by the other operable vital buses, and the low probability of a DBA occurring during this period.

COMPLETION TIME INCREASE IMPACT ON DESIGN BASIS REQUIREMENTS

This completion time change does not impact the design basis requirements of the vital AC buses or associated distribution system. The design of the vital AC power buses, sources of power to the buses, or associated distribution system are not impacted by this change. The design will continue to provide sufficient capacity, capability, redundancy, and reliability to ensure the availability of necessary power to ESF systems so that fuel, reactor coolant system, and containment design limits are not exceeded. The operability of the vital AC buses will remain consistent with the initial assumptions of the accident analysis.

6 SYSTEM DESCRIPTIONS

The following provides descriptions of the onsite AC electrical power sources of the electrical power system and the vital AC bus distribution system for each of the plants participating in the CT extensions. This includes system descriptions for the following plants:

Onsite AC Electric Power Sources

- Callaway
- Catawba
- Comanche Peak
- Ginna
- McGuire
- Sequoyah
- Shearon Harris
- Summer

Vital AC Bus Distribution

- Catawba
- Ginna
- McGuire
- Sequoyah
- Summer

6.1 ONSITE AC ELECTRICAL POWER SOURCES

CALLAWAY

The onsite ESF power distribution system consists of two trains with one 4.16 KVAC bus per train. Each 4.16 KVAC ESF bus (NB01 and NB02) has a dedicated DG. The offsite circuits to the ESF buses include one circuit from the start-up transformer via ESF transformer XNB02 and one circuit via ESF transformer XNB01. Callaway is a single unit site, therefore there are no cross connects to a second unit. Figure 6-1 is a diagram of the power supply system for the ESF buses.

CATAWBA

The onsite ESF power distribution system consists of two trains per unit with one 4.16 KVAC bus per train. Each 4.16 KVAC ESF bus (1ETA and 1ETB for Unit 1, 2ETA and 2ETB for Unit 2) has a dedicated DG. Each ESF bus is provided power by its respective 6.9 KVAC auxiliary power switchgear via an AC station auxiliary transformer (1ATC, 1ATD, or shared transformers SATA and SATB). The plant is capable of cross-connecting the 4.16 KVAC ESF buses between an alternate source on the same unit and from a source on the opposite unit. Figures 6-2 and 6-2a are diagrams of the power supply system for the ESF buses.

COMANCHE PEAK

The onsite ESF power distribution system consists of two trains per unit with one 6.9 KVAC bus per train. Each 6.9 KVAC bus (1EA1 and 1EA2 for Unit 1, 2EA1 and 2EA2 for Unit 2) has a dedicated DG. Each bus is provided with a preferred and alternate offsite power source. The preferred source for Unit 1 is the 345 KV switchyard via startup transformer XST2 with the alternate source the 138 KV switchyard via startup transformer XST1. The preferred source for Unit 2 is the 138 KV switchyard via startup transformer XST1 with the alternate source the 345 KV switchyard via startup transformer XST2. On loss of the preferred off-site source, the safety related buses are automatically transferred (slow transfer) to the alternate offsite power source. The design of XST1 and XST2 is such that either transformer can provide power to both units simultaneously. The plant is not capable of cross-connecting the ESF buses between units. Figure 6-3 is a diagram of the power supply system for the ESF buses.

GINNA

The onsite ESF power distribution system consists of two trains with two 480 VAC buses per train. Each set of 480 VAC buses (buses 14 and 18 for train A and buses 16 and 17 for train B) has a dedicated DG. Each ESF bus is normally provided power from its respective station auxiliary transformer (SAT 12A to 480 VAC buses 14 and 18, and SAT 12B to 480 VAC buses 16 and 17), although cross connects between transformers and ESF buses are possible. Ginna is a single unit site, therefore there are no cross connects to a second unit. Figure 6-4 is a diagram of the power supply system for the ESF buses.

MCGUIRE

The onsite ESF power distribution system consists of two trains per unit with one 4.16 KVAC bus per train. Each 4.16 KVAC ESF bus (1ETA and 1ETB for Unit 1, 2ETA and 2ETB for Unit 2) has a dedicated DG. Each ESF bus is provided power by its respective 6.9 KVAC auxiliary power switchgear via an AC station auxiliary transformer (1ATC, 1ATD, or shared transformers SATA and SATB). The plant is capable of cross-connecting the 4.16 KVAC ESF buses between an alternate source on the same unit and from a source on the opposite unit. Figure 6-5 is a diagram of the power supply system for the ESF buses.

SEQUOYAH

The onsite ESF power distribution system consists of two trains per unit with one 6.9 KVAC bus per train. Each 6.9 KVAC ESF bus (1A-A and 1B-B for Unit 1, 2A-A and 2B-B for Unit 2) has a dedicated DG. Each ESF bus is provided power by common station service transformers (CSST A, CSST B, or CSST C). The plant is capable of cross-connecting the 6.9 KVAC ESF buses between units. Figure 6-6 is a diagram of the power supply system for the ESF buses.

SHEARON HARRIS

The onsite ESF power distribution system consists of two trains with one 6.9 KVAC bus per train. Each 6.9 KVAC ESF bus (1A-SA and 1B-SB) has a dedicated DG. The offsite circuits to

the ESF buses include circuits from the unit auxiliary transformers (UAT A and UAT B) and circuits from the startup transformers (SUT A and SUT B). Shearon Harris is a single unit site, therefore there are no cross connects to a second unit. Figure 6-7 is a diagram of the power supply system for the ESF buses.

SUMMER

The onsite ESF power distribution system consists of two trains with one 7.2 KVAC bus per train. Each 7.2 KVAC ESF bus (1DA and 1DB) has a dedicated DG. The offsite circuits to the ESF buses include one circuit from the one of the two emergency auxiliary transformers (XTF31) and one circuit via transformer XTF4 in conjunction with a voltage regulator. Transformer XTF5 can also be used if necessary. Summer is a single unit site, therefore there are no cross connects to a second unit. Figure 6-8 is a diagram of the power supply system for the ESF buses.

6.2 VITAL 120 VAC POWER SYSTEM

CATAWBA

The 120 VAC vital power system consists of two buses per train with two trains per unit. Each 120 VAC vital bus (1ERPA and 1ERPC for Train A, and 1ERPB and 1ERPD for Train B) is normally supplied power from the 125 VDC power system via vital inverters. The regulated voltage transformer is the alternate power supply for the vital AC buses. Figure 6-9 is a diagram of the 120 VAC vital power system for Train A. Train B is identical to Train A.

GINNA

The 120 VAC vital power system consists of four buses. Vital bus 1A is normally supplied from Class 1E 125 VDC through inverter A. The backup supply is from Class 1E 480 VAC bus 14 via a regulating transformer. Vital bus 1B is normally supplied from Class 1E 480 VAC bus 14 via a regulating transformer with a backup from non Class 1E 480 VAC bus 13 via a regulating transformer. Vital bus 1C is normally supplied from Class 1E 125 VDC through inverter B. The backup supply is from Class 1E 480 VAC bus 16 via a regulating transformer. Vital bus 1D is normally supplied from non-Class 1E 480 VAC bus 15 via a regulating transformer with a backup from non-Class 1E 480 VAC bus 13 via a regulating transformer. The non-Class 1E bus 13 also provides power to buses 1A and 1C via regulating transformers when the supplies to buses 1A and 1C are in maintenance. Figure 6-10 is a diagram of the 120 VAC vital power system.

MCGUIRE

The 120 VAC vital power system consists of two buses per train with two trains per unit. Each 120 VAC vital bus (1EKVA and 1EKVC for Train A, and 1EKVB and 1EKVD for Train B) is normally supplied power from the 125 VDC power system via vital inverters. The regulated voltage transformers are the alternate power supply for the vital AC buses. Figure 6-11 is a diagram of the 120 VAC vital power system for Train A. Train B is identical to Train A.

SEQUOYAH

The 120 VAC vital power system consists of two buses per train with two trains per unit. Each 120 VAC vital bus (1-I and 1-II for Train A, and 1-III and 1-IV for Train B) is normally supplied power from a 480 VAC source with a DC backup via inverters. A spare AC and battery backed power source can be aligned to any of the vital AC buses. Figure 6-12 is a diagram of the 120 VAC vital power system for Train A. Train B is identical to Train A.

SUMMER

The 120 VAC vital power system consists of two trains with three buses per train. Each 120 VAC vital bus (APN5901, APN5902, and APN5907 for Train A, and APN5903, APN5904, and APN5908 for Train B) is normally supplied power from ESF 480 VAC system via inverter static rectifiers. These rectifiers are fed from buses 1DA2 and 1DB2. The alternate power sources consists of the station batteries and battery chargers. The battery chargers are fed from 480 VAC buses 1DA2 and 1DB2. An alternate power supply to the 120 VAC buses is provided through 480/120 volt transformers from buses 1DA2 and 1DB2 for use when the inverters are out of service. Figure 6-13 is a diagram of the 120 VAC vital power system for Train A. Train B is identical to Train A.

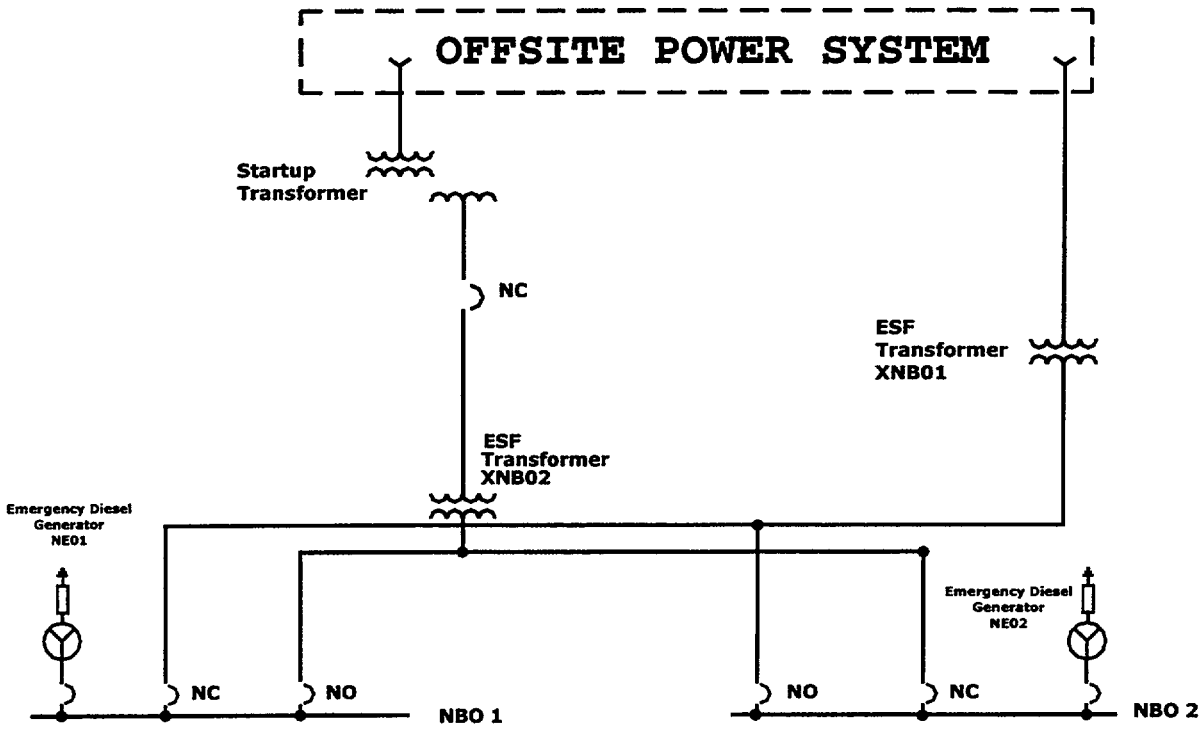

Figure 6-1 Callaway Plant Onsite Power Supply to 4.16 KVAC ESF Buses

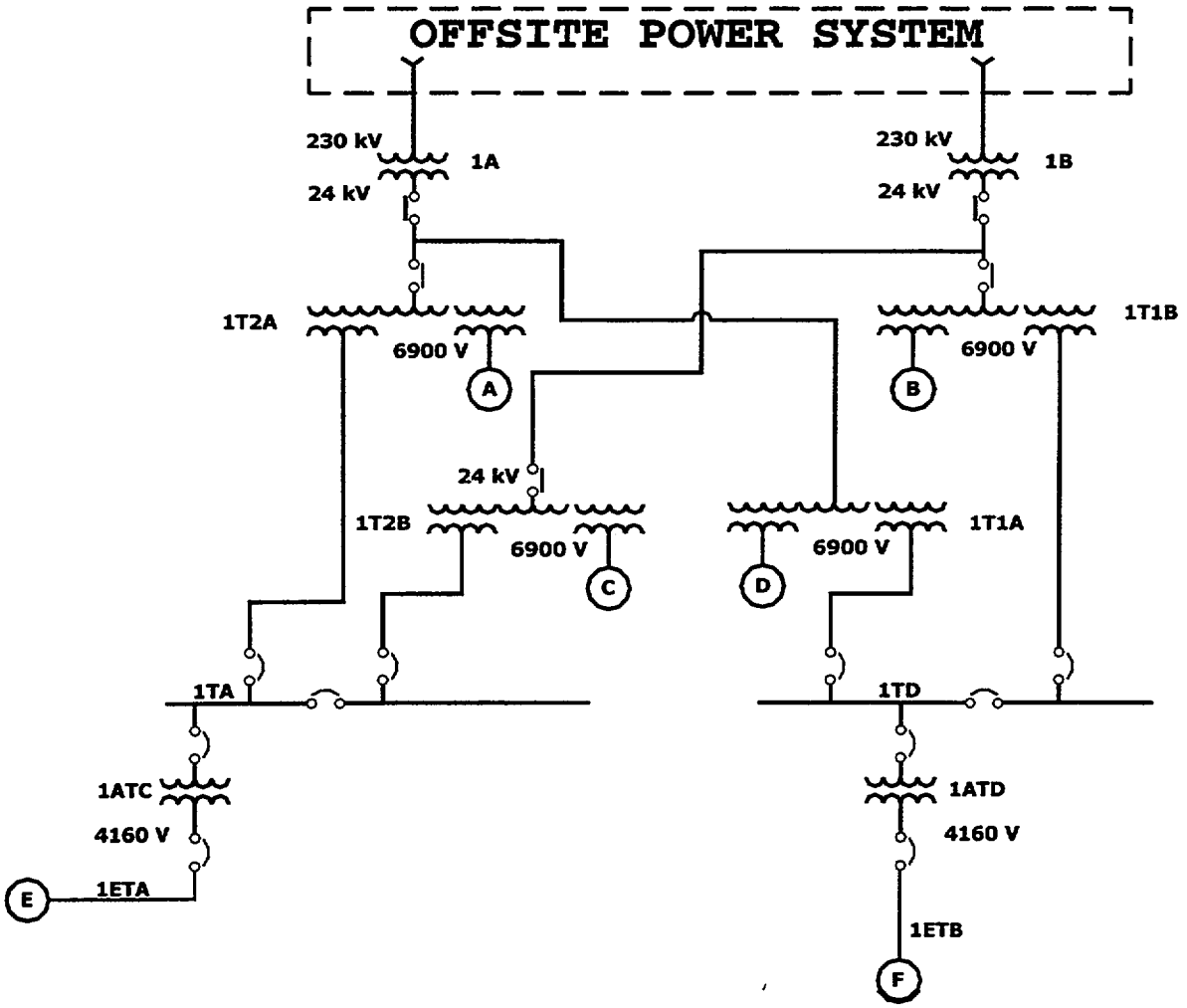

Figure 6-2 Catawba Plant Onsite Power Supply to 4.16 KVAC ESF Buses

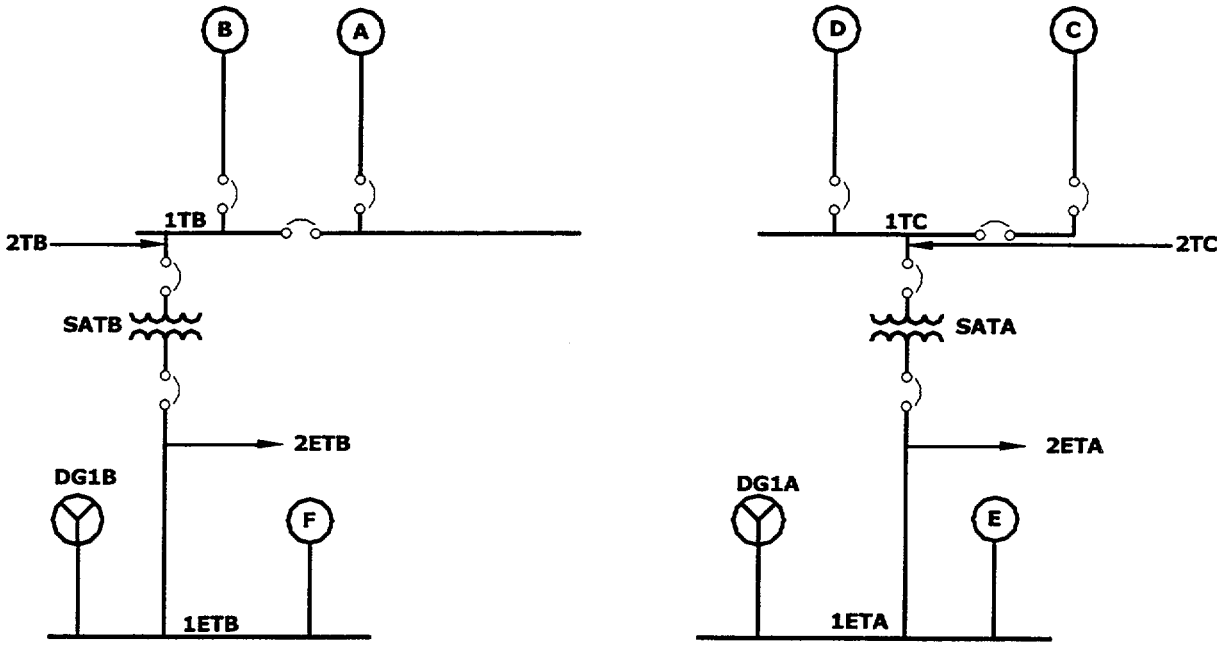

Figure 6-2a Catawba Plant Onsite Power Supply to 4.16 KVAC ESF Buses

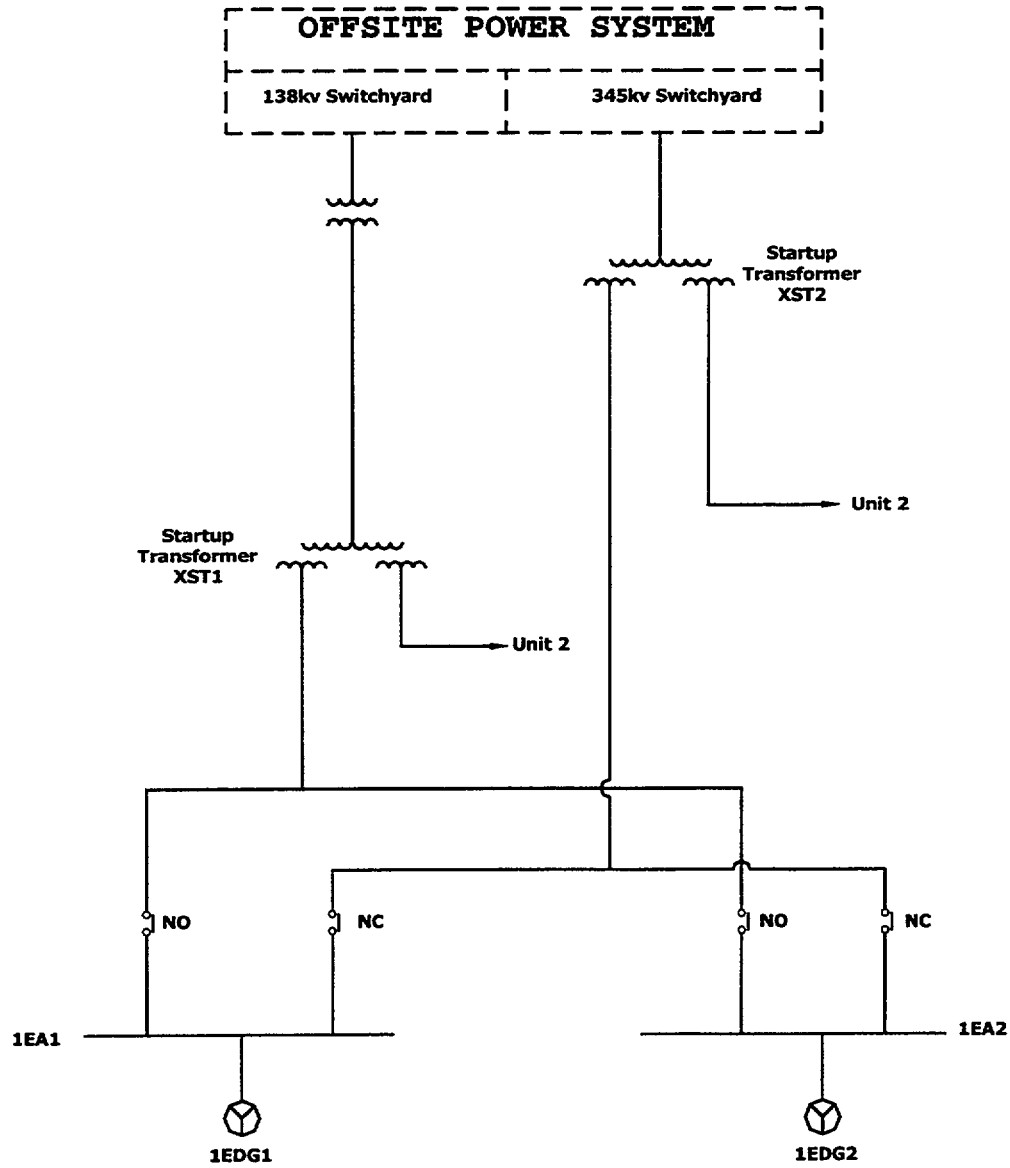

Figure 6-3 Comanche Peak Plant Onsite Power Supply to 6.9 KVAC ESF Buses

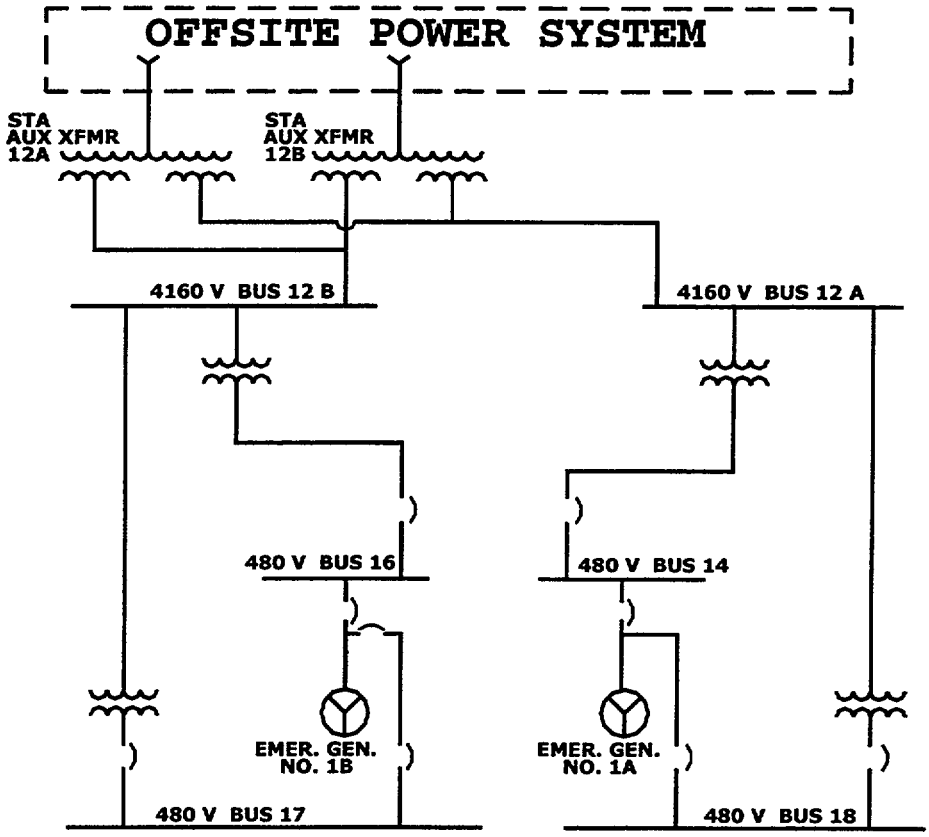

Figure 6-4 Ginna Plant Onsite Power Supply to 480 VAC ESF Buses

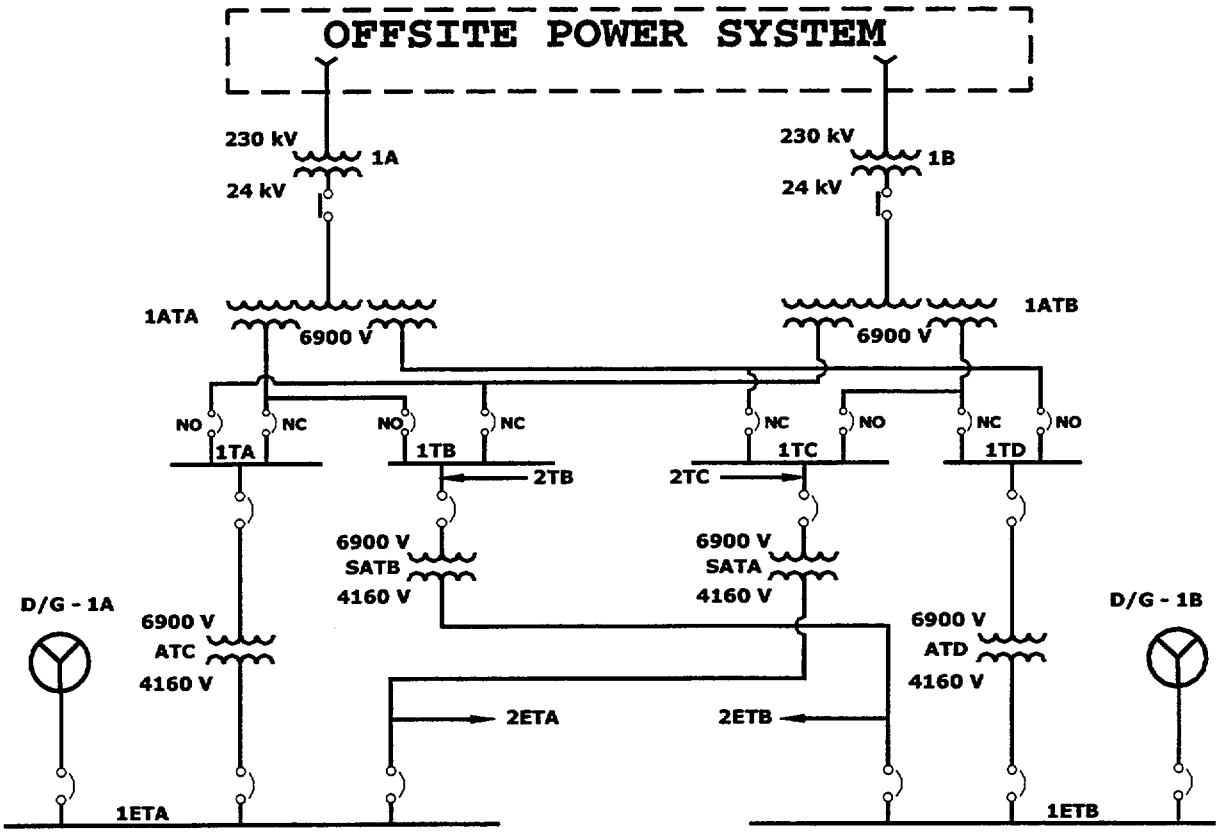

Figure 6-5 McGuire Plant Onsite Power Supply to 4.16 KVAC ESF Buses

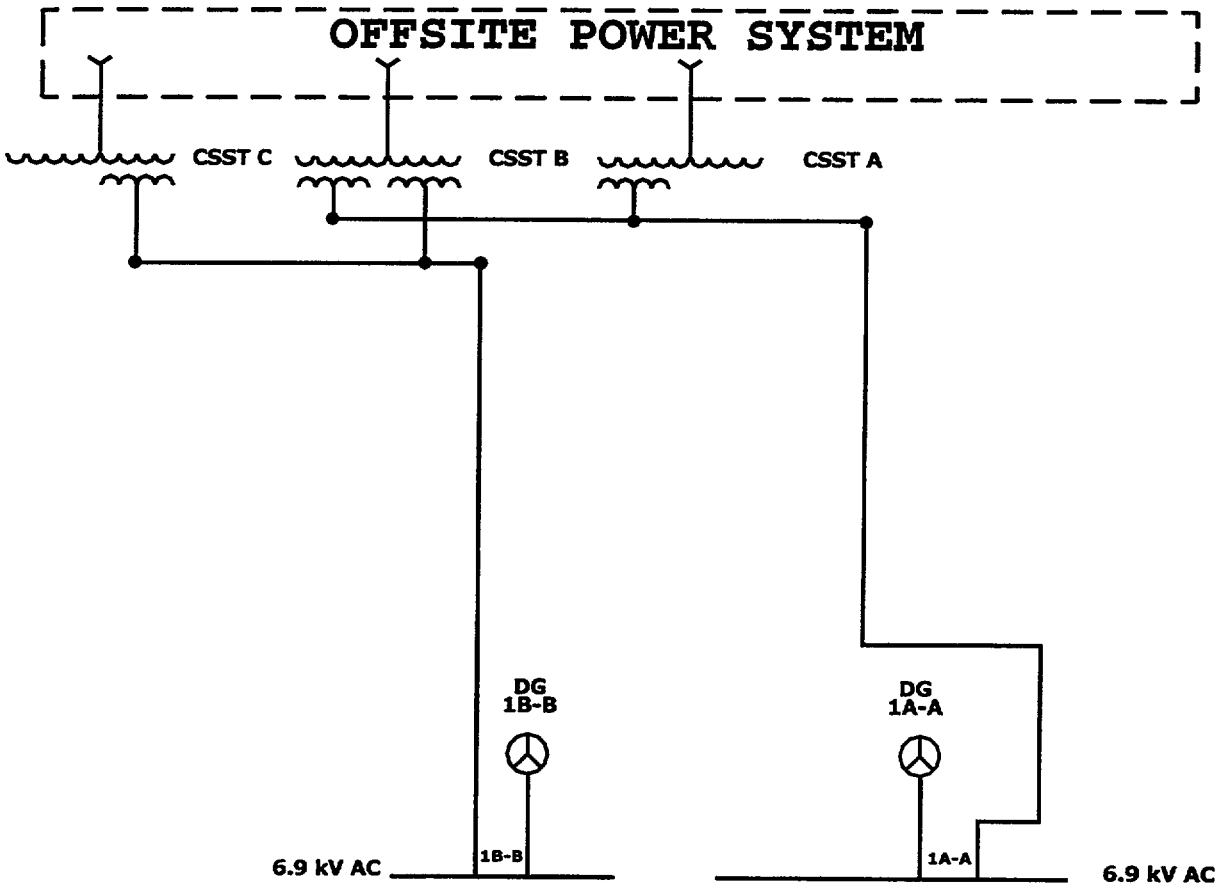

Figure 6-6 Sequoyah Plant Onsite Power Supply to 6.9 KVAC ESF Buses

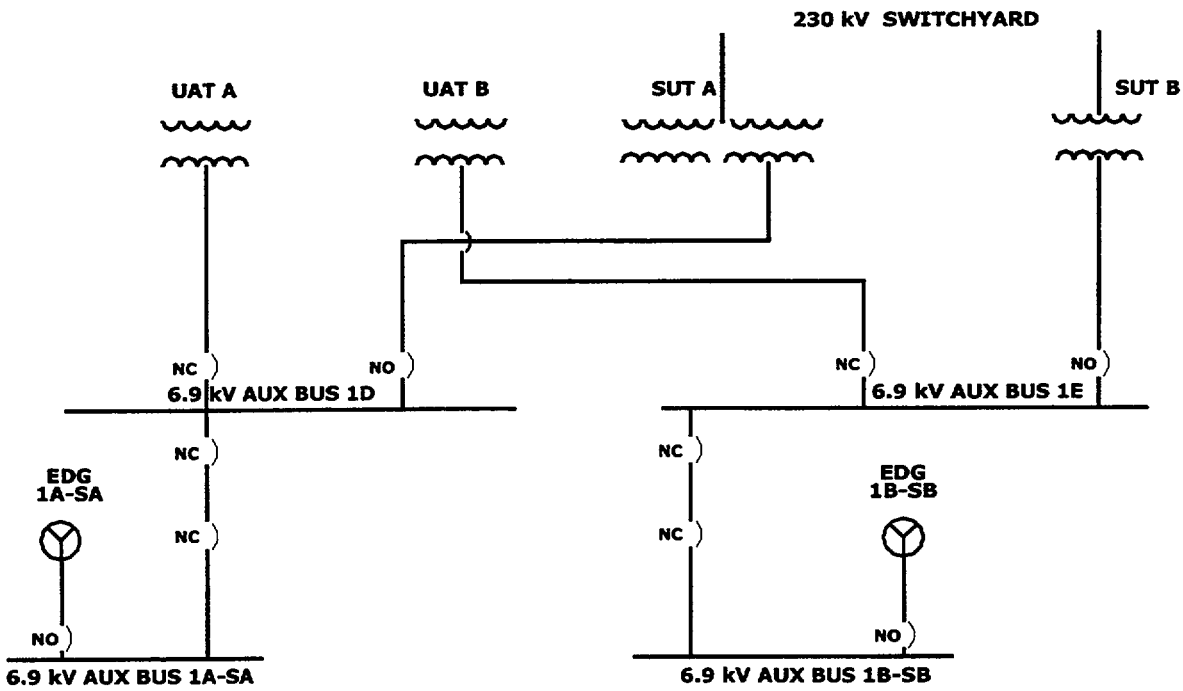

Figure 6-7 Shearon Harris Plant Onsite Power Supply to 6.9 KVAC ESF Buses

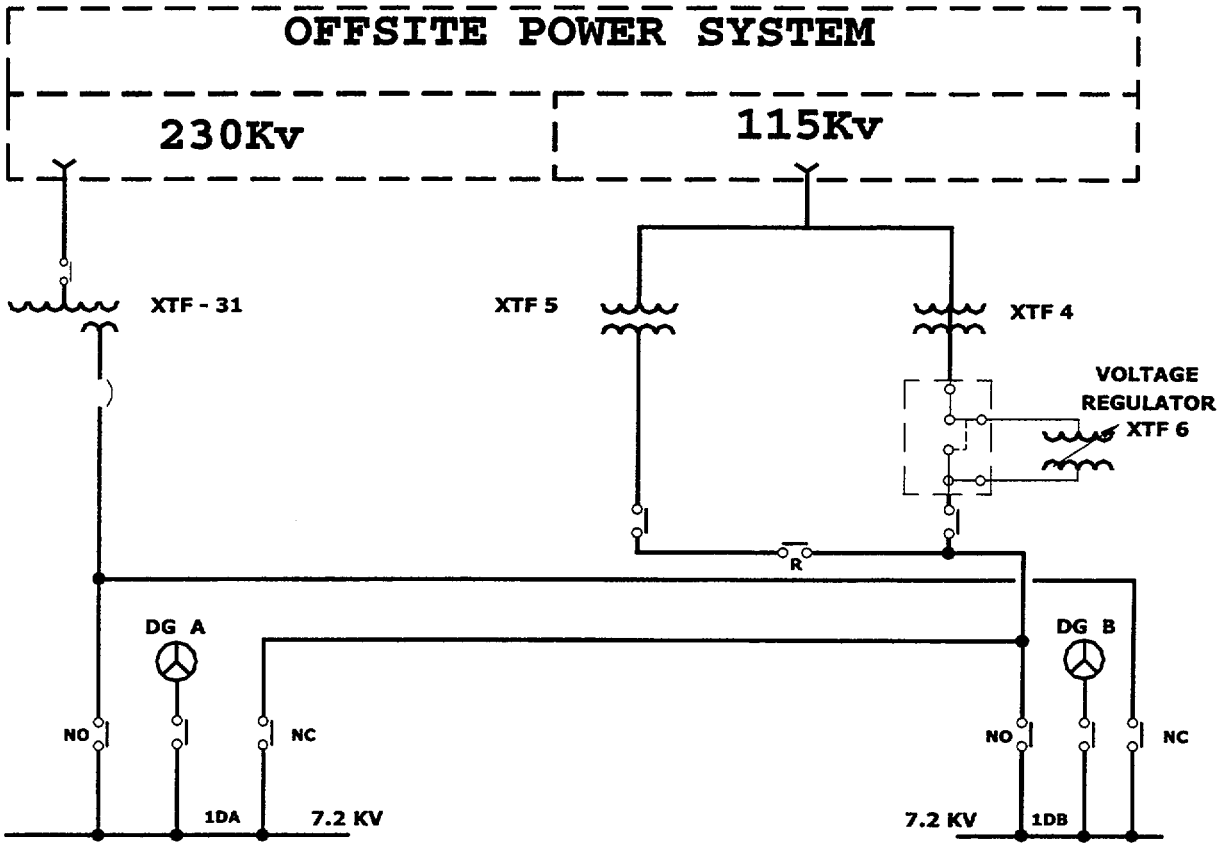

Figure 6-8 Summer Plant Onsite Power Supply to 7.2 KVAC ESF Buses

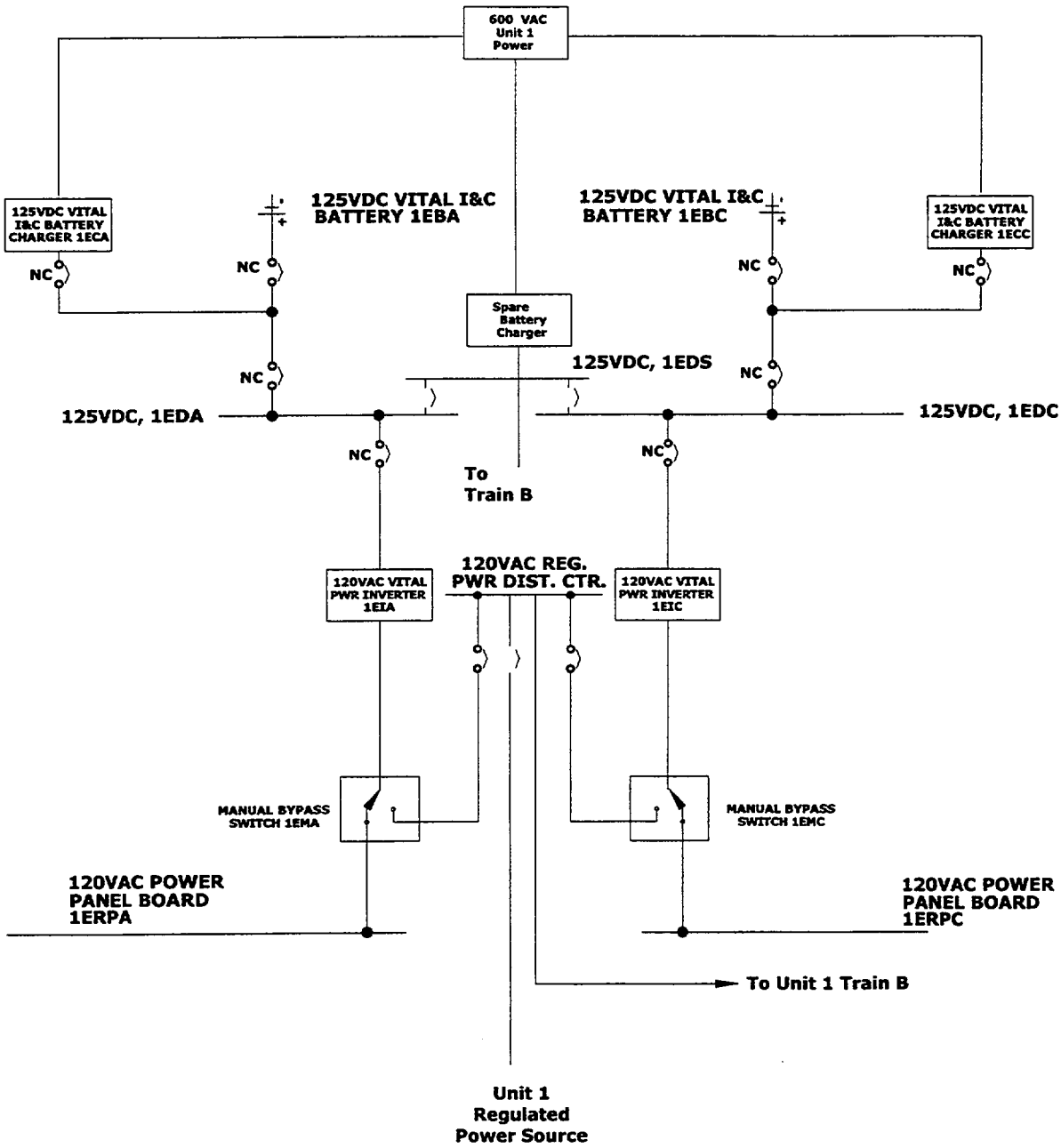

Figure 6-9 Train A Catawba Plant Vital 120 VAC Power System

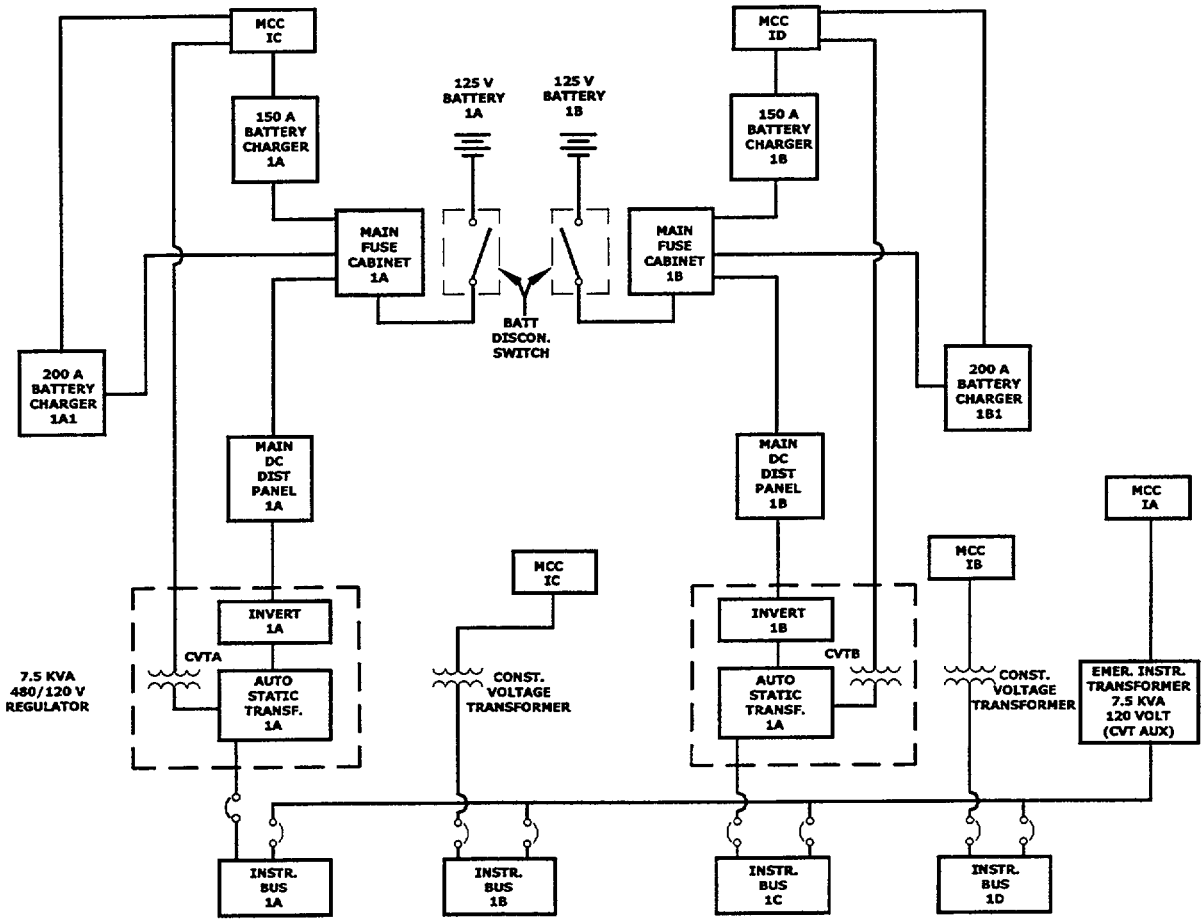

Figure 6-10 Ginna Plant Vital 120 VAC Power System

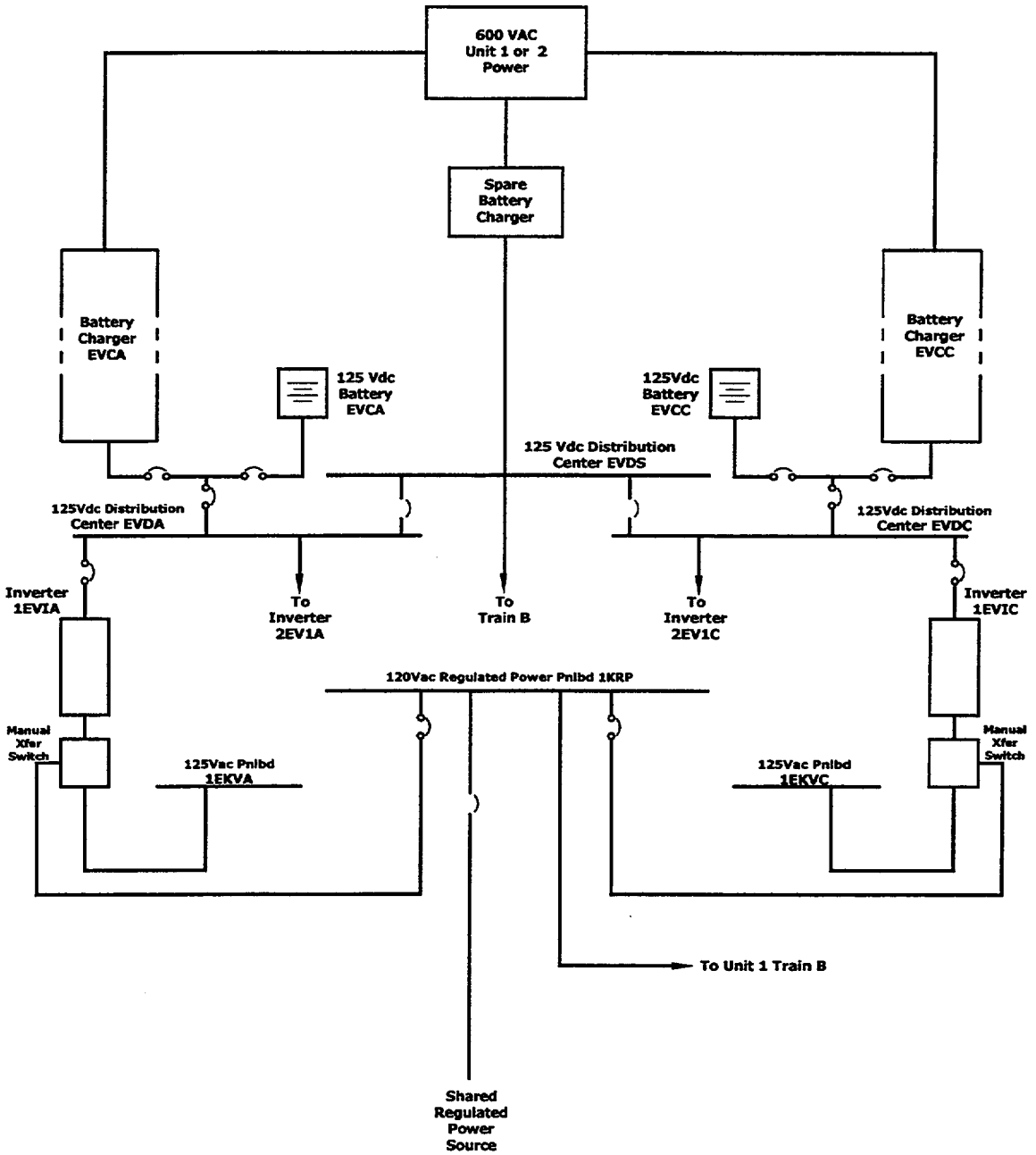

Figure 6-11 Train A McGuire Plant Vital 120 VAC Power System

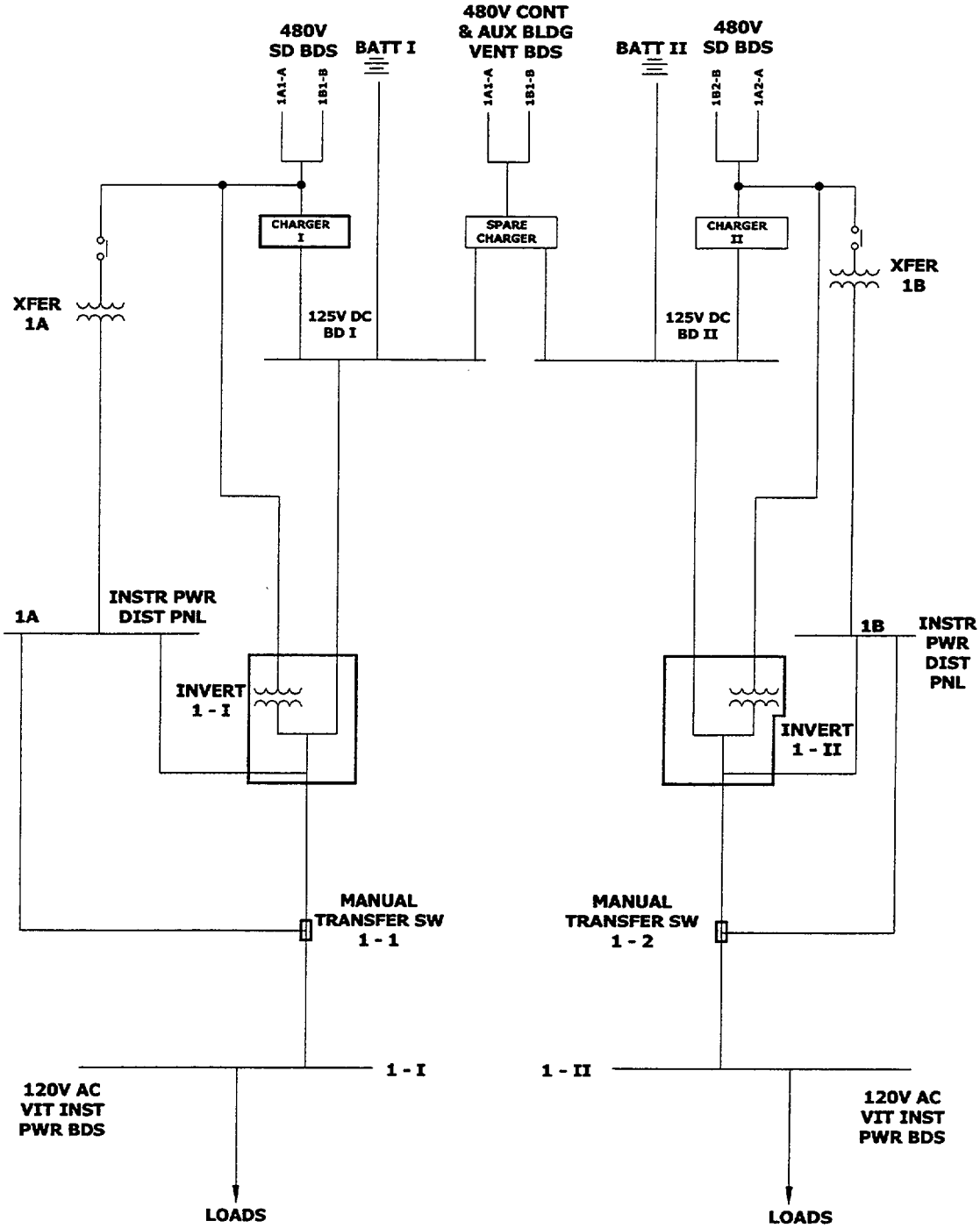

Figure 6-12 Sequoyah Plant Vital 120 VAC Power System

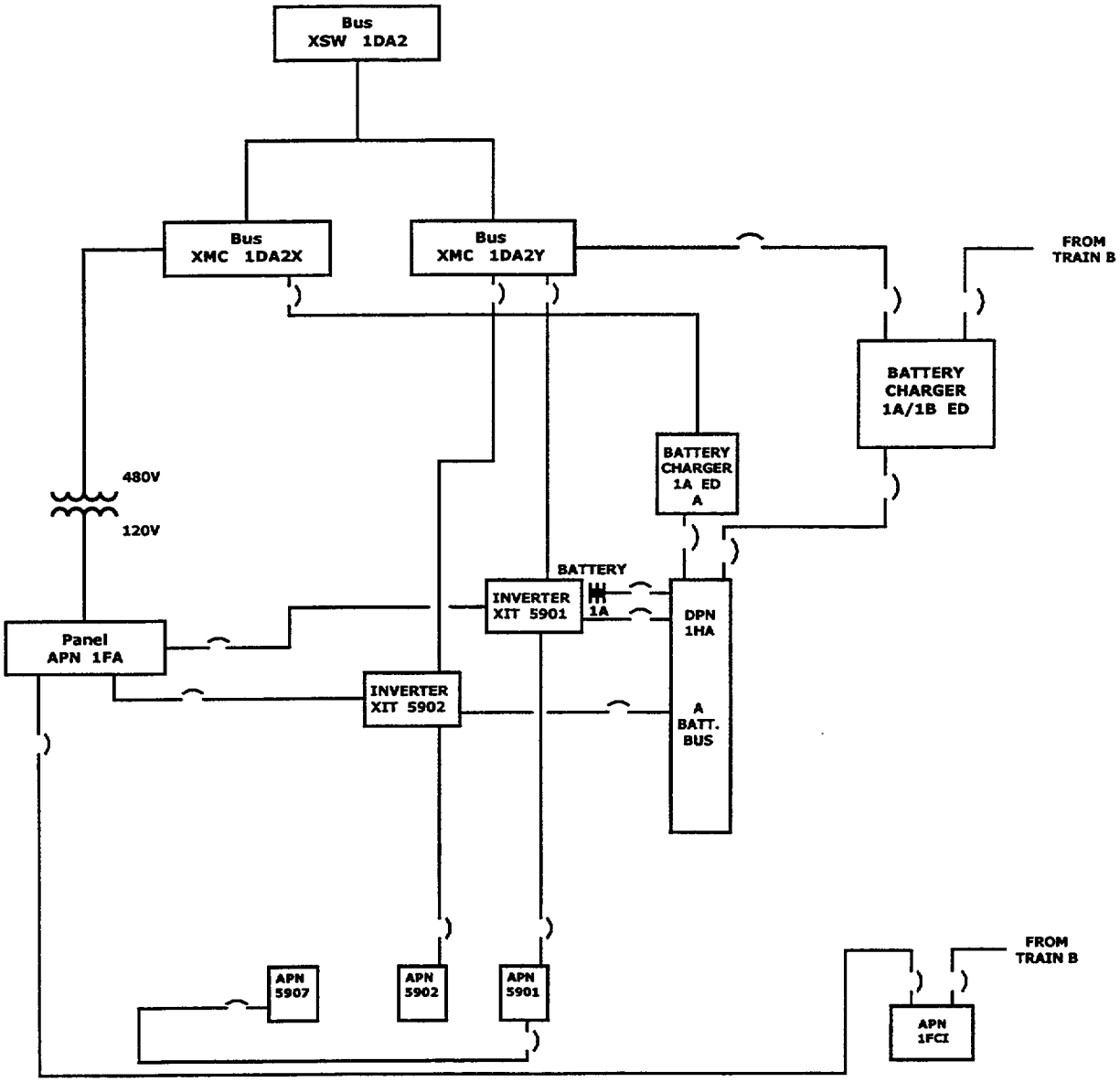

Figure 6-13 Train A Summer Plant Vital 120 VAC Power System

7 IMPACT ON DEFENSE-IN-DEPTH AND SAFETY MARGINS

In addition to discussing the impact of the changes on plant risk, as presented in Section 8, the traditional engineering considerations need to be addressed. These include defense-in-depth and safety margins. The fundamental safety principles on which the plant design is based cannot be compromised. Design basis accidents are used to develop the plant design. These are a combination of postulated challenges and failure events that are used in the plant design to demonstrate safe plant response. Defense-in-depth, the single failure criteria, and adequate safety margins may be impacted by the proposed change and consideration needs to be given to these elements.

7.1 IMPACT ON DEFENSE-IN-DEPTH

The proposed change needs to meet the defense-in-depth principle which consists of a number of elements. These elements and the impact of the proposed change on each follow:

- A reasonable balance among prevention of core damage, prevention of containment failure, and consequence mitigation is preserved.

  The proposed CT changes to the AC onsite electric power system have only a small calculated impact on CDF and LERF as discussed in Section 8. The CT changes discussed primarily impact CDF and have only a secondary effect on containment integrity, that is, as the CDF increases the LERF will increase by a similar amount. These changes do not degrade core damage prevention and compensate with improved containment integrity nor do these changes degrade containment integrity and compensate with improved core damage prevention. The balance between prevention of core damage and prevention of containment failure is maintained. Consequence mitigation remains unaffected by the proposed changes. Furthermore, no new accident or transients are introduced with the requested change and the likelihood of an accident or transient is not impacted. Some new activities may be performed on the DGs while at power, but these will not lead to new transient events. Conversely, the increase in CTs have the potential to lead to a reduction in the likelihood of maintenance or test induced transients or accidents; the additional time to complete these activities provides an atmosphere more conducive to successfully completing repair and test activities without inducing a plant event and reducing system re-alignment and re-assembly errors. In addition, moving DG test and maintenance activities to power operation reduces the risk of completing these activities while shutdown. These remain unquantified benefits of the CT changes.

- Over-reliance on programmatic activities to compensate for weaknesses in plant design.

  The plant design will not be changed with these proposed changes. All safety systems, including the onsite AC power systems, will still function in the same manner with the same reliability, and there will be no additional reliance on additional systems, procedures, or operator actions. The calculated risk increase for the CT changes is very

small and additional control processes are not required to be put into place to compensate for any risk increase.

- System redundancy, independence, and diversity are maintained commensurate with the expected frequency and consequences of challenges to the system.

  There is no impact on the redundancy, independence, or diversity of the AC systems of interest or on the ability of the plant to respond to events with diverse systems. The onsite AC power systems are diverse and redundant systems, and will remain so. The DG system and vital AC power are reliable systems and will remain so after these proposed changes.

- Defenses against potential common cause failures are maintained and the potential for introduction of new common cause failure mechanisms is assessed.

  Defenses against common cause failures are maintained. The extensions requested are not sufficiently long to expect new common cause failure mechanisms to arise. In addition, the operating environment for these components remains the same so, again, new common cause failures modes are not expected. In addition, backup systems are not impacted by these changes and no new common cause links between the primary and backup systems are introduced. With the extended CT for completing the DG CCF evaluation, a CCF condition could exist for a longer period of time on the operable DG. But as discussed in Section 3, the alternative of performing the DG surveillance to demonstrate its operability does not necessarily confirm that the operable DG will not fail for the same reason. Only identification of and understanding the root cause for the inoperable DG and confirmation it is not applicable to the operable DG will absolutely address the CCF issue. Therefore, no new potential common cause failure mechanisms have been introduced by these CT extensions.

- Independence of barriers is not degraded.

  The barriers protecting the public and the independence of these barriers are maintained. With the extended CTs it is not expected that utilities will have multiple systems out of service simultaneously that could lead to degradation of these barriers and an increase in risk to the public. In addition, the extended CT does not provide a mechanism that degrades the independence of the barriers; fuel cladding, reactor coolant system, and containment.

- Defenses against human errors are maintained.

  No new operator actions related to the CT extension are required to maintain plant safety. No additional operating, maintenance, or test procedures have been introduced or modified due to these changes. Some new activities may be performed on the DGs while at power, but these are not expected to introduce additional human errors or increase the frequency of human errors. Moving some DG test and maintenance activities to power operation reduces the risk of completing these activities while shutdown. The increase in

CTs provides additional time to complete troubleshooting, previously discussed for the vital AC buses, and test and repair activities which will lead to improved operator and maintenance personnel performance resulting in reduced system re-alignment and re-assembly errors.

7.2 IMPACT ON SAFETY MARGINS

The safety analysis acceptance criteria as stated in the FSAR is not impacted by this change. Redundant onsite power sources will be maintained as will the redundancy and diversity of the vital 120 VAC system. The proposed changes will not allow plant operation in a configuration outside the design basis. All AC power sources and distribution requirements credited in the accident analysis will remain the same.

8 ASSESSMENT OF IMPACT ON RISK

This section presents the analysis and assumptions used in determining the impact on plant risk of increasing the completion times specified in Section 4. This section addresses the three tiered approach to the evaluation of risk-informed Technical Specification changes. The three tiered approach is defined in Regulatory Guide 1.177. The first tier, discussed in Sections 8.1 to 8.4, addresses PSA insights and includes the risk analyses and sensitivity analyses to support the completion time changes. The second tier, which addresses avoidance of risk-significant plant configurations, is not addressed in this report, but will be addressed by each utility in their plant specific License Amendment Request to request this CT change. The third tier, which addresses risk-informed plant configuration control and management, is covered by each utility's Maintenance Rule Program.

8.1 TIER 1: APPROACH TO THE EVALUATION

The Tier 1 analysis provides the impact of the CT changes on CDF and ICCDP. The impact of these changes on the containment risk metrics, LERF and ICLERP, were not evaluated in this analysis. The primary impact of the CT changes being considered is on CDF, the level 1 PRA measure. These changes do not independently impact containment systems, such as, containment cooling or sprays. That is, if a train of emergency AC power (DGs) is removed from service, the systems preventing containment failure are not impacted independent of the impact on the systems used to prevent core damage. Therefore, quantifying the impact of these CT changes on the containment risk metrics does not provide additional information that is important to the decision process. The primary impact is measured by the change in CDF and ICCDP. In addition, LERF is typically dominated by containment bypass events, such as, steam generator tube rupture and interfacing systems LOCAs. Contributions of these events to LERF will not be impacted by the unavailability increases in the AC systems being evaluated since a SGTR or interfacing systems LOCA with loss of offsite power is a very low frequency event.

Plant specific risk analysis is required to evaluate the impact of the CT changes on plant risk being considered in this program due to differences in plant designs and operating history at the plants. A process was developed to use plant specific PRA models following a predefined methodology. This approach ensures that each participating utility completes the risk analysis on a consistent basis and direct comparisons between plant specific results are valid. The general approach used in this program includes ten basic steps. These are:

Step 1: Identify the Technical Specification Completion Time improvements of interest

Step 2: Determine the impact on plant safety

Step 3: Identify the impact of the change on the plant PRA model

Step 4: Modify the plant PRA model and completion time related parameters

Step 5: Identify the risk measures

Step 6: Quantify the plant specific PRA model

Step 7: Preliminary results collection and discussion

Step 8: Final results collection and review

Step 9: Identify change requests

Step 10: Documentation

Details of each step are further discussed in Appendix C.

There are three key parts to this process to ensure the analyses are done on a consistent basis between utilities. These are: 1) defining the specific analysis requirements, 2) utility plant specific evaluations following the defined specific analysis requirements, and 3) review of the plant specific results. These are discussed in detail in the following sections.

DEFINE SPECIFIC MODEL AND ANALYSIS REQUIREMENTS

The specific modeling requirements for the plant PRA models for each CT extension being evaluated are defined in this part of the process as well as the calculations that are required to be completed. This includes identifying the impact of the CT change on the model and the appropriate modeling for maintenance and test activities with and without the CT extension. Also included is a review of the PRA model with regard to the system of interest to ensure it properly models the system in plant operation and event mitigation, and to ensure the correct failure modes for the system are included. Consideration also needs to be given to the use of plant specific as opposed to generic data. A critical piece of the evaluation is defining the approach for determining the impact of the CT change on system and/or component test and maintenance unavailability.

UTILITY PLANT SPECIFIC EVALUATIONS

In this part of the evaluation the utility is required to modify their plant specific PRA model to be consistent with the specific model and analysis requirements previously defined, and complete the required analysis to determine the impact of the CT changes on the relevant risk parameters. This could include changes in the areas of:

- Plant response tree (event tree) modeling
- System unavailability modeling
- Component reliability
- Test and maintenance unavailabilities

The impact of the CT changes on test and maintenance unavailabilities are a critical area of the analysis. The primary changes in the evaluation are the test and maintenance unavailabilities to reflect the longer CTs. As previously noted, the longer CTs allow utilities to perform additional test and maintenance activities at power or take more time to complete current at-power activities. It is necessary to reflect these changes in the test and maintenance unavailabilities used in the PSA models. Regulatory Guide 1.177 (Section 2.3.3.1) provides the following direction:

"Changes to the component unavailability model for test downtime and maintenance downtime should be based on a realistic estimate of expected surveillance and maintenance practices after the TS change is approved and implemented, e.g., how often is the AOT expected to be entered for pre-planned maintenance or surveillance.

The component unavailability model for test downtime and maintenance downtime should be based on plant-specific or industry-wide operating experience, or both, as appropriate."

To be consistent with the Regulatory Guide, realistic test and maintenance times with the extended CT have been used instead of assuming that the full CT will always be used. In short, utility personnel need to identify how the longer CTs will be used. The extended CT could be used to allow additional time to complete repair activities or to move scheduled maintenance activities that are currently completed while the plant is shutdown to power operation. Details of this are provided and discussed in the Step 4 of the general process for evaluating the safety impact of change to completion times (see Appendix C).

REVIEW OF PLANT SPECIFIC RESULTS

The results for the utility plant specific evaluations are collected, reviewed, evaluated, and discussed. This part of the process provides assurance that the plant models and analyses are completed consistent with each other and that they meet the previously defined analysis requirements. If significant differences between analyses do exist, utilities complete additional plant specific quantifications or sensitivity evaluations to determine the importance of the differences. This step ensures that the plant models and results are consistent. In those cases where differences do exist, the differences and the impact of these differences on the results are understood.

Based on the general approach developed for assessing the impact of completion time changes on plant risk, specific requirements were developed for each specific CT being considered. Three specific CT extensions defined in Section 4 are included in this WCAP. Appendices D, E, and F contain the detailed evaluation process for each of these CT extensions. The results for each are discussed in Sections 8.2, 8.3, and 8.4.

8.2 LCO 3.8.1, RESTORE DIESEL GENERATOR TO OPERABLE STATUS

Condition B of LCO 3.8.1 defines the requirements for the DG operability. Required Action B.4 requires restoring the DG to operable status with a CT of 72 hours. The following evaluates extending this time to 7 days. The reasons for requesting this change are discussed in Section 3. Appendix D contains the details of the evaluation process for this completion time increase.

The following plants participated in evaluating this CT extension:

- Callaway
- Catawba
- Comanche Peak
- McGuire

- Shearon Harris
- Summer

The Class 1E AC electrical power distribution system AC sources consists of the offsite power sources and the onsite standby power sources. DGs are used as the onsite power sources. The DGs are required to provide power to the Class 1E AC systems in the event that offsite power is lost to these systems. The DGs are of particular importance following a loss of offsite power event. During this event, the DGs are required to start and run, and supply power to safely shut down the plant if the plant is at-power when offsite power is lost or maintain the plant in a safe shutdown condition if the plant is shutdown when offsite power is lost. If the DGs are unavailable or fail to start and run, then a station blackout situation exists. Under a station blackout condition, decay heat removal will continue by the turbine-driven auxiliary feedwater pump if a steam supply to the pump is available (plant Modes 1-4). If the plant is shutdown, then decay heat removal by the RHR system will be lost until offsite power is restored. The RHR system is used for heat removal in Modes 5 and 6. During a station blackout, cooling to the RCP seals will also be interrupted and a seal LOCA with subsequent core uncovery and core damage may occur. This event is of particular importance when the RCS temperature and pressure are high. These issues are discussed in more detail in Section 8.2.5 and 8.2.6.

8.2.1 Impact of the Extended Completion Time

As noted above, the parameters that are impacted by the CT changes are the diesel generator unavailabilities due to test and maintenance activities. With the extended CTs utilities may complete additional test and scheduled maintenance activities while they are at-power or repair activities may now take longer to complete since round-the-clock repair efforts may be delayed. Each utility is required to assess the impact of the extended CTs on the availability of the DG when at power. The following is a summary of these assessments:

CALLAWAY

The only anticipated change will be an additional 3 days of outage time per cycle per DG to complete additional maintenance activities at-power which are currently done when the unit is shut down. Based on this, it is estimated that the cycle mean downtime per DG will increase from 223 hrs/cycle to 295 hrs/cycle which equates to an increase from 157 hrs/yr to 208 hrs/yr.

CATAWBA

Planned maintenance on the DGs and support systems impacting the DGs are currently completed during power operation and outages. Planned maintenance activities that are currently being performed within the 72 hours CT are not expected to change. However, the total hours of scheduled (planned) activities is expected to increase up to double the current number of hours since some DG testing currently being performed during the outage may be moved to power operation. Based on this, it is estimated that the yearly downtime will increase from 114 hrs/yr up to a maximum of 175 hrs/yr per DG, which is half of the Maintenance Rule unavailability limit.

COMANCHE PEAK

The primary use of the additional time is expected to be for preventive maintenance activities. Included are 18 month refueling overhauls on the DGs, and 5 year and 10 year major overhauls. Currently this work is done when the units are shutdown. The Comanche Peak PRA model currently includes 11 hours of preventive maintenance and 22 hours corrective maintenance, and 96 hours of test unavailability per cycle for a total DG unavailability due to test and maintenance activities of 129 hours per cycle. With this AOT extension, on the average, another 168 hours DG unavailability will be incurred every cycle for additional DG maintenance activities. This will increase the DG unavailability to 324 hours per cycle.

MCGUIRE

The primary use of the additional time is expected to be for corrective maintenance activities. Several corrective maintenance activities in the past have approached the 72 hour limit and an extended CT will provide a larger cushion for completing these activities. Although routine or scheduled planned maintenance activities are done during power operation and outages at McGuire, there are no current plans for moving the activities currently completed in an outage to power operation nor is it planned to move outage testing to power operation. Current maintenance activities performed during power operation are not expected to change. The current number of planned entries into this LCO may decrease with the extended completion time, with each entry being longer, but the total planned outage time per cycle is expected to remain the same. Based on this, it is estimated that the yearly downtime will increase from 91 hrs/yr up to a maximum of 175 hrs/yr per DG, which is half of the Maintenance Rule unavailability limit.

SHEARON HARRIS

Planned maintenance and testing activities are currently done with the plant at-power. The individual maintenance and testing activities are grouped into packages such that the total time with a DG inoperable does not exceed 50% of the current 72 hour completion time. This is not expected to be impacted with an extended CT. However, with the extended CT an additional package may be developed and completed during power operation. The total expected time to complete this additional package of activities is estimated to be 5 days. Note that this cannot be done with the current 72 hour CT. The frequency of this package is once per DG per 5 years. Based on previous operating history, the extended CT is not expected to impact the time to complete repair activities. The mean time to repair for repair activities from December 1995 to March 2000 is 3.4 hours with the longest duration of 11.3 hours. Since the repairs times are well within the current CT, an extended CT is not expected to impact the repair time. Based on this additional work package, it is estimated that the yearly downtime per DG will increase from 140 hrs/yr to 164 hrs/yr.

SUMMER

Scheduling of maintenance activities is done within an administrative restriction which allows scheduling only one third of the CT or half of the CT with management approval. The extend

DG completion time will allow some outage work to be moved during power operation. The current longest scheduled online task duration is about 2 days and the current outage activities are done in a 3 day window. It is expected that additional work moved to power operation would be scheduled in conjunction with the current work tasks and extend a DG outage by about 1 day per cycle. Based on this, it is estimated that the yearly downtime per DG will increase from 161 hrs/yr to 177 hrs/yr.

8.2.2 Plant Specific Risk Results

The results for the participating plants, in terms of the impact of the CT extension on CDF and ICCDP, are shown Table 8-1. These values were calculated by each utility following the method described in Appendix D using their plant specific PRA model.

The analysis assumptions and PRA modeling features, as well as the plant design are important when assessing the impact of increasing DG outage times and making comparisons between plants. Modeling assumptions and features that may be important are the reliability of the DGs, common cause failure model, and the RCP seal LOCA model. Design features that reduce the probability of station blackout events, such as the ability to crosstie electrical systems to another unit, reduce the importance of the availability of any one DG. Systems or components dedicated to maintaining RCP seal cooling during station blackout (SBO) events also reduce the importance of DGs. Table 8-2 provides a summary of the important assumptions and modeling features in the plant specific PRA models. Table 8-3 provides a summary of plant design features important to preventing core damage events following loss of offsite power events.

8.2.3 Discussion of Results by Plant

The following discusses the results for each plant and also the assumptions, PRA modeling, and design features important to each plant with regard to this completion time extension. This includes the following:

- Credit for electrical power crossties between units at multi-unit sites
- Class 1E AC power distribution system
- Basis for the loss of offsite power initiating event frequency
- Loss of offsite power plant experience
- Reactor coolant pump seal LOCA model
- Availability of alternate AC power sources
- SBO contribution to CDF

8.2.3.1 Callaway Results Discussion

The Callaway analysis assumes that the CT increase will be used primarily for doing additional scheduled maintenance activities, currently done when shutdown, while at-power. An additional 3 days of outage time per DG is expected to be required to complete these activities while at-power. The CT increase is not expected to result in an increase in the time to complete repair activities that can currently be completed within the 72 hour CT.

The impact of this CT change on CDF is slightly greater than the 1E-06/yr guideline for a small change as defined in Regulatory Guide 1.174 (see Table 8-1), but this does not account for a decrease in shutdown CDF associated with moving these activities out of shutdown operation. The shutdown risk averted is discussed in Section 8.2.6. The ICCDP values are also slightly larger than the 5E-07 guideline in Regulatory Guide 1.177 (see Table 8-1). This assumes that the total seven days will be used, while at most six days will be used at any one time for scheduled maintenance activities. The internal event CDF for Callaway is approximately 3.3E-05/yr which is below the threshold for limiting plant changes that result in a small increase in CDF. The WOG RCP seal LOCA model is used to model seal LOCAs during SBO events. The sensitivity of results to the RCP seal LOCA model are discussed in subsection 8.2.5. The following provides the plant design and PRA model information important in this analysis.

Credit for electrical power cross connects: The plant is a single unit site, so there is no credit for a crosstie to another unit if offsite power is lost.

Class 1E AC electrical power system design: The electrical power system consists of two redundant 4160 VAC Class 1E safety trains with each powered by a single DG.

Basis for LOSP IE Frequency: The LOSP initiating event frequency is taken from EPRI TR-110398, "Losses of Off-Site Power at U.S. Nuclear Power Plants – Through 1997" (Reference 3).

Loss of offsite power plant experience: The plant has experienced no LOSP events.

Reactor coolant pump seal LOCA model: The RCP seal LOCA model is based on the WOG model described in WCAP-10541, "Reactor Coolant Pump Seal Performance Following a Loss of All AC Power" (Reference 4). The probability of core uncovery at 1 hour following loss of all seal cooling is 3.13E-03.

Availability of alternate AC power source: None are available.

SBO contribution to CDF: The SBO contribution to CDF from the IPE is 1.77E-05/yr. This corresponds to a SBO contribution from the current plant PRA model of 1.46E-05/yr. Both of these values are based on a 72 hour CT. The difference in values is primarily due to the reduction in LOSP frequency. The SBO contribution with a 7 day CT is 1.55E-05/yr. The increase is due to the additional activities expected to be performed while at-power. The DG fail to start and fail to run values are provided on Table 8-2. These values are the same for the IPE and current PRA model.

8.2.3.2 Catawba Results Discussion

The Catawba analysis assumes that the CT increase will be used primarily for doing additional planned activities, currently done when shutdown, while at-power. Roughly, the outage time for planned activities is expected to double with this CT change. Up to 60 hours of additional outage time per DG per year is expected to complete maintenance activities while at-power.

The CT increase is not expected to result in an increase in the time to complete repair activities that can currently be completed within the 72 hour CT.

The impact of this CT change on CDF is 2.5 times greater than the 1E-06/yr guideline for a small change as defined in Regulatory Guide 1.174 (see Table 8-1), but this does not account for a decrease in shutdown CDF associated with moving these activities out of shutdown operation. The shutdown risk averted is discussed in Section 8.2.6. The ICCDP values are also larger than the 5E-07 guideline in Regulatory Guide 1.177 (see Table 8-1). This assumes that the total seven days will be used, while any single planned outage is expected to be four days or less. The internal event CDF for Catawba is approximately 5.2E-05/yr which is below the threshold for limiting plant changes that result in a small increase in CDF. The WOG RCP seal LOCA model is used to model seal LOCAs during SBO events. The sensitivity of results to the RCP seal LOCA model are discussed in subsection 8.2.5. The following provides the plant design and PRA model information important in this analysis.

Credit for electrical power cross connects: The plant is a dual unit site and is capable of cross-connecting the redundant engineered 4160 VAC safety buses between an alternate source on the same unit and from a source on the opposite unit. This is modeled as a recovery action in the PRA model.

The Operators are trained to perform these cross connections per approved procedures. In addition, the operators are familiar with these alignments since they are made during each refueling outage. Licensed Operations personnel have simulated the control room portion and non licensed Operators have walked and simulated the plant breaker manipulations. Approximately twenty minutes is required to complete the alignment. It was performed with only one team of Operators (the Operators had to walk between the 6900 V and essential 4160 V switchgear rooms). Several minutes could be removed from the estimate if two teams of Operators were utilized, one at each location. It was assumed both units were in normal electrical alignment prior to the event, and that offsite power and 6900 V buses were energized.

To estimate the credit taken for the crosstie on CDF, a sensitivity study was performed. Removing credit for the crosstie resulted in a CDF of 5.60E-05/yr versus the base case CDF of 5.17E-05/yr. The resulting CDF increase is 4.30E-06/yr.

Class 1E AC electrical power system design: The electrical power system consists of two redundant 4160 VAC Class 1E safety trains with each powered by a single DG. As discussed above, crossties to the other unit are available.

Basis for LOSP IE Frequency: Data is based on EPRI TR-106306, "Losses of Off-Site Power at U.S. Nuclear Power Plants – Through 1995" (Reference 5). There were 20.8 years of operating experience at Catawba during the EPRI data period. No plant LOSP events occurred during the period covered by EPRI TR-106306 (1980-1995), however, there was a single unit LOSP event at Catawba in February of 1996. This event is included in the Catawba specific history (in the Bayesian update process) as if it had occurred during the EPRI TR-106306 data period. This resulted in a Bayesian updated LOSP frequency for Catawba of 3.59E-02/yr.

Loss of offsite power plant experience: February 6, 1996: With Unit 2 operating at 100% power, ground faults on the resistor bushings for 2A Main transformer X phase potential transformer and 2B Main Transformer Z phase potential transformer resulted in a phase to phase fault. Protective relay actuation on both Main Transformers resulted in a LOSP. The root cause was attributed to the incorrect application of this type of resistor bushing, and the lack of adequate preventative maintenance to prevent moisture intrusion, and condensation problems. (See LER 414/96-01)

Using the same 20.8 years of operation at Catawba in the EPRI study (through 1995) with one event results in a frequency of 4.81E-02/yr. Including the plant experience through 1999 results in a LOSP frequency of 3.47E-02/yr.

Reactor coolant pump seal LOCA model: The RCP seal LOCA model is based on the WOG model described in WCAP-10541, "Reactor Coolant Pump Seal Performance Following a Loss of All AC Power." The probability of core uncovery at 1 hour following loss of all seal cooling is 0.

Availability of alternate AC power source: The plant has an alternate and independent source of AC power to achieve and maintain a hot standby condition following postulated fire and sabotage events. The Standby Shutdown Facility (SSF) consists of its own DG and associated equipment. It provides an alternate means to cool the RCP seals through the use of a standby makeup pump and functions independently from onsite or offsite AC power. This equipment is covered under the Maintenance Rule.

The SSF DG is not safety related and consequently does not perform a support function in mitigating the consequences of Design Basis Events. The dedicated portions of the Standby Shutdown System are not designed to mitigate the consequences of design-basis accidents, and therefore, seismic, tornado, or missile, design criteria do not apply.

Although the SSF is not classified as a Class I structure, the SSF can be shown to be highly tornado resistant. The original purpose for the SSF was for fire events and security events. To meet the design criteria for those events, the SSF is provided with numerous construction features that make it extremely rugged. Based on these features, the SSF is judged to be much more tornado resistant than a typical masonry block structure seen in residential and commercial buildings.

To estimate the credit taken for the SSF DG to decrease the CDF, a sensitivity study was performed. Removing credit for the SSF DG resulted in a CDF of 1.69E-04/yr versus the base case CDF of 5.17E-05/yr. The resulting CDF increase is 1.17E-04/yr.

SBO contribution to CDF: The SBO contribution to CDF from the IPE is 1.2E-06/yr. The SBO contribution from the current plant PRA model is 1.7E-06/yr. This value is based on a 72 hour CT. The difference in values is primarily due to additional maintenance activities and the use of a lower capacity factor in the IPE model. The SBO contribution with a 7 day CT is 1.2E-06/yr. The increase is due to the additional activities expected to be performed while at-power. The DG fail to start and fail to run values for the current model are provided on Table 8-2. The

corresponding values used in the IPE are 7.0E-03/d for fail to start and 4.6E-03/hr for fail to run.

8.2.3.3 Comanche Peak Results Discussion

The Comanche Peak analysis assumes that the CT increase will be used primarily for completion of additional scheduled maintenance activities, currently done when shutdown, while at-power. With a 7 day CT, DG refueling overhauls will be completed at power and an additional 168 hours of outage time per DG is expected to be required to complete these activities. The CT increase is not expected to result in an increase in the time to complete repair activities that can currently be completed within the 72 hour CT.

The impact of the CT change on the at-power CDF is larger than the 1E-06/yr guideline for a small change as defined in Regulatory Guide 1.174 (see Table 8-1), but this does not account for a decrease in shutdown CDF associated with moving these activities out of shutdown operation. The shutdown risk averted is discussed in Section 8.2.6. The ICCDP value is also larger than the 5E-07 guideline in Regulatory Guide 1.177 (see Table 8-1). This assumes that the total CT will be used. The internal CDF for Comanche Peak is approximately 1.2E-05 which is below the threshold for limiting plant changes that result in a small increase in CDF. The RCP seal LOCA model used is a modified WOG model that contains all the failure modes in the Brookhaven model. The following provides the plant design and PRA model information important in the analysis.

Credit for electrical power cross connects: The plant is not designed for cross connecting the safety buses, so this is not credited in the PRA model or this analysis.

Class 1E AC electrical power system design: The electrical power system consists of two redundant 6.9 KVAC Class 1E safety trains with each powered by a single DG. As noted above, crossties to the other unit are not available.

Basis for LOSP IE Frequency: The LOSP initiating event frequency is based on EPRI TR-110398, "Losses of Offsite Power at U.S. Nuclear Power Plants – Through 1997" (Reference 3).

Loss of offsite power plant experience: The plant has experienced no LOSP events.

Reactor coolant pump seal LOCA model: The RCP seal LOCA model is similar in structure to the Brookhaven model. The probability of core uncovery at 1 hour following loss of all seal cooling is 2.5E-03.

Availability of alternate AC power source: None are available.

SBO contribution to CDF: The SBO contribution to CDF from the IPE is 1.59E-05/yr. This corresponds to a SBO contribution from the current plant PRA model of 1.35E-05/yr. The later value is based on a 7 day CT. The difference in values is due to an updated LOSP frequency, new diesel generator failure rates, revised LOSP recovery factors, and additional maintenance activities. The DG fail to start and fail to run values are provided on Table 8-2. The

corresponding values used in the IPE are 2.1E-02/d for fail to start and 2.5E-03/hr for fail to run.

These results presented here are based on analyses assuming a 7 day CT. A 14 day CT will be requested for Comanche Peak with the results in that submittal consistent with the results presented in this WCAP. That is, the risk associated with extending the CT to 14 days is supported based on a comparison of the risk of performing the same work at-power as opposed to the early stages of a refueling outage as is the current practice.

8.2.3.4 McGuire Results Discussion

The McGuire analysis assumes that the CT increase will be used primarily for corrective maintenance activities while at-power. The additional time will provide a larger cushion of time for completing these activities. It is not expected that additional testing and scheduled maintenance activities will be moved to power operation as a result of the CT increase. Up to 85 hours of additional outage time per DG may be required to complete repair activities while at-power.

The impact of this CT change on CDF is less than the 1E-06/yr guideline for a small change as defined in Regulatory Guide 1.174 (see Table 8-1), without accounting for a decrease in shutdown CDF associated with moving these activities out of shutdown operation. The shutdown risk averted is discussed in Section 8.2.6. The ICCDP values are slightly greater than the 5E-07 guideline in Regulatory Guide 1.177 (see Table 8-1). This assumes that the total seven days will be used, while any single planned or unplanned outage, based on previous history, is expected to be significantly less. The internal event CDF for McGuire is approximately 3.1E-05/yr which is below the threshold for limiting plant changes that result in a small increase in CDF. The WOG RCP seal LOCA model is used to model seal LOCAs during SBO events. The sensitivity of results to the RCP seal LOCA model are discussed in subsection 8.2.5. The following provides the plant design and PRA model information important in this analysis.

Credit for electrical power cross connects: The plant is a dual unit site and is capable of cross-connecting the redundant engineered 4160 VAC safety buses between an alternate source on the same unit and from a source on the opposite unit. This is modeled as a recovery action in the PRA model.

The Operators are trained to perform these cross connections per approved procedures. In addition, the Operators are familiar with these alignments since they are made during each refueling outage. Licensed Operations personnel have simulated the control room portion and non licensed Operators have walked and simulated the plant breaker manipulations. Approximately twenty minutes is required to complete the alignment. It was performed with only one team of Operators (the Operators had to walk between the 6900 VAC and essential 4160 VAC switchgear rooms). Several minutes could be removed from the estimate if two teams of Operators were utilized, one at each location. It was assumed both units were in normal electrical alignment prior to the event, and that offsite power and 6900 VAC buses were energized.

To estimate the credit taken for the crosstie on CDF, a sensitivity study was performed. Removing credit for the crosstie resulted in a CDF of 3.77E-05/yr versus the base case CDF of 3.13E-05/yr. The resulting CDF increase is 6.40E-06/yr.

Class 1E AC electrical power system design: The electrical power system consists of two redundant 4160 VAC Class 1E safety trains with each powered by a single DG. As discussed above, crossties to the other unit are available.

Basis for LOSP IE Frequency: Data is based on EPRI TR-106306, "Losses of Off-Site Power at U.S. Nuclear Power Plants – Through 1995." There were 27.7 years of plant operating experience at McGuire during the EPRI data period. There were three LOSP events during the period covered by EPRI TR-106306 (1980-1995). These events are included in the McGuire specific history. This resulted in a Bayesian updated LOSP frequency for McGuire of 5.67E-02/yr.

Loss of offsite power plant experience:

August 21, 1984: Corrective maintenance was being performed on the switchyard computer. The computer was restarted, checked for operability and returned to service. When the switchyard operator re-enabled the computer control outputs, thirty power circuit breakers and associated disconnects in the switchyard opened due to component malfunction and design deficiency resulting in a Unit 1 loss of offsite power. (See LER 369/84-24)

February 11, 1991: Failed relay in conjunction with a post modification test being performed on a newly added relay circuit in the switchyard led to a blackout in the 230 KV switchyard and Unit 1 reactor trip. (See LER 369/91-01)

December 27, 1993: Unit 2 loss of bus line 2B due to failed insulator in switchyard. Turbine generator failed to runback leading to a loss of bus line 2A on overcurrent. (See LER 370/93-08)

Using the same 27.7 years of operation at McGuire in the EPRI study (through 1995) with three events results in a frequency of 1.08E-01/yr. Including the plant experience through 1999 results in a LOSP frequency of 8.40E-02/yr. Due to the small number of actual plant events, the Bayesian updated LOSP frequency was used in the model.

Reactor coolant pump seal LOCA model: The RCP seal LOCA model is based on the WOG model described in WCAP-10541, "Reactor Coolant Pump Seal Performance Following a Loss of All AC Power." The probability of core uncovery at 1 hour following loss of all seal cooling is 0.

Availability of alternate AC power source: The plant has an alternate and independent source of AC power to achieve and maintain a hot standby condition following postulated fire and sabotage events. The SSF consists of its own DG and associated equipment. It provides an alternate means to cool the RCP seals through the use of a standby makeup pump and functions independently from onsite or offsite AC power. This equipment is covered under the Maintenance Rule.

The SSF DG is not safety related and consequently does not perform a support function in mitigating the consequences of Design Basis Events. In accordance with Appendix R, the dedicated portions of the Standby Shutdown System are not designed to mitigate the consequences of design-basis accidents and need not be protected from the effects of floods, tornadoes, tornado missiles, or other environmental phenomena. No single point vulnerability exists whereby a likely weather-related event or single active failure could disable any portion of the onsite emergency AC power sources or the preferred power sources, and simultaneously fail the alternate power source.

Although the SSF is not classified as a Class I structure, the SSF can be shown to be highly tornado resistant. The original purpose for the SSF was for fire events and security events. To meet the design criteria for those events, the SSF is provided with numerous features which make it extremely rugged. Based on these features, the SSF is judged to be much more tornado resistant than a typical masonry block structure seen in residential and commercial buildings.

To estimate the credit taken for the SSF DG to decrease the CDF, a sensitivity study was performed. Removing credit for the SSF DG resulted in a CDF of 1.86E-04/yr versus the base case CDF of 3.13E-05/yr. The resulting CDF increase is 1.54E-04/yr.

SBO contribution to CDF: The SBO contribution to CDF from the IPE is 1.5E-05/yr. The SBO contribution from the current plant PRA model is 3.0E-06/yr. This value is based on a 72 hour CT. The difference in values is primarily due to a revised approach to single and dual unit LOSP initiating event frequencies, new diesel generator failure rates, and the use of a lower capacity factor in the IPE model. The SBO contribution with a 7 day CT is 3.5E-06/yr. The increase is due to the additional activities expected to be performed while at-power. The DG fail to start and fail to run values for the current model are provided on Table 8-2. The corresponding values used in the IPE are 6.0E-03/d for fail to start and 7.9E-03/hr for fail to run.

8.2.3.5 Shearon Harris Results Discussion

The Shearon Harris analysis assumes that the CT increase will be used primarily for doing additional scheduled maintenance activities, currently done when shutdown, while at-power. An additional 5 days of outage time per DG per five year period is expected to be required to complete these additional activities while at-power. The CT increase is not expected to result in an increase in the time to complete repair activities that can currently be completed within the 72 hour CT.

The impact of this CT change on CDF is less than the 1E-06/yr guideline for a small change as defined in Regulatory Guide 1.174 (see Table 8-1), without accounting for a decrease in shutdown CDF associated with moving these activities out of shutdown operation. The shutdown risk averted is discussed in Section 8.2.6. The ICCDP values are larger than the 5E-07 guideline in Regulatory Guide 1.177 (see Table 8-1). This assumes that the total seven days will be used, while at most five days will be used at any one time for scheduled maintenance activities. The internal event CDF for Shearon Harris is approximately 5.0E-05/yr which is below the threshold for limiting plant changes that result in a small increase in CDF. The RCP

seal LOCA model described in NUREG/CR-4550 (Reference 6) is used to model seal LOCAs during SBO events. The following provides the plant design and PRA model information important in this analysis.

Credit for electrical power cross connects: The plant is a single unit site, so there is no credit for a crosstie to another unit if offsite power is lost.

Class 1E AC electrical power system design: The electrical power system consists of two redundant 6900 VAC Class 1E safety trains with each powered by a single DG.

Basis for LOSP IE Frequency: The LOSP initiating event frequency is based on data from an EPRI compilation of LOSP events from 1980 to 1995 (EPRI TR-106306, "Losses of Off-Site Power at U.S. Nuclear Power Plants – Through 1995") updated with Shearon Harris plant specific operating experience that includes approximately 12 years of operation.

Loss of offsite power plant experience: The plant has experienced no LOSP events.

Reactor coolant pump seal LOCA model: The RCP seal LOCA model is based on the NUREG/CR-4550. The probability of core uncovery at 1 hour following loss of all seal cooling is 0.

Availability of alternate AC power source: None are available.

SBO contribution to CDF: The SBO contribution to CDF from the IPE is 1.82E-05/yr. This corresponds to a SBO contribution from the current plant PRA model of approximately 1.34E-05/yr. This is actually an LOSP contribution which is primarily SBO. Both of these values are based on a 72 hour CT. The difference in these values is primarily due to changes related to DG reliability values and the LOSP frequency. The SBO (LOSP actually) contribution with a 7 day CT is 1.36E-06/yr. This increase is due to the additional activities expected to be performed while at-power. The DG fail to start and fail to run values are provided on Table 8-2. The corresponding values used in the IPE are 5.2E-03/d for fail to start and 4.0E-04/hr for fail to run.

8.2.3.6 Summer Results Discussion

The Summer analysis assumes that the CT increase will be used primarily for doing additional scheduled maintenance activities, currently done when shutdown, while at-power. An additional 1 day of outage time per DG per cycle is expected to be required to complete these additional activities while at-power. The CT increase is not expected to result in an increase in the time to complete repair activities that can currently be completed within the 72 hour CT.

Several different cases were considered for the Summer plant. These include:

- Base Case – This case represents the current Summer PRA model.

- Sensitivity Case 1 – This case represents the current Summer PRA model with the DG mission time reduced from 8 hours to 2 hours. Failure of the DGs lead to station blackout and the DG mission time is an important consideration. There is a high probability that offsite power will be recovered in a short time period. Using an 8 hour mission time over estimates the time required for the DG to run after a LOSP event, therefore, a sensitivity study with a 2 hour mission time was quantified. The 2 hour time is based on a weighted average involving the probability of recovering offsite power for different times.

- Sensitivity Case 2 – This case represents the current Summer PRA model with the 2 hour DG mission time described in Sensitivity Case 1. In addition, this case credits an alternate AC power source. This source is the offsite hydro-electric station. This was credited by a reduction to the LOSP initiating event frequency. The hydro-electric source will provide an alternate source of power for LOSP events initiated by plant-centered and grid related faults. Since the power lines are not protected, no credit was taken for this AC source for weather-induced LOSP events.

The impact of this CT change on CDF meets the 1E-06/yr guideline for a small change as defined in Regulatory Guide 1.174 (see Table 8-1) for all three cases, without accounting for a decrease in shutdown CDF associated with moving these activities out of shutdown operation. The shutdown risk averted is discussed in Section 8.2.6. The ICCDP values are larger than the 5E-07 guideline in Regulatory Guide 1.177 (see Table 8-1) for all three cases, but for Sensitivity Case 2 the ICCDP is near the guideline value. This assumes that the total seven days will be used, while for scheduled test and maintenance activities the actual outage time is expected to be significantly lower. The internal event CDF for Summer is approximately 5.6E-05/yr for the base case, and lower for each sensitivity case, which is below the threshold for limiting plant changes that result in a small increase in CDF. The WOG RCP seal LOCA model is used to model seal LOCAs during SBO events. The sensitivity of results to the RCP seal LOCA model are discussed in subsection 8.2.5. The following provides the plant design and PRA model information important in this analysis.

Credit for electrical power cross connects: The plant is a single unit site, so there is no credit for a crosstie to another unit if offsite power is lost.

Class 1E AC electrical power system design: The electrical power system consists of two redundant 7200 VAC Class 1E safety trains with each powered by a single DG.

Basis for LOSP IE Frequency: The LOSP initiating event frequency is based on data from an EPRI compilation of LOSP events from 1980 to 1995 (EPRI TR-106306, "Losses of Off-Site Power at U.S. Nuclear Power Plants – Through 1995").

Loss of offsite power plant experience: The plant has experienced one event that has been classified as a LOSP event even though offsite power was not completely lost. The voltage on the buses was degraded, but the non-safety loads remained operable and met the plant needs. The plant did trip on the event. Additional information is available in LER 89-012.

Reactor coolant pump seal LOCA model: The RCP seal LOCA model is based on the WOG model described in WCAP-10541, "Reactor Coolant Pump Seal Performance Following a Loss of All AC Power" and WCAP-11550, "RCP Seal Integrity Generic Issue B-23, Slides Presented to the NRC on July 15, 1987" (Reference 7). The probability of core uncovery at 1 hour following loss of all seal cooling is 0.0283.

Availability of alternate AC power source: As discussed above in the description of Sensitivity Case 2, credit is taken for using the offsite hydro-electric plant as an alternate source of AC power following a LOSP event. It is only credited for LOSP events initiated by plant-centered faults or grid-related faults. There are formal procedures to follow to use the hydro-electric plant in this capacity.

SBO contribution to CDF: The SBO contribution to CDF from the IPE is 4.33E-05/yr. This corresponds to a SBO contribution from the current plant PRA model (Base Case) of 3.84E-05/yr. Both of these values are based on a 72 hour CT. The difference in these values is primarily due to changes related to DG reliability values and the LOSP frequency. The SBO contribution with a 7 day CT is 3.93E-05/yr. This increase is due to the additional activities expected to be performed while at-power. The DG fail to start and fail to run values are provided on Table 8-2. The corresponding values used in the IPE are 2.3E-03/d for fail to start and 7.1E-03/hr for fail to run.

8.2.4 Comparison of Results Between Plants

The plants that provided results for the DG completion time extension represent a diverse group. There are both single unit and dual unit sites, as well as plants that have alternate AC sources and those that do not. In addition, different RCP seal LOCA models are used by the participating plants. There are several key issues to understanding the differences in results between the plants. These are:

a. Initiating event frequency

b. DG reliability including the random and common cause failure to start and run probabilities

c. Class 1E AC electrical power system design and the number of DGs

d. Units on site and ability to cross connect electrical power systems between the units

e. Availability of alternate AC power sources

f. RCP seal LOCA model

The first three items (a, b, c) are important to the frequency of developing a unit or station blackout condition. An increased frequency of station blackout events is associated with a higher LOSP initiating event frequency, lower reliability of the DGs, and less DG redundancy. The next two items (d, e) are important to mitigation of the event. Connecting to alternate sources of AC power restores the ability of the plant to fully mitigate the event. Finally, the choice of the RCP seal LOCA model (item f) will have a bearing on the probability of going to a

core damage state. Other elements that are important include the reliability of the auxiliary feedwater system (turbine-driven pumps), and the reliability and capacity of the DC power supply (batteries). One additional factor that needs to be considered is the expected use of the CT. Plants that estimate greater change in DG outage time with the longer CTs will show larger impacts on CDF, given everything else is equal.

There are several consistencies across most WOG plants considering the DG completion time change with regard to the issues being considered in this analysis. The consistencies are:

- The Class 1E AC electrical power system design with DG arrangement. All the plants considered have a two train system with one DG per train.

- The loss of offsite power initiating event frequencies used in the PRA models. The values range from a low of 3.4E-02/yr to a high of 5.7E-02/yr. The highest value is for McGuire which has experienced several LOSP events resulting in the higher initiating event frequency.

- The DG common cause failure model used in the PRA models are all essentially the same (Beta factor or MGL method).

No other commonalties across all the plants exist. There are some commonalties between two or three of the plants, such as RCP seal LOCA model used and values used for DG fail to start and fail to run. This complicates the task of understanding why the results differ between similar plants. For example, Callaway, Shearon Harris, and Summer (Base Case) are all single unit sites with no alternate AC power systems. At first glance it would be expected that the results, in terms of impact on CDF and the ICCDP, would be similar. This is seen not to be the case. In this comparison, how the plant intends on using the extended CT in terms of the impact on the DG availability, the RCP seal LOCA model used, and DG reliability, for example, also need to be considered. One of the key differences between the Shearon Harris and Summer (Base Case) models is the RCP seal LOCA model and the probability of core uncovery early in the station blackout event. The Summer model uses a value of 0.0283 for core uncovery at one hour whereas Shearon Harris uses a value of 0.0. It should also be noted that the RCP seal LOCA model used can also impact the results due to other events that can lead to loss of RCP seal cooling, such as, loss of component cooling water and loss of service water.

Catawba and McGuire are similarly designed plants, each a Westinghouse four-loop, ice-condenser, but have significantly different results. The major reason for the difference in values between these plants occurs due to internal flooding issues at Catawba. Internal flooding is one of the dominant contributors to the CDF at Catawba representing about 31% of the internal CDF. The main and standby 6900/4160 volt transformers at Catawba are located in the basement of the Turbine Building. McGuire's 6900/4160 volt transformers are located on the Turbine Building mezzanine level. Additionally, Catawba also has cooling towers whereas McGuire does not. A large flood in one of Catawba's Turbine Buildings would submerge these transformers and, coupled with DG failures and a failure to provide either seal injection or Auxiliary Feedwater, would lead to core damage.

In light of the number of differences between the plants in terms of modeling and plant design, the overall results do suggest that increasing the DG completion time to 7 days has a relatively small impact on CDF. The Comanche Peak analysis results in the largest impact on CDF. This is due to their plans for using the CT extension to complete DG refueling overhauls, and major 5 year and 10 year DG overhauls while at-power. Most of the other utilities expect smaller impacts on outage time, even if they plan on doing some additional DG planned maintenance activities at-power. In addition, the ICCDP values are not outside the bounds of reasonable expectations, except possibly for the Summer Base Case results which has an ICCDP value over an order of magnitude higher than the ICCDP guideline. Consideration must also be given to the core damage frequency for when one DG is out of service. In this plant configuration the CDFs for all the plants are within a factor of two of 1E-04/yr, except for the Summer Base Case. These conditional CDFs are generally an increase of about a factor of 3 over the CDF with nominal equipment unavailabilities. This would not be considered a high risk configuration. The Summer results are also in line with reasonable expectations when considering the two sensitivity cases.

8.2.5 Additional Sensitivity Analyses

To get an appreciation for the importance of the RCP seal LOCA model and the potential impact of the specific RCP seal LOCA model used on the CDF analysis, the Summer Base Case model was rerun with the Brookhaven National Laboratory (BNL) model described in BNL Technical Report W6211-08/99 with three modifications. Use of the BNL model in PRAs and the modifications were discussed in a meeting between the NRC and WOG on September 20, 2000. These modifications are:

- Probability of popping and binding is reduced by a factor of two for seals with high temperature O-rings.
- Probability of O-ring failure is reduced by a factor of two for seals with old O-rings.
- Starting time of the time-dependent seal face failure (popping and binding) is 30 minutes after the loss of RCP seal cooling.

The Summer PRA model addresses the probability of core uncovery due to RCP seal LOCAs at various times during the SBO event to determine the probability that the core has uncovered. This is done with and without RCS cooldown. The RCP seal LOCA model is critical in determining the probability that the core has uncovered, and therefore, the frequency of core damage. A comparison of core uncovery probabilities are provided on Table 8-4 for the WOG and modified BNL RCP Seal LOCA models. This comparison shows that the WOG model is more conservative earlier in the event and becomes less conservative as the event progresses past 4 hours.

Quantification of the Summer PRA model with the modified BNL model resulted in a CDF of 5.86E-05/yr. This represents an increase in CDF of 2.7E-06/yr (~5%) over the Summer PRA model with the WOG RCP seal model, which is a relatively small impact and is not expected to change the conclusions of this study. It is expected that the impact on the Summer CDF will be

the greatest since the SBO contribution to CDF is larger for the Summer PRA model than for the others (see the discussions of SBO contribution to CDF in subsections 8.2.3.1 to 8.2.3.6).

8.2.6 Tradeoff Against Shutdown Risk

One of the primary reasons for extending the DG completion time is to allow utilities to complete more scheduled test and maintenance activities at-power instead of when the plant is shutdown. It is indicated in subsection 8.2.1 that the current CT of 72 hours is insufficient to complete some activities at-power. Subsection 8.2.2 demonstrates that the risk impact of moving these activities to power operation is small. This risk assessment does not account for the risk averted by moving these activities from one mode to another. By moving these activities out of shutdown operation, there will be a reduction in shutdown risk. The following provides a qualitative discussion of the shutdown risk reduction followed by a quantitative assessment based on Comanche Peak.

During plant shutdown, LOSP events can be significant contributors to the risk level. Although RCP seal LOCAs are no longer an issue due to the lower RCS temperature and pressure, loss of decay heat removal capability is important. When operating in Mode 6, decay heat is being removed by the residual heat removal (RHR) system, or its equivalent, which generally is a two train system. If offsite power is lost, the DGs need to start and run to continue to supply power to the RHR pumps and systems supporting the RHR system, such as, component cooling water and service water. Failure of the DGs to start or run will result in a SBO condition in which decay heat removal will be lost and core uncovery could occur. Although RCP seal LOCAs are an issue during a SBO event while at-power, decay heat removal while at-power is not as critical since heat removal will continue via the turbine-driven AFW pumps. The turbine-driven AFW pumps are not available when the plant is shutdown due to a lack of steam supply.

In addition, when the plant is shutdown there is an increased probability of a LOSP event due to maintenance or other activities occurring in the switchyard. These activities can result in a degraded or interrupted supply of offsite power. These activities are in addition to the typical contributors to LOSP event frequency, such as, weather events or loss of grid. These switchyard activities increase the contribution of plant centered faults to the LOSP frequency. Therefore, there is a higher reliance on the DGs when the units are shutdown.

To determine the reduction in risk related to moving scheduled activities from shutdown operation requires a detailed shutdown PRA model. A shutdown assessment was performed for Comanche Peak to determine the risk averted during shutdown operation by moving DG overhauls out of the outage. The analysis was completed for a 14 day DG outage. The Comanche Peak shutdown and mode transition model was used to assess the impact on risk. Consideration was given to a 14 day DG outage at the beginning of the plant outage and considered the risk, as measured by CDF, with one DG out of service in Modes 5 and 6. Conducting the DG outage at the start of the plant outage is the practice at Comanche Peak. The ICCDP was calculated for each plant operating state of interest. The following provides the results:

Plant Operating State	ICCDP
Mode 5, Cold Shutdown	8.25E-06
Mode 5, 1 Foot Below the Flange	6.09E-05
Mode 5, Midloop	3.78E-05
Mode 6, Refueling Basin Flooded for Core Unload	1.77E-07
Total	1.06E-04

The corresponding Comanche Peak ICCDP for a 14 day DG outage while at-power is 3.74E-06. From this it is seen that the ICCDPs associated with doing this activity while shutdown are significantly larger than the ICCDP for an at-power DG outage.

It is concluded from this that removing a DG from service while at-power is a lower risk configuration than removing a DG from operation while shutdown. Although this assessment was completed specifically for Comanche Peak, this conclusion is expected to be applicable for all plants that schedule DG outages at the beginning of plant outages.

8.3 LCO 3.8.1, DIESEL GENERATOR COMMON CAUSE FAILURE EVALUATION

Condition B of LCO 3.8.1 defines the requirements for the DG operability. Required Actions B.3.1 or B.3.2 require that if one DG has failed that it be demonstrated that the remaining DG(s) are not inoperable for the same reason. This can be accomplished by completing SR 3.8.1.2, per Action B.3.2 which requires a DG start from standby conditions or by determining that the cause of the inoperable DG does not exist on the operable DG(s), per Action B.3.1. Action B.3.1 provides an allowance to avoid unnecessary testing of the operable DG(s). These actions are required to be completed within 24 hours. The following evaluates extending this time to 72 hours. The reasons for requesting this change are discussed in Section 3. Appendix E contains the details of the evaluation process for this completion time increase.

The following plants participated in evaluating this CT change:

- Catawba
- Ginna
- McGuire
- Sequoyah
- Shearon Harris

The Class 1E AC electrical power distribution system AC sources consists of the offsite power sources and the onsite standby power sources. DGs are used as the onsite power sources. The DGs are required to provide power to the Class 1E AC systems in the event that offsite power is lost to the Class 1E AC system. The DGs are of particular importance following a loss of offsite power event. During this event, the DGs are required to start and run, and supply the power to

safely shut down the plant if the plant is at-power when offsite power is lost or maintain the plant in a safe shutdown condition if the plant is shutdown when offsite power is lost. If the DGs are unavailable or fail to start and run, then a station blackout situation exists. Under a station blackout condition, decay heat removal will continue by the turbine-driven auxiliary feedwater pump if a steam supply to the pump is available (plant Modes 1-4). Also during a station blackout, cooling to the RCP seals will be interrupted and a seal LOCA with subsequent core uncovery and core damage may occur. This event is of particular importance when the RCS temperature and pressure are high.

8.3.1 Impact of the Extended Completion Time

As previously discussed, the extended completion time will provide more flexibility to plant personnel to determine whether or not the failure of the inoperable DG is a common cause concern. This completion time extension will allow plants to operate at-power for additional time with DG(s) that are potentially inoperable due to common cause issues. Note that this action is only applicable when the LCO is entered due to DG failures (repair activities) and not for routine or scheduled maintenance or test activities.

8.3.2 Plant Specific Results

The results for the participating plants, in terms of the impact of the CT increase on CDF and ICCDP, are shown on Table 8-5. These values were calculated by each utility following the method described in Appendix E using their plant specific PRA.

As discussed in Section 8.2.2, the assumptions and PRA modeling features, as well as the plant design are important when assessing the impact of this completion time increase and making comparisons between plants. Modeling assumptions and features that may be important are the reliability of the DGs, common cause failure model, and RCP seal LOCA model. Design features that reduce the probability of station blackout events, such as the ability to crosstie electrical systems to another unit, reduce the importance of the availability of any one DG. Systems or components dedicated to maintaining RCP seal cooling during SBO events also reduce the importance of DGs. Table 8-2 provides a summary of the important assumptions and modeling features in the plant specific PRA models. Table 8-3 provides a summary of plant design features important to preventing core damage events following loss of offsite power events.

8.3.3 Discussion of Results by Plant

The following discusses the results for each plant and also the assumptions, PRA modeling, and design feature important to each plant with regard to this CT extension. This includes the following:

- Credit for electrical power cross connects between units at multi-unit sites
- Class 1E AC power distribution system
- Basis for the loss of offsite power event frequency
- Loss of offsite power plant experience

- Reactor coolant pump seal LOCA model
- Availability of alternate AC power sources
- Station blackout (SBO) contribution to CDF

8.3.3.1 Catawba Results Discussion

The impact of this CT change on CDF is well below the 1E-06/yr guideline for a small change as defined in Regulatory Guide 1.174 (see Table 8-5). The ICCDP probability is somewhat larger than the 5E-07 guideline in Regulatory Guide 1.177 (see Table 8-5). This assumes that the total 72 hours will be used to assess the CCF issue. Often this assessment is expected to be completed in less time. The internal event CDF for Catawba is approximately 5.2E-05/yr which is below the threshold for limiting plant changes that result in a small increase in CDF. Additional information regarding the plant features and PRA model are provided in subsection 8.2.3.2.

8.3.3.2 Ginna Results Discussion

The impact of this CT change on CDF is well below the 1E-06/yr guideline for a small change as defined in Regulatory Guide 1.174 (see Table 8-5). The ICCDP probability is somewhat larger than the 5E-07 guideline in Regulatory Guide 1.177 (see Table 8-5). This assumes that the total 72 hours will be used to assess the CCF issue. Often this assessment is expected to be completed in less time. The internal event CDF for Ginna is approximately 8.6E-05/yr which is below the threshold for limiting plant changes that result in a small increase in CDF. The following provides the plant design and PRA model information important in this analysis.

Credit for electrical power cross connects: The plant is a single unit site, so there is no credit for a crosstie to another unit if offsite power is lost.

Class 1E AC electrical power system design: The electrical power system consists of two redundant 480 VAC Class 1E safety trains with each powered by a single DG.

Basis for LOSP IE Frequency: The LOSP initiating event frequency is taken from EPRI TR-110398, "Losses of Off-Site Power at U.S. Nuclear Power Plants – Through 1997" and NUREG/CR-5750, "Rates of Initiating Events at U.S. Nuclear Power Plants: 1987-1995" (Reference 8). A Bayesian update process was used to combine the industry generic data with the Ginna specific history.

Loss of offsite power plant experience: The plant has experienced no LOSP events.

Reactor coolant pump seal LOCA model: The RCP seal LOCA model is based on BNL Technical Report W6211-08/99, the WOG model described in WCAP-10541, and the NRC model described in NUREG-4550. The probability of core uncovery at 1 hour following loss of all seal cooling is 0.

Availability of alternate AC power source: None are available.

SBO contribution to CDF: The SBO contribution to CDF from the IPE is 6.2E-06/yr. This corresponds to a SBO contribution from the current plant PRA model of 3.5E-06/yr. The DG fail to start and fail to run values are provided on Table 8-2. The corresponding values used in the IPE are 4.9E-03/d for fail to start and 1.3E-03/hr for fail to run.

8.3.3.3 McGuire Results Discussion

The impact of this CT change on CDF is well below the 1E-06/yr guideline for a small change as defined in Regulatory Guide 1.174 (see Table 8-5). The ICCDP probability is slightly lower than the 5E-07 guideline in Regulatory Guide 1.177 (see Table 8-5). This assumes that the total 72 hours will be used to assess the CCF issue. Often this assessment is expected to be completed in less time. The internal event CDF for McGuire is approximately 3.1E-05/yr which is below the threshold for limiting plant changes that result in a small increase in CDF. Additional information regarding the plant features and PRA model are provided in subsection 8.2.3.4.

8.3.3.4 Sequoyah Results Discussion

The impact of this CT change on CDF is significantly below the 1E-06/yr guideline for a small change as defined in Regulatory Guide 1.174 (see Table 8-5). The ICCDP probability is also less than the 5E-07 guideline in Regulatory Guide 1.177 (see Table 8-1). This assumes that the total 72 hours will be used. The internal event CDF for Sequoyah is approximately 3.8E-05/yr which is below the threshold for limiting plant changes that result in a small increase in CDF. The following provides the plant design and PRA model information important in this analysis.

Credit for electrical power cross connects: The plant is a dual unit site, but no credit is taken for a crosstie to the other unit if offsite power is lost.

Class 1E AC electrical power system design: The electrical power system consists of two redundant 6900 VAC Class 1E safety trains with each powered by a single DG.

Basis for LOSP IE Frequency: The LOSP initiating event frequency is based on generic data (PLG-0050, "Database for Probabilistic Risk Assessment of Light Water Nuclear Reactors," Reference 9) and updated with plant specific operating experience.

Loss of offsite power plant experience: The plant has experienced no LOSP events.

Reactor coolant pump seal LOCA model: The RCP seal LOCA model is based on NUREG-1150 (Reference 10) and NUREG-4550. The probability of core uncovery at one hour following a loss of all seal cooling is 0.

Availability of alternate AC power source: None are available.

SBO contribution to CDF: The SBO contribution to CDF from the IPE is 1.1E-05/yr. This corresponds to a SBO contribution from the current plant PRA model of 3.9E-06/yr. The DG

fail to start and fail to run values are provided on Table 8-2. The values used in the IPE are the same.

8.3.3.5 Shearon Harris Results Discussion

The impact of this CT change on CDF is well below the 1E-06/yr guideline for a small change as defined in Regulatory Guide 1.174 (see Table 8-5). The ICCDP probability is somewhat larger than the 5E-07 guideline in Regulatory Guide 1.177 (see Table 8-5). This assumes that the total 72 hours will be used to assess the CCF issue. Often this assessment is expected to be completed in less time. The internal event CDF for Shearon Harris is approximately 5.0E-05/yr which is below the threshold for limiting plant changes that result in a small increase in CDF. Additional information regarding the plant features and PRA model are provided in subsection 8.2.3.5.

8.3.4 Comparison of Results Between Plants

Most of the discussion in subsection 8.2.4 on the comparison between plants completion time increase to restore a DG to operable status also applies here. The plants that provided results for the DG common cause failure evaluation completion extension represent a diverse group. There are both single unit and dual unit sites, as well as plants that have alternate AC sources and those that do not. In addition, different RCP seal LOCA models are used by the participating plants. There are several key issues to understanding the differences in results between the plants. These are:

- Initiating event frequency
- DG reliability including the random and common cause failure to start and run probabilities
- Class 1E AC electrical power system design and the number of DGs
- Units on site and ability to cross connect electrical power systems between the units
- Availability of alternate AC power sources
- RCP seal LOCA model

See subsection 8.2.4 for additional discussion.

In light of the number of differences between the plants in terms of modeling and plant design, the overall results do suggest that increasing the completion time for this to 72 hours has a relatively small impact on CDF for all the plants. In addition, the ICCDP values are not outside the bounds of reasonable expectations. Consideration must also be given to the core damage frequency when one DG is out of service for repair. In this plant configuration the CDFs for all the plants are within a factor of three of 1E-04/yr. These conditional CDFs are generally an

increase of about a factor of 3 over the CDF with nominal equipment unavailabilities. This would not be considered a high risk configuration.

8.4 LCO 3.8.9, RESTORE AC VITAL BUS TO OPERABLE STATUS

Condition B of LCO 3.8.9 defines the requirements for the AC vital bus operability. Required Action B.1 requires restoring the vital bus to operable status with a completion time of 2 hours. The following evaluates extending this time to 24 hours. The reasons for requesting this change are provided in Section 3. Appendix F contains the details of the evaluation process for this CT increase.

The following plants participated in evaluating this CT extension:

- Catawba
- Ginna
- McGuire
- Sequoyah
- Summer

The 120 VAC vital buses are typically arranged in two load groups per train and are normally powered from inverters. The inverters are supplied power from the Class 1E 125 VDC system. An alternate power supply for the vital buses is also available and its source varies from plant-to-plant. If an inverter is inoperable or is to be removed from service, the vital AC bus can be supplied power from this backup supply. Although the backup power sources are plant specific, they include internal AC sources and constant voltage transformers, as applicable to the unit. Typical AC vital buses are shown on the following table:

Typical Vital AC Electrical Distribution System			
Bus Type	**Voltage**	**Train A**	**Train B**
AC vital buses	120 V	Bus 01 Bus 03	Bus 02 Bus 04

With one AC vital bus inoperable, the remaining operable AC vital buses are capable of supporting the minimum safety functions necessary to shutdown the unit and maintain it in a safe shutdown condition.

Typical loads on the AC vital buses are:

- Solid state protection system (SSPS) channels
- Nuclear instrumentation system (NIS) instrumentation and control power
- Engineered safety features actuation system (ESFAS) relays
- Process rack protection sets
- Transmitter power supplies

Each vital bus does not carry the same loads, therefore, the risk importance of each bus may differ.

8.4.1 Impact of the Extended Completion Time

Plants do not conduct any testing or scheduled maintenance on the 120 VAC vital buses during power operation that would make the system inoperable or unavailable. With the extension of the CT to 24 hours this will not change.

The primary benefit for the CT extension is for protection of equipment and safety of personnel immediately following a failure. Technical Specifications currently require that an inoperable AC vital bus be restored to OPERABLE within 2 hours. Typically this is done by manually switching the affected vital bus to its alternate power source since the failure usually is not the vital bus itself. An inoperable vital bus is immediately indicated in the Control Room by a number of alarms and status lights. Following the loss of a vital AC bus, operations personnel in the Control Room enter the appropriate Abnormal Procedures to stabilize the plant. While loss of one vital bus will not typically trip the reactor, it can impact other plant systems such as the Pressurizer Pressure Control System, Nuclear Power Range Instrumentation, and normal primary letdown requiring operator action to resolve.

Operations personnel are dispatched to the area of the plant where the affected equipment is located, and Engineering, and Instrument and Control personnel (or Maintenance personnel) assess the problem. Prior to aligning power to the affected vital bus from an alternate source, the failed component needs to be identified and isolated. This involves confirming that the bus itself is not faulted to prevent closing a breaker onto a faulted bus. This assessment and realignment of power takes time to ensure it is completed in a safe manner. As was noted in Section 3 there have been previous situations where the 2 hour time frame was challenged.

Extending this CT will provide an increased flexibility for plant personnel to troubleshoot and complete repairs, if needed, in a more controlled manner that will enhance equipment reliability and personnel safety. For the case of equipment failures, this extension will also enable repairs to be completed at-power which reduces the need to place the plant through an unnecessary shutdown transient that might increase risk over remaining at power to repair the equipment. Additionally, it will also reduce the administrative burden on plant personnel who typically prepare Request for Enforcement Discretion submittals as well as reduce the number of actual Enforcement Discretion requests to the NRC.

8.4.2 Plant Specific Results

The results for the participating plants, in terms of the impact of the CT increase on CDF and ICCDP, are shown on Table 8-6. These values were calculated by each utility following the method described in Appendix F using their plant specific PRA. Table 8-7 provides a summary of plant features important to the evaluation of the CT extension for the vital AC buses.

As discussed in Section 8.2.2, the assumptions and PRA modeling features, as well as the plant design are important when assessing the impact of CT increases and making comparisons

between plants. Modeling assumptions and features that may be important are the design of the vital AC power system, reliability of components in this system, and loads on these buses.

8.4.3 Discussion of Results by Plant

The following discusses the results for each plant and also assumptions, PRA modeling, and design features important to each plant with regard to this CT extension. This includes the following:

- Use of the extended completion time
- Impact of a loss of one or more buses on plant operation
- Assumption of length of completion time that will be used
- Basis for CCDF evaluation
- Vital bus configuration

8.4.3.1 Catawba Results Discussion

The Catawba analysis assumes the CT extension will be used to provide additional time to troubleshoot failures associated with the vital I&C components prior to energizing the 120 VAC bus from its alternate source and also to complete repair activities. Currently, no test or scheduled maintenance activities are done on the vital AC bus during power operation which make the bus inoperable or unavailable. With the extended CT, this practice will be continued. This analysis conservatively assumes that all repair activities will require the full 24 CT. This represents an increase of at least a factor of 12 (24 hours/2 hours) over current practice. The frequency of repair activities is based on failure probabilities of the components leading to failure of powered vital buses.

The impact of the CT increase on CDF is less than the 1E-06/yr guideline for a small change as defined in Regulatory Guide 1.174 (see Table 8-6). The ICCDP probability is slightly greater than the 5E-07 guideline in Regulatory Guide 1.177 (see Table 8-6). This ICCDP is based on bus 1ERPD which was used since it has the greatest number of loads, although any of the four buses will have the same impact on CDF. This analysis also assumes the total 24 hour CT will be used when in practice it will be less. The internal event CDF for Catawba is approximately 5.2E-05/yr which is below the threshold for limiting plant changes that result in a small increase in CDF.

<u>Vital AC power system design:</u> The AC vital power system consists of two safety trains with two vital buses per train. Each vital bus is normally powered from an inverter. When the inverter power source is lost, the power is the provided from regulated voltage transformers off a non-Class 1E AC bus.

<u>Impact of loss of vital AC on plant operation:</u> Loss of a single AC vital bus leads to loss of power to a number of components. Although the operators may need to take actions to maintain the plant in a stable condition, loss of a single bus should not lead to a reactor trip. Since the vital buses supply power to the process protection system, loss of a single bus will interrupt power to one complete channel set and lead to a partial tripped condition. For

example, the trip logic will change from 2 of 4 to 1 of 3. Loss of two AC vital buses will then lead to a reactor trip since the trip logic will be met and will also interrupt power to SSPS train A and B slave relays. The ESF equipment will be manually started in this case. Loss of two 120 VAC vital buses is not specifically modeled in the PRA due to the low probability of occurrence and the ability of the operators to start the required mitigation equipment.

8.4.3.2 Ginna Results Discussion

The Ginna analysis assumes the CT extension will be used to provide additional time to complete repair activities which includes identification of the failed components and switching the bus power supply to its alternate source. Currently, no test or scheduled maintenance activities are done on the vital AC buses during power operation. With the extended CT, this practice will be continued. This analysis conservatively assumes that all repair activities will require the full 24 hour time. This represents an increase of at least a factor of 12 (24 hours/ 2 hours) over current practice. The frequency of repair activities is based on failure probabilities of the components leading to failure of powered vital buses.

The impact of the CT increase on CDF is less than the 1E-06/yr guideline for a small change as defined in Regulatory Guide 1.174 (see Table 8-6). The ICCDP probability is greater than the 5E-07 guideline in Regulatory Guide 1.177 (see Table 8-6). This ICCDP is based on bus C which was used since it has the highest risk importance, based on RAW and F-V values, to the plant. This analysis also assumes the total 24 hour CT will be used when in practice it will be less. The internal event CDF for Ginna is approximately 8.6E-05/yr which is below the threshold for limiting plant changes that result in a small increase in CDF.

Vital AC power system design: The AC vital power system consists of two safety trains with two vital buses per train. Vital buses A and C are each normally powered from a battery-backed inverter, with additional backup from a constant voltage transformer. Vital buses B and D are each normally powered from a constant voltage transformer. When the normal power supply is lost, the alternate power source for buses A and C are batteries, for bus B it is a constant voltage transformer from a diesel backed safeguards bus, and for bus D it is a constant voltage transformer on a non-safeguards bus. For buses A and C, the ability of the batteries to supply power for greater than 6-8 hours is dependent on the loads on the bus.

Impact of loss of vital AC on plant operation: Loss of a single AC vital bus leads to loss of power to a number of components. Although the operators may need to take actions to maintain the plant in a stable condition, loss of a single bus does not lead to a reactor trip. Since the vital buses supply power to the process protection system, loss of a single bus will interrupt power to one complete channel set and lead to a partial tripped condition. For example, the trip logic will change from 2 of 4 to 1 of 3. Loss of two AC vital buses will then lead to a reactor trip since the trip logic will be met. Reactor trips due to this cause are included in the general reactor trip category.

8.4.3.3 McGuire Results Discussion

The McGuire analysis assumes the CT extension will be used to provide additional time to troubleshoot failures associated with the vital I&C components prior to energizing the 120 VAC bus from its alternate source and also to complete repair activities. Currently, no test or scheduled maintenance activities are done on the vital AC bus during power operation which make the bus inoperable or unavailable. With the extended CT, this practice will be continued. This analysis conservatively assumes that all repair activities will require the full 24 hour time. This represents an increase of at least a factor of 12 (24 hours/2 hours) over current practice. The frequency of repair activities is based on failure probabilities of the components leading to failure of powered vital buses.

The impact of the CT increase on CDF is less than the 1E-06/yr guideline for a small change as defined in Regulatory Guide 1.174 (see Table 8-6). The ICCDP probability is slightly greater than the 5E-07 guideline in Regulatory Guide 1.177 (see Table 8-6). This ICCDP is based on bus 1EKVD which was used since it has the greatest number of loads, although any of the four buses will have the same impact on CDF. This analysis also assumes the total 24 hour CT will be used when in practice it will be less. The internal event CDF for McGuire is approximately 3.3E-05/yr which is below the threshold for limiting plant changes that result in a small increase in CDF.

Vital AC power system design: The AC vital power system consists of two safety trains with two vital buses per train. Each vital bus is normally powered from an inverter. When the inverter power source is lost, the power is the provided from regulated voltage transformers off a non-Class 1E AC bus.

Impact of loss of vital AC on plant operation: Loss of a single AC vital bus leads to loss of power to a number of components. Although the operators may need to take actions to maintain the plant in a stable condition, loss of a single bus should not lead to a reactor trip. Since the vital buses supply power to the process protection system, loss of a single bus will interrupt power to one complete channel set and lead to a partial tripped condition. For example, the trip logic will change from 2 of 4 to 1 of 3. Loss of two AC vital buses will then lead to a reactor trip since the trip logic will be met and will also interrupt power to SSPS train A and B slave relays. The ESF equipment will be manually started in this case. Loss of two 120 VAC vital buses is not specifically modeled in the PRA due to the low probability of occurrence and the ability of the operators to start the required mitigation equipment.

8.4.3.4 Sequoyah Results Discussion

The Sequoyah analysis assumes the CT extension will be used to provide additional time to complete repair activities which includes identification of the failed components and switching the bus power supply to its alternate source. Currently, no test or scheduled maintenance activities are done on the vital AC bus during power operation. With the extended CT, this practice will be continued. This analysis conservatively assumes that all repair activities will require approximately 24 hours to complete. The frequency of repair activities is based on failure probabilities of the components leading to failure of powered vital buses.

The impact of the CT increase on CDF is less than the 1E-06/yr guideline for a small change as defined in Regulatory Guide 1.174 (see Table 8-6). The ICCDP probability is also smaller than the 5E-07 guideline in Regulatory Guide 1.177 (see Table 8-6). This ICCDP is based on bus 1-III which was used since it has the highest risk importance. This analysis also assumes the total 24 hour CT will be used when in practice it will be less. The internal event CDF for Sequoyah is approximately 3.8E-05/yr which is below the threshold for limiting plant changes that result in a small increase in CDF.

Vital AC power system design: The AC vital power system consists of two safety trains with two vital buses per train. Each vital bus is normally powered through transformers from the higher voltage AC buses and each AC vital bus can be powered from battery backed buses through inverters. In addition, a spare transformer supply and battery supply can be connected to any of the AC vital buses when the normal supply sources are unavailable.

Impact of loss of vital AC on plant operation: Loss of a single AC vital bus leads to loss of power to a number of components and operators need to take actions to maintain the plant in a stable condition or loss of a single bus will result in a reactor trip. Since the vital buses supply power to the process protection system, loss of a single bus will also interrupt power to one complete channel set and lead to a partial tripped condition. For example, the trip logic will change from 2 of 4 to 1 of 3. Loss of two buses will lead to a reactor trip since the trip logic will be met.

8.4.3.5 Summer Results Discussion

The Summer analysis assumes the CT extension will be used to provide additional time to complete repair activities which includes identification of the failed components and switching the bus power supply to its alternate source. Currently, no test or scheduled maintenance activities are done on the vital AC bus during power operation. With the extended CT this practice will be continued. This analysis conservatively assumes that all repair activities will require the full 24 hour time. This represents an increase of at least a factor of 12 (24 hours/ 2 hours) over current practice. The frequency of repair activities is based on failure probabilities of the components leading to failure of powered vital buses.

The impact of the CT increase on CDF is slightly larger than the 1E-06/yr guideline for a small change as defined in Regulatory Guide 1.174 (see Table 8-6). The ICCDP probability is also somewhat greater than the 5E-07 guideline in Regulatory Guide 1.177 (see Table 8-6). This ICCDP is based on bus 5901 which resulted in the highest CCDF. This analysis assumes the total 24 hour time will be used when in practice it will be less. The internal event CDF for Summer is approximately 5.6E-05/yr which is below the threshold for limiting plant changes that result in a small increase in CDF.

Vital AC power system design: The AC vital power system consists of two safety trains with two vital buses per train. Each vital bus is normally powered via an inverter with both AC power and battery sources. When the inverter power source is lost the power is provided from the 480/120 VAC stepdown transformers.

Impact of loss of vital AC on plant operation: Loss of a single AC vital bus leads to loss of power to a number of components. Although the operators may need to take actions to maintain the plant in a stable condition, loss of a single bus does not lead to a reactor trip. Since the vital buses supply power to the process protection system, loss of a single bus will interrupt power to one complete channel set and lead to a partial tripped condition. For example, the trip logic will change from 2 of 4 to 1 of 3. Loss of two AC vital buses will then lead to a reactor trip since the trip logic will be met. In addition, loss of vital buses 5901 and 5904 will lead to loss of power to slave relays which are required to actuate auxiliary feedwater. Loss of power to other combinations of two buses only impacts power to train A or train B slave relays. Under these conditions (failure of power to buses 5901 and 5904), the AFW will need to be actuated manually. This is included as a special initiator in the Summer PRA model.

8.4.4 Comparison of Results Between Plants

The overall design of the vital AC power system is similar for the plants that evaluated this completion time change. These buses are arranged in two safety trains with two vital buses per train. Loss of one bus puts the plant in a partial tripped condition and loss of two buses causes a reactor trip. In four of the plant PRAs this is modeled as a reactor trip event without any additional degraded equipment. At Sequoyah the 125 VDC system provides control power to the slave relays, therefore, loss of a vital AC bus does not impact the availability of the slave relays. At Ginna the slave relays fail to the safe or actuate position on loss of power so the function is maintained. Failure of two AC vital buses at Catawba and McGuire results in loss of power to the slave relays in addition to a reactor trip. Due to the low probability of failure of two AC vital buses and the ability of the operators to actuate mitigation equipment (AFW), the Catawba and McGuire PRAs include this event as a reactor trip and do not explicitly consider the degraded slave relays. The Summer PRA model includes this event as a reactor trip with loss of power to the slave relays which then requires an operator action to initiate AFW and other ESF components. The Summer PRA includes this as a plant specific initiating event.

All five plants indicated that the extended CT will be used to provide additional time to complete troubleshooting and repair activities. This includes additional time to connect the vital bus to its alternate power source. These analyses typically conservatively assume that the full 24 hour time will be used whenever power to a vital bus is lost. In the majority of cases, less time will actually be required.

The impact on CDF for each plant is less than 1E-06/yr except for Summer which calculates a CDF impact of 1.6E-06/yr. This is due to the Summer PRA explicitly modeling the loss of power to the slave relays, for failure of power to buses 5901 and 5904, and an operator action to actuate AFW. ICCDP values are provided for repair type activities and for test or scheduled maintenance type activities. The repair ICCDPs assume that the other train (bus) has a higher failure probability due to common cause issues. The test or scheduled maintenance ICCDPs assume that common cause failure is not applicable or has been ruled out. The ICCDP values are consistent across the plants except for Ginna. Two sets of values are provided for Ginna; one set for the highest importance bus and one set of the lowest importance bus. The values for the highest importance bus are above the ICCDP acceptance value of 5E-07, but if common cause issues are ruled out then the ICCDP values meet this acceptance criteria. The values for

the lowest importance bus meet the 5E-07 guideline. Similarly for Summer, the ICCDP value for test or scheduled maintenance activities is close to the acceptance value.

The loss of a vital AC bus is not a large contributor to plant risk. As indicated by these results, increasing the completion time to 24 hours has a relatively small impact on CDF. In addition, the ICCDP values are not outside the bounds of reasonable expectations of a 24 hour period. Finally, the CCDF values indicate that operating the plant with a 120 VAC vital bus unavailable does not represent an unacceptable risk configuration, except for the Ginna repair configuration on the highest importance bus. But if common cause issues are ruled out, then this conclusion is also applicable to Ginna.

8.5 TIER 2: AVOIDANCE OF RISK-SIGNIFICANT PLANT CONDITIONS

The objective of the second tier, which is applicable to CT extensions, is to provide reasonable assurance that risk-significant plant equipment outage configurations will not occur when equipment is out of service. If risk-significant configurations do occur, then enhancements to Technical Specifications or procedures, such as limiting unavailability of backup systems, increased surveillance frequencies, or upgrading procedures or training, can be made that avoid, limit, or lessen the importance of these configurations.

Addressing second-tier requirements is outside the scope of this document. Tier 2 requirements are plant specific limitations on plant configurations which need to be addressed on an individual plant basis. Due to the plant specific designs for the systems of interest in this WCAP, it is not possible to develop a generic set of limitations that are applicable to all the plants. Tier 2 requirements will be addressed on a utility specific basis when the changes in this WCAP are implemented at each plant.

8.6 TIER 3: RISK-INFORMED PLANT CONFIGURATION CONTROL AND MANAGEMENT

The objective of the third-tier is to ensure that the risk impact of out-of-service equipment is evaluated prior to performing any maintenance activity. As stated in RG-1.174, "a viable program would be one that is able to uncover risk-significant plant equipment outage configurations as they evolve during real-time, normal plant operation." The third-tier requirement is an extension of the second-tier requirement, but addresses the limitation of being able to identify all possible risk-significant plant configurations in the second-tier evaluation.

Addressing third-tier requirements is outside the scope of this document. This will be addressed on a utility specific basis when the changes in this WCAP are implemented at each plant and will be addressed through each plant's Maintenance Rule Program (A.4 requirement).

Table 8-1 Summary of Impact of Diesel Generator Completion Time Change on Plant Risk Completion Time Increase from 72 Hours to 7 Days

Parameter	Plant							
	Callaway	Catawba	Comanche Peak[3]	McGuire	Shearon Harris	Summer (Base)	Summer (Sens. 1)[1]	Summer (Sens. 2)[2]
CDF (72 hr CT) (per yr)	3.26E-05	5.17E-05	1.17E-05	3.13E-05	5.02E-05	5.59E-05	2.82E-05	1.99E-05
CDF (7 day CT) (per yr)	3.38E-05	5.42E-05	2.55E-05	3.18E-05	5.05E-05	5.69E-05	2.86E-05	2.00E-05
CDF Increase (per yr)	1.15E-06	2.50E-06	1.38E-05	5.00E-07	2.90E-07	1.00E-06	4.00E-07	1.00E-07
CCDF (DG in test or scheduled maintenance) (per yr)	8.26E-05	1.58E-04	1.12E-04	7.91E-05	1.73E-04	3.51E-04	1.98E-04	7.08E-05
CCDF (DG in repair) (per yr)	1.12E-04	1.93E-04	1.28E-04	9.06E-05	1.77E-04	4.56E-04	2.87E-04	9.73E-05
ICCDP (DG in test or scheduled maintenance)	9.58E-07	2.04E-06	1.87E-06	9.18E-07	2.35E-06	5.66E-06	3.25E-06	9.75E-07
ICCDP (DG in repair)	1.53E-06	2.71E-06	2.22E-06	1.14E-06	2.43E-06	7.67E-06	4.96E-06	1.48E-06

Notes:

1. Includes credit for a reduced DG mission time of 2 hours.
2. Includes credit for a reduced DG mission time of 2 hours and for an alternate AC source from the offsite hydrostation.
3. CDF and CCDF results are also applicable to a 14 day CT. The ICCDP results need to be increased by a factor of 2 for a 14 day AOT.

Table 8-2 Summary of Important PRA Assumptions and Modeling Features Relevant to the DG and DG CCF Completion Time Extensions

Parameter	Plant							
	Callaway	Catawba	Comanche Peak	Ginna	McGuire	Sequoyah	Shearon Harris	Summer (Base)[5]
DG fail to start (per demand)	6.0E-03	7.4E-03	8.4E-03	7.6E-03	6.4E-03	5.3E-03	7.1E-03	1.4E-03
DG fail to run (per hour)	6.6E-03	1.9E-03	1.5E-03	1.4E-03	5.0E-03	5.8E-03 (< 1 hr) 6.9E-04 (> 1 hr)	2.4E-03	7.3E-03
DG mission time (hours)	(1)	24	24	24	24	24	24	8
DG common cause failure model	Beta factor	MGL[4]	MGL[4]	Beta factor	MGL[4]	MGL[4]	MGL[4]	MGL[4]
DG fail to start common cause failure probability (per demand)	1.9E-04	2.3E-04	2.6E-04	1.5E-04	2.0E-04	1.6E-05	1.1E-04	4.5E-05
DG fail to run common cause failure probability[2]	1.6E-03[3]	3.3E-03	1.4E-03	1.4E-03	2.6E-03	1.3E-04	1.5E-03	2.3E-03
Loss of offsite power initiating event frequency (per year)	3.9E-02	3.6E-02	4.0E-02	7.8E-03	5.7E-02	4.9E-02	3.4E-02	3.4E-02

Notes:

1. DG mission time is either 6 hours or 2 hours depending on the specific sequence.
2. DG fail to run common cause failure probability is for the mission run time.
3. Based on a 6 hour mission time.
4. MGL – Multiple Greek Letter Method
5. Two Summer sensitivity cases were run. The first reduced the DG mission time to 2 hours and the second credited an alternate AC source and reduced the DG mission time to 2 hours.

Table 8-3 Summary of Plant Features Important to Loss of Offsite Power Events

Plant	Units at Site	Crosstie Between Units	DG Configuration	Alternate AC Source
Callaway	1	NA	Two redundant Class 1E safety trains Each powered by 1 DG	None
Catawba	2	Yes	Two redundant Class 1E safety trains Each powered by 1 DG Crosstie to other onsite unit available	Standby Shutdown Facility with one station independent DG and a makeup pump for each unit to cool RCP seals
Comanche Peak	2	No	Two redundant Class 1E safety trains Each powered by 1DG	None
Ginna	1	NA	Two redundant Class 1E safety trains Each power by 1 DG	None that can provide for RCP seal cooling
McGuire	2	Yes	Two redundant Class 1E safety trains Each powered by 1 DG Crosstie to other onsite unit available	Standby Shutdown Facility with one station independent DG and a makeup pump for each unit to cool RCP seals
Sequoyah	2	Not credited	Two redundant Class 1E safety trains Each power by 1 DG	None
Shearon Harris	1	NA	Two redundant Class 1E safety trains Each powered by 1 DG	None
Summer	1	NA	Two redundant Class 1E safety trains Each powered by 1 DG	Considering alternate source from offsite hydrostation

Table 8-4 Summary of Core Uncovery Probabilities During Station Blackout Events				
	With RCS Cooldown		Without RCS Cooldown	
Time	WOG Model	BNL Modified Model	WOG Model	BNL Modified Model
1	0.028	0.005	0.028	0.005
4	0.028	0.016	0.035	0.079
6	0.110	0.808	0.232	1.0
10	0.275	0.908	0.457	1.0
12	0.342	0.919	0.515	1.0
14	0.396	0.926	0.556	1.0

Table 8-5 Summary of Impact of Diesel Generator Common Cause Failure Evaluation Completion Time Change on Plant Risk Completion Time Increase from 24 Hours to 72 Hours					
	Plant				
Parameter	Catawba	Ginna	McGuire	Sequoyah	Shearon Harris
MTTR - for activities greater than 24 hrs in duration (hrs)	51.8	32.4	37.6	36	36
Repair frequency - for activities greater than 24 hrs in duration (per yr)	1.2	1.0	1.6	0.5	0.2
CDF Increase (per yr)	1.36E-07	3.60E-08	2.84E-08	1.86E-08	1.15E-09
Conditional CDF (DG in repair) (per yr)	1.93E-04	2.99E-04	9.06E-05	6.56E-05	1.77E-04
ICCDP (one DG out of service for repair)	1.16E-06	1.78E-06	4.87E-07	2.29E-07	1.04E-06

Table 8-6 Summary of Impact of AC Vital Bus Completion Time Change on Plant Risk Completion Time Increase from 2 Hours to 24 Hours

Parameter	Plant				
	Catawba	Ginna	McGuire	Sequoyah	Summer
CDF (2 hour CT) (per yr)	5.16E-05	8.21E-05	3.32E-05	3.77E-05	5.61E-05
CDF (24 hour CT) (per yr)	5.21E-05	8.23E-05	3.33E-05	3.77E-05	5.77E-05
CDF Increase (per yr)	5.00E-07	3.13E-07	1.00E-07	Nil	1.60E-06
CCDF (vital bus in repair) (per yr)	3.11E-04	1.05E-03[2]	2.58E-04	1.59E-04	6.43E-04
ICCDP (vital bus in repair)	7.11E-07	2.65E-06[2]	6.16E-07	3.32E-07	1.61E-06
CCDF (vital bus in test or scheduled maint.) (per yr)	1.51E-04	1.16E-04	1.70E-04	NA[3]	3.78E-04
ICCDP (vital bus in test or scheduled maint.)	2.72E-07	8.11E-08	3.75E-07	NA[3]	8.82E-07
Common cause model	MGL[1]	Beta Factor	MGL[1]	MGL[1]	MGL[1]
Common cause failure factor for failure of multiple buses	0.05	0.025	0.05	0.07	0.05

Notes:

1. MGL – Multiple Greek Letter
2. These values corresponds to the highest importance vital bus. The values for the lowest importance vital bus are CCDF = 9.06E-05/hr and ICCDP = 2.32E-08.
3. NA – Not Available

Table 8-7 Summary of Plant Features Important to Vital AC Bus Completion Time Extension

Plant	120 Volt AC Vital Bus Configuration	Loss of Vital AC Power as an Initiating Event
Catawba	Two safety trains with two vital buses per train Each vital bus normally powered from an inverter Alternate power from regulated voltage transformers from a non-Class 1E AC bus	Loss of a single vital AC bus should not lead to a reactor trip. Loss of A and D vital buses leads to a reactor trip and also interrupts power to the slave relays that actuate automatic EFS functions. Loss of any two buses leads to a reactor trip.
Ginna	Two safety trains with two vital buses per train Vital buses A and C each normally powered from a battery-backed inverter, with additional backup from a constant voltage transformer Vital buses B and D each normally powered from a constant voltage transformer, with additional backup by a common constant voltage transformer; only vital bus B is backed by a diesel/generator	Loss of a single vital AC bus does not lead to a reactor trip. Loss of two vital buses leads to a reactor trip.
McGuire	Two safety trains with two vital buses per train Each vital bus normally powered from an inverter Alternate power from regulated voltage transformers from a non-Class 1E AC bus	Loss of a single vital AC bus should not lead to a reactor trip. Loss of A and D vital buses leads to a reactor trip and also interrupts power to the slave relays that actuate automatic EFS functions. Loss of any two buses leads to a reactor trip.
Sequoyah	Two safety trains with two vital buses per train Each vital bus is normally powered from an AC source with a battery backup via an inverter A spare AC and battery backed power source can be aligned to any of the vital AC buses	Loss of a single vital AC bus will lead to a reactor trip without successful operator action to stabilize the plant. Loss of two vital buses leads to a reactor trip.
Summer	Two safety trains with two vital buses per train Each vital bus normally powered from an inverter Alternate power from battery or battery charger	Loss of a single vital AC bus does not lead to a reactor trip. Loss of two vital buses leads to a reactor trip and also interrupts power to the slave relays required to actuate auxiliary feedwater.

9 CONCLUSIONS

The following presents the conclusions of this study based on the analysis and results discussed in the previous sections.

- The overall results indicate that increasing the DG CT to 7 days (14 days for Comanche Peak), from 72 hours, has a relatively small impact on CDF and that the ICCDP values are reasonable, except possibly for the Summer Base Case. The CDF with one DG out of service for all the plants are within a factor of two of 1E-04/yr, except for the Summer Base Case. This is not considered a high risk configuration. The Summer results, when crediting the alternate AC power source and an improved DG mission time, are also acceptable.

- Moving DG test and maintenance activities to at-power operation provides a risk reduction during shutdown. As discussed, a reduction will be realized that can be traded off against the at-power risk increase further reducing the small at-power risk increase. As discussed in the quantitative assessment, ICCDPs were calculated for completing these activities during shutdown (Section 8.2.6) and at-power operation. The results indicate that the incremental risk associated with completing these activities at-power is significantly smaller than the incremental risk for completing these activities while shutdown which indicates it is lower overall risk to complete these activities while at-power. This is based on a 14 day DG outage time.

- The overall results indicate that increasing the CT to determine the operable DG is not inoperable due to common cause failure to 72 hours, from 24 hours, has a relatively small impact on CDF for all the plants. In addition, the ICCDP values are reasonable. The CDF with one DG out of service for all the plants are within a factor of three of 1E-04/yr. These conditional CDFs are generally an increase of about a factor of 3 over the CDF with nominal equipment unavailabilities. This is not considered a high risk configuration.

- The overall results indicate that the loss of a vital AC bus is not a large contributor to plant risk. As indicated by these results, increasing the CT for an inoperable vital bus to 24 hours, from 2 hours, has a relatively small impact on CDF. In addition, the ICCDP values are reasonable for a 24 hour period. Finally, the CCDF values indicate that operating the plant with a 120 VAC vital bus unavailable does not represent an unacceptable risk configuration, except for the Ginna repair configuration on the highest importance bus. But if common cause issues are ruled out, then this conclusion is also applicable to Ginna.

- The impact of these CT changes on containment risk metrics is not important in the decision process. LERF is typically dominated by containment bypass events which are, for the most part, not impacted by these changes since a coincident loss of offsite power with a containment bypass event is a very low frequency event. In addition, unavailability of AC systems does not impact containment systems independent of

systems used to prevent core damage. Therefore, CDF and ICCDP are the appropriate risk metrics.

- The impact of these CT increases on defense-in-depth was evaluated. It was concluded that this change will have no impact on defense-in-depth including maintaining a reasonable balance between prevention of core damage, prevention of containment failure, and consequence mitigation; no over reliance on programmatic activities will be required; system redundancy, independence, and diversity will be maintained; independence of barriers will not be degraded; and defenses against common cause failures and human errors will be maintained.

- The impact of the CT increases on safety margins was assessed and it was concluded that the safety analysis acceptance criteria as stated in the FSAR is not impacted by this change.

Based on these conclusions, it is recommended that the CTs for the following Technical Specifications be extended as noted. The plants that these extensions are applicable to are listed.

- LCO 3.8.1, Electrical Power Systems, AC Sources – Operating Condition B, One (required) DG inoperable

  Required Action B.4, Restore (required) DG to operable status

  Increase the CT from 72 hours to 7 days (to 14 days for Comanche Peak)

  Applicable Plants: Callaway
  Catawba
  Comanche Peak
  McGuire
  Shearon Harris
  Summer

- LCO 3.8.1, Electrical Power Systems, AC Sources – Operating Condition B, One (required) DG inoperable

  Required Actions B.3.1 or B.3.2, Determine operable DG(s) is not inoperable due to common cause failure or perform SR 3.8.1.2 for operable DG(s)

  Increase the CT from 24 hours to 72 hours

  Applicable Plants: Catawba
  Ginna
  McGuire
  Sequoyah
  Shearon Harris

- LCO 3.8.9, Electrical Power Systems, Distribution Systems – Operating Condition B, One AC vital bus inoperable

  Required Action B.1, Restore AC vital bus subsystem to operable status

Increase the CT from 2 hours to 24 hours

Applicable Plants: Catawba
Ginna
McGuire
Sequoyah
Summer

10 REFERENCES

1. Regulatory Guide 1.174, "An Approach for Using Probabilistic Risk Assessment in Risk-Informed Decisions on Plant-Specific Changes to the Licensing Basis," July 1998.

2. Regulatory Guide 1.177, "An Approach for Plant-Specific, Risk-Informed Decisionmaking: Technical Specifications," August 1998.

3. EPRI TR-110398, "Losses of Off-Site Power at U.S. Nuclear Power Plants – Through 1997", April 1998.

4. WCAP-10541, "Reactor Coolant Pump Seal Performance Following a Loss of All AC Power," November 1986.

5. EPRI TR-106306, "Losses of Off-Site Power at U.S. Nuclear Power Plants – Through 1995," April 1996.

6. NUREG/CR-4550, "Analysis of Core Damage Frequency from Internal Events."

7. WCAP-11550, "RCP Seal Integrity Generic Issue B-23, Slides Presented to the NRC on July 15, 1987."

8. NUREG/CR-5750, "Rates of Initiating Events at U.S. Nuclear Power Plants: 1987-1995," February 1999.

9. PLG-0050, "Database for Probabilistic Risk Assessment of Light Water Nuclear Reactors," August 1989.

10. NUREG-1150, "Severe Accident Risks: An Assessment for Five U.S. Nuclear Power Plants," December 1990.

APPENDIX A

PLANT PRA MODEL CHANGES SINCE THE IPE

CALLAWAY PLANT PRA MODEL CHANGES

- Valves BGHV8357A,B changed from solenoid-operated valves to motor-operated valves.
- Changed start logic for emergency DG fuel transfer pumps; they now run whenever the associated emergency DG runs.
- Positive displacement pump was replaced with a non-safety normal charging pump; independent of component cooling water and service water.
- SI Accumulator AOT increased from 1 hr to 24 hr.
- Swing battery chargers added to NK buses.
- Add check valve fail-to-open event for EGV003.
- Changed success criteria from 1/4 to 2/4 steam generator atmospheric steam dumps for secondary cooldown.
- Added essential service water train drainage event; this would preclude non-safety related service water backup for that train.
- Updated initiating event frequencies for internal events.
- Updated test/maintenance probabilities.

CATAWBA NUCLEAR STATION PRA MODEL CHANGES

- Added backup cooling to the high head safety injection centrifugal charging pumps.
- Overall model component and logic review and update.
- Updated human error reliability data.
- Update common cause data.
- Updated plant specific data.
- Update initiating event frequencies.
- Updated system notebooks.
- Updated generic data.

COMANCHE PEAK STEAM ELECTRIC STATION PRA MODEL CHANGES

- Updated and corrected the latent human reliability analysis (necessary to address NRC comments received from their review of the Comanche Peak RI in-service testing (IST) submittal).
- Updated recovery/repair of failed components and LOSP initiating event frequency (also commented on by the NRC during their review of the RI IST submittal).
- Updated system notebooks.
- Updated PRA input data including initiating event frequencies, component failure rates and unavailabilities, human error probabilities, and common cause parameters.
- Updated success criteria (used more conservative thermal-hydraulic analysis results).
- Integrated ISLOCA sequences directly into the fault tree logic.
- Incorporated into the model plant modifications and procedure changes.

MCGUIRE NUCLEAR STATION PRA MODEL CHANGES

- Overall model component and logic review and update.
- Updated human error reliability data.
- Update common cause data.
- Updated plant specific data.
- Update initiating event frequencies.
- Updated system notebooks.
- Updated generic data.

R. E. GINNA NUCLEAR POWER PLANT PRA MODEL CHANGES

None.

SEQUOYAH NUCLEAR PLANT PRA MODEL CHANGES

- Updated to account for plant operating experience.
- Incorporated a number of improvements.

SHEARON HARRIS NUCLEAR POWER PLANT PRA MODEL CHANGES

- Updated LOCA initiating event frequencies.
- Updated transient initiating event frequencies.
- Update loss of offsite power initiating event frequency.
- Updated failure probabilities for major pumps and diesels with plant specific data.
- Added system fault trees for demineralized water and main feedwater/condensate systems.
- Removed dependency of RWST makeup (Demin Water) for small break LOCA.
- Incorporated new operator recovery actions including: 1) alignment of offsite AC breakers, 2) alignment and restoration of main feedwater after trip, 3) alignment of alternative fuel oil supplies for the emergency DGs, 4) alignment of swing standby pumps for component cooling water and high head SI, and 5) operator actuation of the essential service water system on failure of normal service water return valves.
- Incorporated into the model plant modifications and procedure revisions.

V. C. SUMMER NUCLEAR STATION PRA MODEL CHANGES

- Plant modification to remove chilled water cooling to component cooling water pumps and charging pumps.
- Data update.
- Conversion of PRA model to CAFTA.
- Revised loss of offsite power frequency based an EPRI/TR-106306.
- Initiator update.
- Human error probabilities recalculated.
- Common cause failures recalculated.
- Incorporated LERF into the model.
- Removal of modules.
- Modeling improvements.
- Correction of previously identified errors.

APPENDIX B

MARKED-UP TECHNICAL SPECIFICATIONS AND BASES

ACTIONS (continued)

CONDITION	REQUIRED ACTION		COMPLETION TIME
	A.3	Restore [required] offsite circuit to OPERABLE status.	72 hours AND ~~8~~ [10] days from discovery of failure to meet LCO
B. One [required] DG inoperable.	B.1	Perform SR 3.8.1.1 for the [required] offsite circuit(s).	1 hour AND Once per 8 hours thereafter
	AND		
	B.2	Declare required feature(s) supported by the inoperable DG inoperable when its required redundant feature(s) is inoperable.	4 hours from discovery of Condition B concurrent with inoperability of redundant required feature(s)
	AND		
	B.3.1	Determine OPERABLE DG(s) is not inoperable due to common cause failure.	~~[24]~~ 72 hours
	OR		
	B.3.2	Perform SR 3.8.1.2 for OPERABLE DG(s).	~~[24]~~ 72 hours
	AND		

ACTIONS (continued)

CONDITION	REQUIRED ACTION		COMPLETION TIME
	B.4	Restore [required] DG to OPERABLE status.	~~72 hours~~ [7 days] AND ~~8~~ [10] days from discovery of failure to meet LCO
C. Two [required] offsite circuits inoperable.	C.1	Declare required feature(s) inoperable when its redundant required feature(s) is inoperable.	12 hours from discovery of Condition C concurrent with inoperability of redundant required features
	AND		
	C.2	Restore one [required] offsite circuit to OPERABLE status.	24 hours
D. One [required] offsite circuit inoperable. AND One [required] DG inoperable.		--- - NOTE - Enter applicable Conditions and Required Actions of LCO 3.8.9, "Distribution Systems - Operating," when Condition D is entered with no AC power source to any train. ---	
	D.1	Restore [required] offsite circuit to OPERABLE status.	12 hours
	OR		
	D.2	Restore [required] DG to OPERABLE status.	12 hours

3.8 ELECTRICAL POWER SYSTEMS

3.8.9 Distribution Systems - Operating

LCO 3.8.9 Train A and Train B AC, DC, and AC vital bus electrical power distribution subsystems shall be OPERABLE.

APPLICABILITY: MODES 1, 2, 3, and 4.

ACTIONS

CONDITION	REQUIRED ACTION		COMPLETION TIME
A. One or more AC electrical power distribution subsystems inoperable.		- NOTE - Enter applicable Conditions and Required Actions of LCO 3.8.4, "DC Sources - Operating," for DC trains made inoperable by inoperable power distribution subsystems.	
	A.1	Restore AC electrical power distribution subsystem(s) to OPERABLE status.	8 hours AND ~~16~~ [32] hours from discovery of failure to meet LCO
B. One or more AC vital buses inoperable.	B.1	Restore AC vital bus subsystem(s) to OPERABLE status.	~~2~~ [24] hours AND ~~16~~ [32] hours from discovery of failure to meet LCO

ACTIONS (continued)

CONDITION	REQUIRED ACTION	COMPLETION TIME
C. One or more DC electrical power distribution subsystems inoperable.	C.1 Restore DC electrical power distribution subsystem(s) to OPERABLE status.	2 hours AND [32] ~~16~~ hours from discovery of failure to meet LCO
D. Required Action and associated Completion Time not met.	D.1 Be in MODE 3. AND D.2 Be in MODE 5.	6 hours 36 hours
E. Two or more electrical power distribution subsystems inoperable that result in a loss of safety function.	E.1 Enter LCO 3.0.3.	Immediately

SURVEILLANCE REQUIREMENTS

SURVEILLANCE		FREQUENCY
SR 3.8.9.1	Verify correct breaker alignments and voltage to [required] AC, DC, and AC vital bus electrical power distribution subsystems.	7 days

BASES

ACTIONS (continued)

reasonable time for repairs, and the low probability of a DBA occurring during this period.

A.3

According to Regulatory Guide 1.93 (Ref. 6), operation may continue in Condition A for a period that should not exceed 72 hours. With one offsite circuit inoperable, the reliability of the offsite system is degraded, and the potential for a loss of offsite power is increased, with attendant potential for a challenge to the unit safety systems. In this Condition, however, the remaining OPERABLE offsite circuit and DGs are adequate to supply electrical power to the onsite Class 1E Distribution System.

The 72 hour Completion Time takes into account the capacity and capability of the remaining AC sources, a reasonable time for repairs, and the low probability of a DBA occurring during this period.

The second Completion Time for Required Action A.3 establishes a limit on the maximum time allowed for any combination of required AC power sources to be inoperable during any single contiguous occurrence of failing to meet the LCO. If Condition A is entered while, for instance, a DG is inoperable and that DG is subsequently returned OPERABLE, the LCO may already have been not met for up to ~~72 hours~~ [7 days]. This could lead to a total of ~~144 hours~~ [10 days], since initial failure to meet the LCO, to restore the offsite circuit. At this time, a DG could again become inoperable, the circuit restored OPERABLE, and an additional ~~72 hours (for a total of 6 days)~~ [7 days] allowed prior to complete restoration of the LCO. The ~~6~~ [10] day Completion Time provides a limit on the time allowed in a specified condition after discovery of failure to meet the LCO. This limit is considered reasonable for situations in which Conditions A and B are entered concurrently. The "AND" connector between the 72 hour and ~~6~~ [10] day Completion Times means that both Completion Times apply simultaneously, and the more restrictive Completion Time must be met.

Insert 1

~~As in Required Action A.2, the Completion Time allows for an exception to the normal "time zero" for beginning the allowed outage time "clock." This will result in establishing the "time zero" at the time that the LCO was initially not met, instead of at the time Condition A was entered.~~

B.1

To ensure a highly reliable power source remains with an inoperable DG, it is necessary to verify the availability of the offsite circuits on a more

Insert 1

Tracking the [10] day Completion Time is a requirement for beginning the Completion Time "clock" that is in addition to the normal Completion Time requirements. With respect to the [10] day Completion Time, the "time zero" is specified as beginning at the time LCO 3.8.1 was initially not met, instead of at the time Condition A was entered. This results in the requirement, when in this Condition, to track the time elapsed from both the Condition A "time zero," and the "time zero" when LCO 3.8.1 was initially not met.

BASES

ACTIONS (continued)

Discovering one required DG inoperable coincident with one or more inoperable required support or supported features, or both, that are associated with the OPERABLE DG, results in starting the Completion Time for the Required Action. Four hours from the discovery of these events existing concurrently is Acceptable because it minimizes risk while allowing time for restoration before subjecting the unit to transients associated with shutdown.

In this Condition, the remaining OPERABLE DG and offsite circuits are adequate to supply electrical power to the onsite Class 1E Distribution System. Thus, on a component basis, single failure protection for the required feature's function may have been lost; however, function has not been lost. The 4 hour Completion Time takes into account the OPERABILITY of the redundant counterpart to the inoperable required feature. Additionally, the 4 hour Completion Time takes into account the capacity and capability of the remaining AC sources, a reasonable time for repairs, and the low probability of a DBA occurring during this period.

B.3.1 and B.3.2

Required Action B.3.1 provides an allowance to avoid unnecessary testing of OPERABLE DG(s). If it can be determined that the cause of the inoperable DG does not exist on the OPERABLE DG, SR 3.8.1.2 does not have to be performed. If the cause of inoperability exists on other DG(s), the other DG(s) would be declared inoperable upon discovery and Condition E of LCO 3.8.1 would be entered. Once the failure is repaired, the common cause failure no longer exists, and Required Action B.3.1 is satisfied. If the cause of the initial inoperable DG cannot be confirmed not to exist on the remaining DG(s), performance of SR 3.8.1.2 suffices to provide assurance of continued OPERABILITY of that DG.

In the event the inoperable DG is restored to OPERABLE status prior to completing either B.3.1 or B.3.2, the [plant corrective action program] will continue to evaluate the common cause possibility. This continued evaluation, however, is no longer under the ~~24~~ [72] hour constraint imposed while in Condition B.

~~According to Generic Letter 84-15 (Ref. 7), [24]~~ The [72] hours ~~is reasonable~~ allowed to confirm that the OPERABLE DG(s) is not affected by the same problem as the inoperable DG.

Insert 2

Insert 2

is justified in WCAP-15622 (Ref. 13).

Reviewer's Note

Plant specific calculations using the plant specific PRA model and the methodology contained in WCAP-15622, "Risk-Informed Evaluation of Extensions to AC Electrical Power System Completion Times," are required to justify extending the Completion Times for Required Actions B.3.1 and B.3.2 to 72 hours.

If the offsite circuit is restored to OPERABLE status within the required 72 hours,

BASES

ACTIONS (continued)

B.4

Insert 3

According to Regulatory Guide 1.93 (Ref. 6), operation may continue in Condition B for a period that should not exceed 72 hours.

In Condition B, the remaining OPERABLE DG and offsite circuits are adequate to supply electrical power to the onsite Class 1E Distribution System. The 72 hour Completion Time takes into account the capacity and capability of the remaining AC sources, a reasonable time for repairs, and the low probability of a DBA occurring during this period.

[7day]

The second Completion Time for Required Action B.4 also establishes a limit on the maximum time allowed for any combination of required AC power sources to be inoperable during any single contiguous occurrence of failing to meet the LCO. If Condition B is entered while, for instance, an offsite circuit is inoperable, and that circuit is subsequently restored OPERABLE, the LCO may already have been not met for up to 72 hours. This could lead to a total of 144 hours, since initial failure to meet the LCO, to restore the DG. At this time, an offsite circuit could again become inoperable, the DG restored OPERABLE, and an additional 72 hours (for a total of 9 days) allowed prior to complete restoration of the LCO. The 9 day Completion Time provides a limit on time allowed in a specified condition after discovery of failure to meet the LCO. This limit is considered reasonable for situations in which Conditions A and B are entered concurrently. The "AND" connector between the 72 hour and 9 day Completion Times means that both Completion Times apply simultaneously, and the more restrictive Completion Time must be met.

[10]days [13] [10]

However,

[10]A (and consequently Condition D)

Insert 4

As in Required Action B.2, the Completion Time allows for an exception to the normal "time zero" for beginning the allowed time "clock." This will result in establishing the "time zero" at the time that the LCO was initially not met, instead of at the time Condition B was entered.

C.1 and C.2

Required Action C.1, which applies when two offsite circuits are inoperable, is intended to provide assurance that an event with a coincident single failure will not result in a complete loss of redundant required safety functions. The Completion Time for this failure of redundant required features is reduced to 12 hours from that allowed for one train without offsite power (Required Action A.2). The rationale for the reduction to 12 hours is that Regulatory Guide 1.93 (Ref. 6) allows a Completion Time of 24 hours for two required offsite circuits inoperable,

restore compliance with the LCO, (i.e.,

Insert 3

The [7] days provided for operation to continue while in Condition B is justified in WCAP-15622 (Ref. 13).

Reviewer's Note

Plant specific calculations using the plant specific PRA model and the methodology contained in WCAP-15622, "Risk-Informed Evaluation of Extensions to AC Electrical Power System Completion Times," are required to justify extending the Completion Time for Required Action B.4 to 7 days.

Insert 4

Tracking the [10] day Completion Time is a requirement for beginning the Completion Time "clock" that is in addition to the normal Completion Time requirements. With respect to the [10] day Completion Time, the "time zero" is specified as beginning at the time LCO 3.8.1 was initially not met, instead of at the time Condition B was entered. This results in the requirement, when in this Condition, to track the time elapsed from both the Condition B "time zero," and the "time zero" when LCO 3.8.1 was initially not met.

BASES

REFERENCES (continued)

10. Regulatory Guide 1.137, Rev. [ ], [date].

11. ASME, Boiler and Pressure Vessel Code, Section XI.

Insert 5 → 12. IEEE Standard 308-1978.

Insert 5

13. WCAP-15622, Rev. 0, May 2001.

BASES

ACTIONS (continued)

buses, load centers, motor control centers, and distribution panels must be restored to OPERABLE status within 8 hours.

Condition A worst scenario is one train without AC power (i.e., no offsite power to the train and the associated DG inoperable). In this Condition, the unit is more vulnerable to a complete loss of AC power. It is, therefore, imperative that the unit operator's attention be focused on minimizing the potential for loss of power to the remaining train by stabilizing the unit, and on restoring power to the affected train. The 8 hour time limit before requiring a unit shutdown in this Condition is acceptable because of:

a. The potential for decreased safety if the unit operator's attention is diverted from the evaluations and actions necessary to restore power to the affected train, to the actions associated with taking the unit to shutdown within this time limit and

b. The potential for an event in conjunction with a single failure of a redundant component in the train with AC power.

The second Completion Time for Required Action A.1 establishes a limit on the maximum time allowed for any combination of required distribution subsystems to be inoperable during any single contiguous occurrence of failing to meet the LCO. If Condition A is entered while, for instance, a DC bus is inoperable and subsequently restored OPERABLE, the LCO may already have been not met for up to 2 hours. This could lead to a total of 10 hours, since initial failure of the LCO, to restore the AC distribution system. At this time, a DC circuit could again become inoperable, and AC distribution restored OPERABLE. This could continue indefinitely. Insert 6

The Completion Time allows for an exception to the normal "time zero" for beginning the allowed outage time "clock." This will result in establishing the "time zero" at the time the LCO was initially not met, instead of the time Condition A was entered. The ~~16~~ hour Completion Time is an acceptable limitation on this potential to fail to meet the LCO indefinitely. [32]

Required Action A.1 is modified by a Note that requires the applicable Conditions and Required Actions of LCO 3.8.4, "DC Sources - Operating," to be entered for DC trains made inoperable by inoperable power distribution subsystems. This is an exception to LCO 3.0.6 and ensures the proper actions are taken for these components. Inoperability

Insert 6

Another scenario could involve an inoperable AC distribution subsystem followed by an inoperable AC vital bus. In this scenario, the total time in the LCO could be as long as [32] hours.

BASES

ACTIONS (continued)

of a distribution system can result in loss of charging power to batteries and eventual loss of DC power. This Note ensures that the appropriate attention is given to restoring charging power to batteries, if necessary, after loss of distribution systems.

B.1

With one or more AC vital buses inoperable, and a loss of function has not yet occurred, the remaining OPERABLE AC vital buses are capable of supporting the minimum safety functions necessary to shut down the unit and maintain it in the safe shutdown condition. Overall reliability is reduced, however, since an additional single failure could result in the minimum [required] ESF functions not being supported. Therefore, the required AC vital bus must be restored to OPERABLE status within [24] ~~2~~ hours by powering the bus from the associated [inverter via inverted DC, inverter using internal AC source, or Class 1E constant voltage transformer].

Condition B represents one or more AC vital buses without power; potentially both the DC source and the associated AC source are nonfunctioning. In this situation, the unit is significantly more vulnerable to a complete loss of all noninterruptible power. It is, therefore, imperative that the operator's attention focus on stabilizing the unit, minimizing the potential for loss of power to the remaining vital buses and restoring power to the affected vital bus.

~~This 2 hour limit is more conservative than Completion Times allowed for the vast majority of components that are without adequate vital AC power. Taking exception to LCO 3.0.2 for components without adequate vital AC power, that would have the Required Action Completion Times shorter than 2 hours if declared inoperable, is acceptable because of:~~

~~a. The potential for decreased safety by requiring a change in unit conditions (i.e., requiring a shutdown) and not allowing stable operations to continue,~~

~~b. The potential for decreased safety by requiring entry into numerous Applicable Conditions and Required Actions for components without adequate vital AC power and not providing sufficient time for the operators to perform the necessary evaluations and actions for restoring power to the affected train, and~~

If the AC bus is restored to OPERABLE status within the required 8 hours,

BASES

ACTIONS (continued)

~~c. The potential for an event in conjunction with a single failure of a redundant component.~~

[24]

The 2 hour Completion Time takes into account the importance to safety of restoring the AC vital bus to OPERABLE status, the redundant capability afforded by the other OPERABLE vital buses, and the low probability of a DBA occurring during this period.

Insert 7 → and is justified in WCAP-15622 (Ref. 4).

The second Completion Time for Required Action B.1 establishes a limit on the maximum allowed for any combination of required distribution subsystems to be inoperable during any single contiguous occurrence of failing to meet the LCO. If Condition B is entered while, for instance, an AC bus is inoperable and subsequently returned OPERABLE, the LCO may already have been not met for up to 8 hours. This could lead to a total of 10 hours, since initial failure of the LCO, to restore the vital bus distribution system. At this time, an AC train could again become inoperable, and vital bus distribution restored OPERABLE. This could continue indefinitely. to meet Insert 8

[32]

~~This Completion Time allows for an exception to the normal "time zero" for beginning the allowed outage time "clock." This will result in establishing the "time zero" at the time the LCO was initially not met, instead of the time Condition B was entered. The 16 hour Completion Time is an acceptable limitation on this potential to fail to meet the LCO indefinitely.~~

C.1 to restore compliance with the LCO, (i.e.,

With one or more DC buses or distribution panels inoperable, and a loss of function has not yet occurred, the remaining DC electrical power distribution subsystems are capable of supporting the minimum safety functions necessary to shut down the reactor and maintain it in a safe shutdown condition, assuming no single failure. The overall reliability is reduced, however, because a single failure in the remaining DC electrical power distribution subsystem could result in the minimum required ESF functions not being supported. Therefore, the [required] DC buses and distribution panels must be restored to OPERABLE status within 2 hours by powering the bus from the associated battery or charger.

Condition C represents one or more DC buses or distribution panels without adequate DC power; potentially both with the battery significantly degraded and the associated charger nonfunctioning. In this situation, the unit is significantly more vulnerable to a complete loss of all DC

Insert 7

Reviewer's Note

Plant specific calculations using the plant specific PRA model and the methodology contained in WCAP-15622, "Risk-Informed Evaluation of Extensions to AC Electrical Power System Completion Times," are required to justify extending the Completion Time for Required Action B.1 to 24 hours.

Insert 8

However, the [32] hour Completion Time provides a limit on time allowed in a specified condition after discovery of failure to meet the LCO. This limit is considered reasonable for situations in which Conditions A and B are entered concurrently. The "AND" connector between the [24] hour and [32] hour Completion Times means that both Completion Times apply simultaneously, and the more restrictive Completion Time must be met.

Tracking the [32] hour Completion Time is a requirement for beginning the Completion Time "clock" that is in addition to the normal Completion Time requirements. With respect to the [32] hour Completion Time, the "time zero" is specified as beginning at the time LCO 3.8.9 was initially not met, instead of at the time Condition B was entered. This results in the requirement, when in this Condition, to track the time elapsed from both the Condition B "time zero," and the "time zero" when LCO 3.8.9 was initially not met.

BASES

ACTIONS (continued)

power. It is, therefore, imperative that the operator's attention focus on stabilizing the unit, minimizing the potential for loss of power to the remaining trains and restoring power to the affected train.

This 2 hour limit is more conservative than Completion Times allowed for the vast majority of components that would be without power. Taking exception to LCO 3.0.2 for components without adequate DC power, which would have Required Action Completion Times shorter than 2 hours, is acceptable because of:

a. The potential for decreased safety by requiring a change in unit conditions (i.e., requiring a shutdown) while allowing stable operations to continue,

b. The potential for decreased safety by requiring entry into numerous applicable Conditions and Required Actions for components without DC power and not providing sufficient time for the operators to perform the necessary evaluations and actions for restoring power to the affected train, and

c. The potential for an event in conjunction with a single failure of a redundant component.

The 2 hour Completion Time for DC buses is consistent with Regulatory Guide 1.93 (Ref. 3). The second Completion Time for Required Action C.1 establishes a limit on the maximum time allowed for any combination of required distribution subsystems to be inoperable during any single contiguous occurrence of failing to meet the LCO. If Condition C is entered while, for instance, an AC bus is inoperable and subsequently returned OPERABLE, the LCO may already have been not met for up to 8 hours. This could lead to a total of 10 hours, since initial failure of the LCO, to restore the DC distribution system. At this time, an AC train could again become inoperable, and DC distribution restored OPERABLE. This could continue indefinitely.

This Completion Time allows for an exception to the normal "time zero" for beginning the allowed outage time "clock." This will result in establishing the "time zero" at the time the LCO was initially not met, instead of the time Condition C was entered. The ~~18~~ 32 hour Completion Time is an acceptable limitation on this potential to fail to meet the LCO indefinitely.

BASES

ACTIONS (continued)

D.1 and D.2

If the inoperable distribution subsystem cannot be restored to OPERABLE status within the required Completion Time, the unit must be brought to a MODE in which the LCO does not apply. To achieve this status, the unit must be brought to at least MODE 3 within 6 hours and to MODE 5 within 36 hours. The allowed Completion Times are reasonable, based on operating experience, to reach the required unit conditions from full power conditions in an orderly manner and without challenging plant systems.

E.1

Condition E corresponds to a level of degradation in the electrical power distribution system that causes a required safety function to be lost. When more than one inoperable electrical power distribution subsystem results in the loss of a required function, the plant is in a condition outside the accident analysis. Therefore, no additional time is justified for continued operation. LCO 3.0.3 must be entered immediately to commence a controlled shutdown.

SURVEILLANCE REQUIREMENTS

SR 3.8.9.1

This Surveillance verifies that the [required] AC, DC, and AC vital bus electrical power distribution systems are functioning properly, with the correct circuit breaker alignment. The correct breaker alignment ensures the appropriate separation and independence of the electrical divisions is maintained, and the appropriate voltage is available to each required bus. The verification of proper voltage availability on the buses ensures that the required voltage is readily available for motive as well as control functions for critical system loads connected to these buses. The 7 day Frequency takes into account the redundant capability of the AC, DC, and AC vital bus electrical power distribution subsystems, and other indications available in the control room that alert the operator to subsystem malfunctions.

REFERENCES

1. FSAR, Chapter [6].
2. FSAR, Chapter [15].
3. Regulatory Guide 1.93, December 1974.

Insert 9 →

Insert 9

4. WCAP-15622, Rev. 0, May 2001.

APPENDIX C

GENERAL PROCESS FOR EVALUATING CHANGES TO TECHNICAL SPECIFICATION COMPLETION TIMES

The following discusses the general process for using PSA to evaluate changes to allowed outage times (AOTs) specified in the plant Technical Specifications. This process will be used in the WOG Risk-Informed Technical Specification AOT Improvements Program and is consistent with Regulatory Guides 1.174 and 1.177 (References 1 and 2). The overall process is illustrated on Figure C-1 and addresses both deterministic and probabilistic issues. The process includes four basic elements:

- Statement of need for the Technical Specification change
- Assessment of deterministic impact of the change
- Assessment of the risk impact of the change
- Assessment of compensatory actions

Each step in the process is identified as either "WOG" or "utility" to indicate the primary responsibility for the step. A WOG step involves developing the general approach and requirements for all the utilities to apply in the evaluation and is the primary responsibility of the WOG program coordinators. A utility step involves plant specific evaluations and information, and needs to be completed by each utility.

REFERENCES:

1. Regulatory Guide 1.174, "An Approach for Using Probabilistic Risk Assessment in Risk-Informed Decisions on Plant-Specific Changes to the Licensing Basis," July 1998.

2. Regulatory Guide 1.177, "An Approach for Plant-Specific, Risk-Informed Decisionmaking: Technical Specification," July 1998.

GENERAL PROCESS

Step 1: Identify the Technical Specification AOT Improvements (WOG)

Utility personnel need to consider those Technical Specification requirements that are most restrictive on plant operation, and through improvements could lead to enhanced plant safety and improved plant operation and availability. Consideration needs to be given to completing repairs within the current AOT, additional test or maintenance activities that may be done at-power with an extended AOT, the importance of the system to plant safety, and the importance of the system to plant operation. The viability of completing additional activities at-power also needs to be considered. These assessments or considerations should be done on a qualitative level at this point in the program. A strong "statement of need" is required to be developed.

Step 2: Determine the Impact on Plant Safety (WOG)

Consideration needs to be given to the probabilistic/risk (Step 2A) and deterministic (Step 2B) impact of the change. The probabilistic impact is determined quantitatively via a probabilistic risk assessment. The deterministic impact is determined qualitatively.

An extension to a Technical Specification AOT will allow the system to be unavailable for additional time while the plant is at-power. It needs to be determined how this additional unavailability will impact plant safety and operation. The following questions need to be addressed:

- What event(s) is the system(s) or component(s) used to mitigate?
- What event(s) is caused by the unavailability or failure of the system(s) or component(s)?
- What event(s) can be caused by inadvertent actuation of the system(s) or component(s)?
- What backup systems, safety grade or non-safety grade, are available?

These questions can be answered by considering the response of the plant to initiating events and by considering the impact of the unavailability of the system on the plant. The PSA model event trees (plant response trees) and initiating event analysis provides valuable information in determining the impact of the AOT change on plant safety.

With regard to deterministic considerations, the design basis of the system needs to be reviewed and the effect of the unavailable system on the design basis determined. The availability of backup systems also needs to be considered to address defense-in-depth issues. Plant safety margins related to the system AOTs should also be considered and discussed. Both defense-in-depth and safety margins need to be addressed consistent with Regulatory Guide 1.174.

Step 3: Identify the Impact on the Plant PSA Model (WOG)

This step requires a review of the plant PSA model to identify all the parameters that may be impacted by the extended AOT. Consideration needs to be given to system and component unavailabilities due to test and maintenance activities, and also to component reliability. Improved maintenance could lead to longer maintenance times, but improved reliability of components. Consideration needs to be given to component unavailabilities that can cause a system to be unavailability when required to respond to an initiating event, as well as component unavailabilities that can lead to failure of a system which can cause an initiating event.

During this step it is also necessary to confirm that the PSA model properly models or represents the functioning of the system of interest in plant operation and event mitigation. Was the proper success criteria used? Is the sequence modeling correct? This is especially important for components that are not significant contributors to plant safety since a conservative approach may have been taken in modeling their response to plant events. A conservative approach which was originally acceptable, may now lead to unacceptable

conservative results. Such as using design basis success criteria when best estimate success criteria would provide a more realistic plant response and improved results.

It is also necessary to review the fault tree or unavailability modeling of the system of interest to ensure appropriate modeling. Were all the possible failure modes for the system considered? Are the component failure rates reasonable? Are plant specific values used for test and maintenance unavailabilities? Are appropriate pre-initiator human error events addressed?

It is then necessary to modify the PSA model, as discussed in Step 4, to reflect the identified changes in this step or provide the justification for any modeling exceptions. This modified model then becomes the baseline model and a quantification provides the new baseline results.

Step 4: Modify the PSA Model and AOT Related Parameters (Utility)

In this step it is necessary to modify the PSA model, as identified in Step 3, to ensure that the impact of the extended AOTs can be properly evaluated. This can include changes to:

- plant response tree (event tree) modeling
- system unavailability modeling
- component reliability
- test and maintenance unavailabilities

Plant response tree and system unavailability modeling: These elements may need to be modified to reflect the requirements identified in Step 3 to ensure that the PSA model properly models or represents the functioning of the system of interest in plant operation and event mitigation. This may require adding events and sequences to the plant response trees, requantifying the model with new success criteria, or adding additional failure modes to the system unavailability (fault tree) model. Most likely, this step will not be necessary unless it is considered appropriate to evaluate the AOT change with different success criteria than that used in the PSA model (FSAR versus best estimate).

Component reliability: With additional time to complete maintenance activities, component reliability could be improved. This reliability improvement is hard to quantify, especially when no specific component failure data is available for the extended test time, so this usually remains as an unquantified, or qualitative, benefit.

Test and maintenance unavailabilities: The primary modification to the PSA models usually involves changing the test and maintenance downtime to reflect the longer AOTs. The longer AOTs allow utilities to perform additional test and maintenance activities at power or take more time to complete current at-power activities. It is necessary to reflect these changes in the test and maintenance unavailabilities used in the PSA models. Regulatory Guide 1.177 (subsection 2.3.3.1) provides the following direction:

- Changes to the component unavailability model for test downtime and maintenance downtime should be based on a realistic estimate of expected surveillance and

maintenance practices after the TS change is approved and implemented, e.g., how often is the AOT expected to be entered for pre-planned maintenance or surveillance.

- The component unavailability model for test downtime and maintenance downtime should be based on plant-specific or industry-wide operating experience, or both, as appropriate.

To be consistent with the Regulatory Guide, it is recommended that realistic test and maintenance times with the extended AOT be used instead of assuming that the full AOT will always be used. It would not be prudent to conservatively assume that the full AOT time will be used with all test and maintenance activities. Assuming the full AOT will always be used can lead to unacceptable conservative results.

To develop realistic test and maintenance downtimes, utility personnel will need to identify how the longer AOTs will be used. With the extended AOTs will additional test activities or routine maintenance activities now be done at power or will corrective actions now take longer since round-the-clock repair efforts may be delayed? Consideration needs to be given to:

- Test activities
- Routine or scheduled maintenance activities
- Repair, corrective, or unscheduled maintenance activities

Consideration also needs to be given to the plant policy regarding the use of AOTs. Will the plant target time to repair a system while in an LCO action statement remain at its current value or increase with the increased AOT? Some plants may have a policy that all repairs will be completed within 50% of the AOT before requiring the use of shift work or overtime to complete the repair. With an AOT increasing from 72 hours to 7 days, the target time could increase significantly. If the plant policy will change, then the historical mean test and repair times may need to be increased by the ratio of the plant policy times.

The times for tests currently done at-power may not change with extended AOTs if the tests generally do not extend across work shifts. Similarly for some routine maintenance activities.

Tables C-1 and C-2 provide worksheets that provide an approach to determine the impact of an AOT increase on component or system test unavailability due to test and maintenance activities. The approach considers current test and maintenance activities, and the potential impact of the increased AOT on their corresponding test and repair times, and also new test and maintenance activities that may be considered with the extended AOTs. This approach requires that the frequencies and durations of the test and routine maintenance activities be known from past plant operation. Utility personnel then need to judge the impact of the extended AOT on these historical or estimated values. For repair (or unscheduled) activities, the frequency is expected to remain the same with the extended AOT, but the time to complete the repair may be increased. Again, it is a utility judgment to determine the impact on the repair time. If the AOT increases by a factor of 2, it could be assumed that the repair time will increase by a factor of 2 or it could be conservatively assumed that all repair activities will require the full AOT. This

later assumption is not recommended for reasons previously discussed. The plant policy on completing repairs in a certain amount of the AOT also needs to be considered.

Using these tables not only documents the impact of the extended AOT on the test and maintenance times, but they also provides a concise listing of possible activities for which the extended AOT will be used. Such information is important to the justification for the AOT extension request.

Step 5: Identify the Risk Measures (WOG)

This step identifies the risk measures that need to be assessed and are based on Regulatory Guide 1.177. Section 2.3 of this Regulatory Guide discusses a three-tiered approach for evaluating the risk associated with proposed Tech Spec AOT changes. The tiers are defined as:

- Tier 1: PRA Capability and Insights
- Tier 2: Avoidance of Risk-Significant Plant Configurations
- Tier 3: Risk-Informed Configuration Risk Management

In Tier 1 the impact of the AOT change on core damage frequency (CDF), incremental conditional core damage probability (ICCDP), large early release frequency (LERF), and incremental condition large early release probability (ICLERP) needs to be determined. ICCDP and ICLERP are defined as:

- ICCDP = [(conditional CDF with the subject equipment out of service) - (baseline CDF with nominal expected equipment unavailabilities)] x (duration of single AOT under consideration)

- ICLERP = [(conditional LERF with the subject equipment out of service) - (baseline LERF with nominal expected equipment unavailabilities)] x (duration of single AOT under consideration)

The large early release related measures only need to be considered for AOTs related to systems that can impact releases from containment.

Tier 2 requires that the licensee provide reasonable assurance that risk-significant plant equipment outage configurations will not occur when specific plant equipment is out of service consistent with the proposed Tech Spec. The Regulatory Guide states that an effective way to perform such an assessment is to evaluate equipment according to its contribution to plant risk while the equipment covered by the proposed AOT change is out of service. The Regulatory Guide further states that evaluations of such combinations of equipment out of service against Tier 1 ICCDP acceptance guideline could be one appropriate method of identifying risk-significant configurations. Tier 2 evaluations need to be done on a plant specific basis and are not part of the WOG WCAP submittal. Tier 2 requirements will be part of the individual utility LAR submittal. But utilities can perform the necessary risk calculations while completing the required Tier 1 analyses to address Tier 2 requirements. This is further discussed in Step 6.

Tier 3 requires that the licensee develop a program that ensures that the risk impact of out-of-service equipment is appropriately evaluated prior to performing any maintenance activity. The Regulatory Guide states that a viable program would be one that is able to uncover risk-significant plant equipment outage configurations in a timely manner during normal plant operation. Programs to meet Tier 3 requirements are plant specific and are not part of this WOG WCAP submittal. Plant Tier 3 programs will be addressed in individual utility LAR submittals.

Step 6: Quantify the PSA Model (Utility)

Based on the information provided in the previous steps, each individual utility will be required to modify their plant PSA model, if necessary, and determine the impact of the AOT changes on the risk measures identified in Step 5. This includes calculating new test and maintenance times as discussed in Step 4. PSA model modifications could involve changes to the system models, event trees, component failure probabilities, etc. Truncation limits will need to be set to ensure that the test and maintenance basic events in the system unavailability models appear in the results. Determination of an appropriate truncation limit will be left to the discretion of each utility.

Several sets of calculations will need to be performed. These follow:

1. The impact of individual AOT changes on CDF and LERF. First a base case quantification calculating CDF, and LERF if appropriate, with test and maintenance parameters corresponding to current AOTs, will need to be completed. Then individual cases calculating CDF, and LERF if appropriate, corresponding to each individual AOT change will need to be quantified. From these cases the impact on CDF and LERF can be determined for each AOT change under consideration. The acceptance guidelines are provided in Regulatory Guide 1.174 on Figures 3 and 4. Very small changes, as defined as less than 1.0E-06/yr on CDF and 1.0E-07/yr on LERF, are acceptable.

2. Analyses will also be required to determine ICCDP, and ICLERP if appropriate, for each AOT change being considered. These are calculated by setting the subject equipment to an out-of-service state, and calculating ICCDP, and ICLERP if appropriate, as defined in Step 5. Regulatory Guide 1.177 provides the acceptance guideline on ICCDP and ICLERP. A small quantitative impact on plant risk is acceptable. This is defined as an ICCDP of less than 5.0E-07 and an ICLERP of less than 5.0E-08. These values are to be considered guidelines only. Values greater than these may be acceptable and values less than these may be unacceptable.

3. The cumulative impact of the AOT changes on CDF and LERF will also need to be determined. The CDF and LERF impact of each individual case may be acceptable, but the cumulative impact of the package of AOT changes also needs to be considered. These calculations are completed similarly to those described in Item #1. No specific acceptance guidelines are provided in the Regulatory Guides for the impact of the package of changes. Engineering judgment must be used to determine if the change in CDF and LERF are acceptable. Consideration needs to be given to the conservative nature of the

calculations and the unquantified safety benefits. If a relatively strong argument cannot be established to justify the changes, then a tradeoff of AOTs may be required, that is, some AOTs may need to be shortened to reduce the overall impact on the risk measures. This information is used in Step 7.

4. The risk associated with operational alternatives, or the risk averted, can be used to trade off against the additional risk of remaining at power with the extended AOT. The operational alternative to remaining at power is often to shut the reactor down with the component of interest out of service, repair the component of interest in a shutdown state, and restart the reactor. There may be a higher probability of a plant trip during this transient operation than there is remaining at power for additional time. The risk averted by remaining at-power will need to be determined quantitatively if possible. A qualitative argument also holds weight if a quantitative analysis cannot be completed. An approach similar to that used in other WOG AOT submittals that only considers the risk associated with plant shutdown and startup with the rods withdrawn can be used. Section 8.4 of WCAP-14333-P-A, Revision 1 ("Probabilistic Risk Analysis of the RPS and ESFAS Test Times and Completion Times") discusses the required calculations.

5. At this point in the analysis it may be advantageous for the utility to do the necessary calculations to establish the Tier 2 restrictions. As previously discussed, the licensee needs to provide reasonable assurance that risk-significant plant equipment outage configurations will not occur when specific plant equipment is out of service consistent with the proposed Tech Spec to meet the objective of Tier 2. The Regulatory Guide states that an effective way to perform such an assessment is to evaluate equipment according to its contribution to plant risk while the equipment covered by the proposed AOT change is out of service. Evaluations of such combinations of equipment out of service against Tier 1 ICCDP acceptance guideline could be one appropriate method of identifying risk-significant configurations. Another method could be to do a comparison of the system level risk importances between the plant configurations with all equipment available and with the plant equipment of interest out of service. Systems that are more risk significant in the outage configuration than in the all equipment available configuration are candidates for Tier 2 requirements. This would only need to be done for the component outage configurations that result in significant CDF or LERF levels, that is, a CDF or LERF level that equates to an unacceptably high risk. As previously noted, Tier 2 evaluations need to be done on a plant specific basis and are not part of the WOG WCAP submittal. Tier 2 requirements will be part of the individual utility LAR submittals.

6. Sensitivity and uncertainty analyses related to assumptions in the development of the initial PRA model or in assessing the AOT increase may be required. If assumptions can have a significant impact on the results of the evaluations, sensitivity studies will be required. One such sensitivity study could involve the use of best estimate success criteria as opposed to FSAR or design basis success criteria. Appropriate sensitivity studies will be defined for each AOT being analyzed.

Step 7: Preliminary Results Collection and Discussion (WOG)

Results will be informally collected for each AOT change evaluated and discussed among the participants. This is a screening step that is included to determine if the results are acceptable prior to the utilities finalizing their calculations and providing the information specified in Step 8. If the results are acceptable, then the program proceeds to Step 8. If not, then the changes being considered need to be revised and/or compensatory actions need to be considered and the model re-quantified. The compensatory actions will consider the availability of backup equipment that can be used to perform a similar function in event mitigation and methods that can be used to reduce the probability of an event from occurring that may require the systems of interest. This could also include demonstrating that backup systems are operable, reviewing emergency response procedures, placing controls on equipment configurations, etc.

Consideration needs to be given to the averted risk. That is, what mode transition and shutdown risk can be averted by avoiding a shutdown related to the extended AOTs. This is discussed in Step 6.

A review of the cumulative risk is also important at this point. The impact of all the AOT changes on CDF and LERF will need to be determined. If the increase in CDF is relatively large, then a strong argument will need to be generated to show why the increase is acceptable. If a relatively strong argument cannot be established to justify the changes, then a tradeoff of AOTs may be required, that is, some AOTs may need to be shortened to reduce the overall impact on the risk measures.

Step 8: Final Results Collection and Review (WOG)

A list of information each utility is required to provide will be specified for each AOT application. Such information will include:

- System description
- Events requiring the system for mitigation
- System success criteria for each event
- System fault tree model at a level high enough to show how test and maintenance unavailabilities are modeled
- Worksheets for determining the impact of increased AOTs on mean test downtime (consistent with Step 4)
- Worksheets for determining the impact of increased AOTs on mean maintenance downtime (consistent with Step 4)

- PSA model quantification results (consistent with Step 6)

  — CDF (base and outage configuration)
  — LERF (base and outage configuration, if applicable)
  — ICCDP (outage configuration)
  — ICLEFP (outage configuration, if applicable)
  — Cumulative impact on CDF
  — Cumulative impact on LERF (if applicable)
  — Operational alternative risk (risk averted)
  — Results from sensitivity analyses

The results provided will be reviewed for accuracy and consistency. It is expected that similar plants applying similar assumptions will have similar results. The differences will be reviewed with the appropriate utilities and addressed. The similarities and differences will be discussed in the final report.

Step 9: Identify Change Requests (WOG)

A review of the quantitative results from the risk analysis with consideration given to quantitative and qualitative benefits of the AOT changes and the deterministic assessment will determine the AOT changes to request. A risk neutral or small risk increase will be the objective of the analysis. Small increases in risk are acceptable as long as they are consistent with Regulatory Guides 1.174 and 1.177.

Step 10: Documentation (WOG)

The documentation will be provided in a WCAP. The following identifies the major sections of the WCAP.

- Introduction
- System Technical Specifications
- Need for the Allowed Outage Time Change
- Technical Specification Change Request
- NRC Meeting Summary (if applicable)
- Design Basis Requirements and Impact
- System Description
- Assessment of Impact on Risk
- Impact on Defense-In-Depth and Safety Margins
- Conclusions
- References

Table C-1 Worksheet for Determining the Impact of Increased AOTs on Mean Test Downtimes

Test Activity	Current (C) or New (N) Activity	Test Frequency	With Current AOT		Impact of AOT Change on Test Downtime[2]	With Extended AOT[3]	
			Downtime per Test Activity (hr)	Test Activity Unavail.[1]		Downtime per Test Activity (hr)	Test Activity Unavail.[1]
Total	---	---	---		---	---	

Notes:

1. Test Activity Unavailability = Test Frequency x Downtime per Test Activity
2. This should be given as a factor increase, such as 2X. Justification for this factor will need to documented. This can be done as a footnote in this table.
3. Downtime per Test Activity (with extended AOT) = Impact of AOT Change on Test Downtime x Downtime per Test Activity (with current AOT)

Table C-2 Worksheet for Determining the Impact of Increased AOTs on Mean Maintenance Downtimes

Maintenance Activity (Scheduled (S) or Repair (R))	Current (C) or New (N) Activity	Maintenance Frequency	With Current AOT		Impact of AOT Change on Maint. Downtime[2]	With Extended AOT[3]	
			Downtime per Maint. Activity (hr)	Maint. Activity Unavail.[1]		Downtime per Maint. Activity (hr)	Maint. Activity Unavail.[1]
Total	---	---	---		---	---	

Notes:

1. Maintenance Activity Unavailability = Maintenance Frequency x Downtime per Maintenance Activity
2. This should be given as a factor increase, such as 2X. Justification for this factor will need to documented. This can be done as a footnote in this table.
3. Downtime per Maintenance Activity (with extended AOT) = Impact of AOT Change on Maintenance Downtime x Downtime per Maintenance Activity (with current AOT)

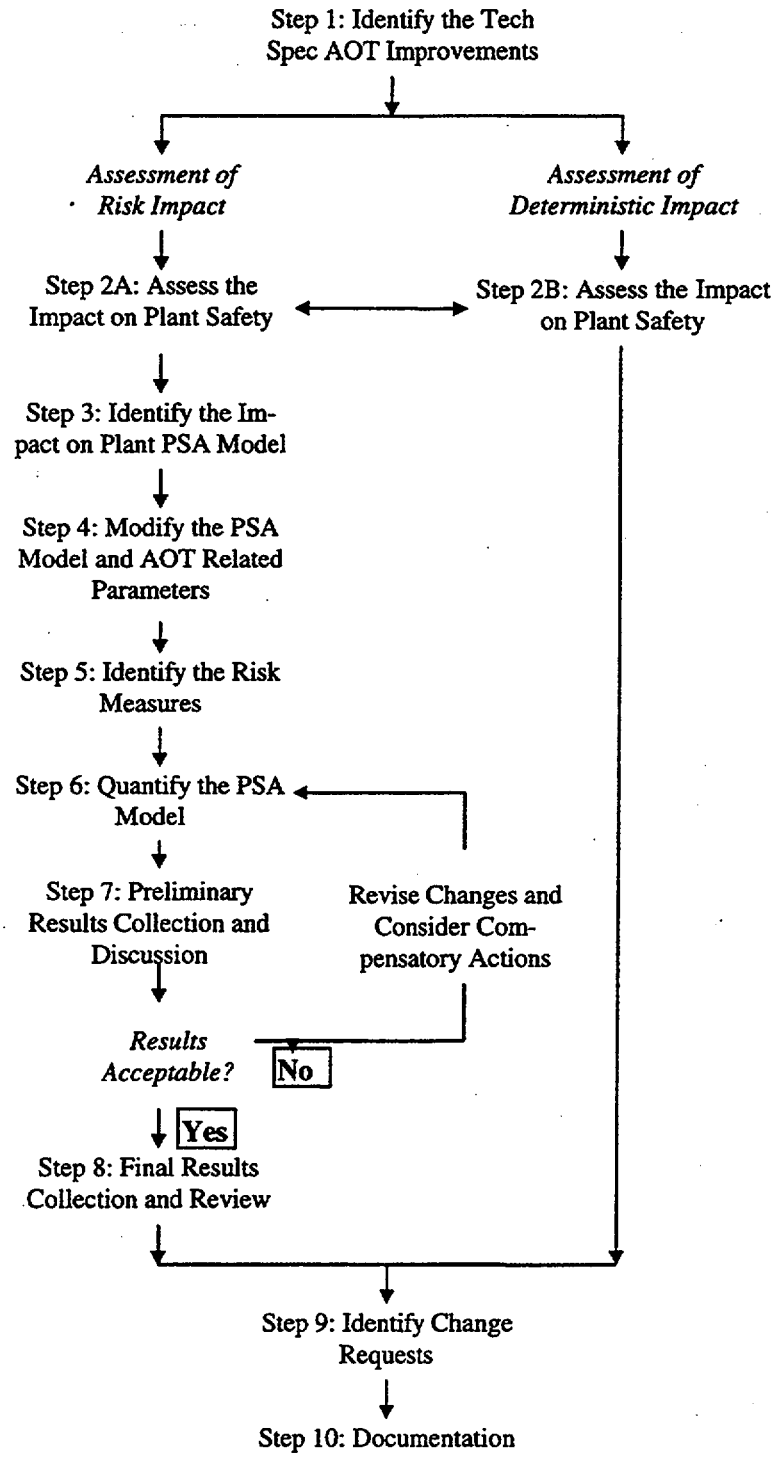

Figure C-1 Process for Assessing the Impact of Changes to Technical Specification Allowed Outage Times on Plant Risk

APPENDIX D

SPECIFIC ANALYSIS REQUIREMENTS FOR EVALUATING CHANGES TO TECHNICAL SPECIFICATION COMPLETION TIME:

LCO 3.8.1, ELECTRICAL POWER SYSTEMS, AC SOURCES – OPERATING CONDITION B, ONE (REQUIRED) DG INOPERABLE REQUIRED ACTION B.4, RESTORE (REQUIRED) DG TO OPERABLE STATUS

Evaluate increasing the completion time from 72 hours to 7 days

1. Step 1: Identify the Technical Specification AOT Improvement

Required Action B.4 Restore DG to operable status with a completion time (allowed outage time/AOT) of 72 hours

Evaluate extending the completion time to 7 days

Background information: The current 72 hours is based on a qualitative assessment that indicates it takes into account the capacity and capability of the remaining AC sources, a reasonable time for repairs, and the low probability of a DBA occurring during this period (from the Improve Tech Spec Bases).

2. Step 2: Determine the Impact on Plant Safety

Both probabilistic and deterministic impacts need to be considered. At this point, only the probabilistic impact will be considered. The AOT extension will allow the DGs to be unavailable for additional time while the plant is at-power. It needs to be determined how this additional unavailability will impact plant safety and operation. The following questions are considered to identify the impact.

What event(s) are the DGs used to mitigate?

The DGs are credited: 1) following loss of offsite power events to energize the Class 1E AC buses, and 2) may also be credited to energize the Class 1E AC buses if the bus should lose power for reasons other than a loss of offsite power event. It is not necessary to explicitly model the DGs in the second role since there are Tech Spec controls that limit plant operation if power to the Class 1E buses is lost for reasons other than loss of offsite power, in addition, loss of power to a single bus is a low probability occurrence. DGs in the second role are not always credited in PRAs which is considered a conservative approach. The loss of offsite power is the critical event the DGs are used to mitigate. For this event the DGs provide power to the Class 1E AC electrical power distribution subsystem so the plant can be successfully shutdown. A successful shutdown requires decay heat removal and continued cooling of the RCP seals.

What event(s) can be caused by the unavailability or failure of the DGs?

The DGs are used in standby mode to energize the Class 1E electrical system following failure of the preferred power source. Failure of the DGs will not initiate a plant transient.

What event(s) can be caused by inadvertent actuation of the DGs?

The DGs are used in standby mode to energize the Class 1E electrical system following failure of the preferred power source. Inadvertent actuation of the of a DG will not cause a plant transient.

What backup systems, safety grade or non-safety grade, are available?

The DGs are a backup system to the preferred source of power to the Class 1E electrical system. Typically there no backup systems to the DGs. Some plants have alternate sources of AC power that are included in the PRA such as onsite or offsite gas turbine/generators. Consideration needs to be given to including such sources in the PRA model. If alternate sources of AC power are available, they should be included.

3. Step 3: Identify the Impact on the Plant PRA Model

The following discusses the DG modeling requirements in the at-power PRA. Utilities are required to ensure their at-power PRA model is consistent with the following in Step 4 of this process. It is expected that no changes to plant specific PRA models will be required to incorporate the DGs into these models. If necessary, shutdown risk will be addressed at a later time on a generic basis since many utilities do not currently have the capability to quantify a plant specific, shutdown PRA model.

DG unavailability model

The DG unavailability model should include the DG "fail to start" and "fail to run" failure modes. It should also include any testing activities and maintenance activities that can cause the DG to be unavailable, pre-initiator operator errors that can cause the DGs to fail, and common cause failures that can cause multiple DG failures. The maintenance activities should include preventive (routine) and corrective (or repair) activities. In addition, required support systems need to be included.

- DG "fail to start" and "fail to run" failure modes: These should be plant specific values based on DG operational history. The "fail to run" failure mode is typically an hourly value and needs to be account for the required run time. This run time is usually less than the standard 24 mission time used for many other events since offsite power is typically recovered well before 24 hours. In addition, the component reliability can be impacted by the AOT extension; the additional time to complete maintenance activities can improve the component's performance. This is discussed further in Step 4.

- Common cause failure: Common cause failure of multiple DGs needs to be included in the model since all DGs will be required to start and run on a LOSP event.

- Pre-initiator human error events: Pre-initiator human error events, such as those that could result from re-assembling the DG following a maintenance activity, are accounted for in the DG failure probability, so these to not need to be explicitly modeled.

- Test activities and maintenance activities: DG unavailability due to both test and maintenance activities needs to be included in the model. This is typically done with basic events for each activity under the DG unavailable event. It is necessary to include these basic events in the PRA model since the impact of the AOT change primarily affects component unavailability due to test and maintenance activities. Step 4 discusses the approach for determining the test and maintenance unavailability values for the current and extended AOTs.

- Support systems: DGs typically require cooling from the service water system and may require room cooling to function. Both need to be included in the model or reasons stated why they are not.

DG modeling to mitigate LOSP event

The DGs are modeled as a source of electrical power to the Class 1E electrical system. There are numerous DG/Class 1E bus configurations in W NSSS plants depending on the DG capacity, availability of swing DGs, NSSS units at the site, and cross connects between the units on multi-unit sites. The simplest configuration is the two Class 1E bus arrangement with one DG dedicated to each bus.

On loss of offsite power the DGs start and the loads on the Class 1E buses are loaded back on the buses via the load sequencer. The particular method and details for modeling this is dependent on the type of PRA approach used; support state model or linked fault tree. In the plant specific PRA model it is important that the following be included in the model with regard to the LOSP event and possible consequential station blackout:

- offsite power recovery
- turbine-driven auxiliary feedwater pump availability for station blackout
- RCP seal LOCA model
- alternate RCP seal cooling systems, if available
- availability of DC power for turbine-driven AFW pump operation
- reactor coolant system depressurization

For dual unit sites, consideration needs to be given to single unit and dual unit loss of offsite power events.

4. Step 4: Modify the PRA Model and AOT Related Parameters (utility action)

The utility is required to modify their plant PRA to reflect any changes identified in Step 3. This includes changes to the LOSP/SBO event modeling and DG unavailability modeling.

Plant response tree modeling and system unavailability modeling

It is expected that no changes to the LOSP/SBO event will need to be made by utilities. The important modeling considerations provided in Step 3 are usually addressed in PRA models. With regard to the RCP seal LOCA model, a specific model will not be recommended at this point since this is an open industry item that is currently being addressed in a WOG program. It is also expected that no changes to DG unavailability modeling will be necessary; the modeling requirements discussed in Step 3 are standard.

Component reliability

As noted in Step 3, the component reliability can be impacted by the AOT extension. The additional time to complete maintenance activities can improve the component's performance. This can be due to improve maintenance activities or additional time to reassemble and realign the component within its system. Typically the impact on component reliability is not easily determined. For this study, it will be conservatively assumed that the DG's reliability is not impacted by the AOT extension.

Test and maintenance unavailabilities

The most critical part of the analysis is determining how the extended AOT will impact the DG availability. This represents the primary change to the PRA for this evaluation. The AOT will impact the unavailability of the DG due to maintenance activities (corrective and preventive) and test activities. A longer AOT will allow the utility to:

- perform additional test activities at-power,
- perform additional preventive maintenance activities at-power, and
- complete repair activities in a more relaxed atmosphere (i.e., taking more time).

The impact of any additional activities and additional time to complete current activities on the DG unavailability needs to be assessed. It is recommended that realistic test and maintenance times with the extended AOT be used instead of assuming that the full AOT will always be used. This is consistent with Regulatory Guide 1.177. It is not prudent to conservatively assume that the full AOT time will be used with all test and maintenance activities since such an assumption can lead to unacceptable conservative results.

To develop realistic test and maintenance downtimes, utility personnel will need to identify how the longer AOTs will be used. With the extended AOTs will additional DG test activities or routine maintenance activities now be done at power or will corrective actions now take longer since round-the-clock repair efforts may be delayed? Will activities typically performed

during shutdown now be completed while the plant is at-power? Consideration needs to be given to:

- Test activities,
- Routine or scheduled maintenance activities, and
- Repair, corrective, or unscheduled maintenance activities.

Consideration also needs to be given to the plant policy regarding the use of AOTs. Will the plant target time to repair a system while in an LCO action statement remain at its current value or increase with the increased AOT? Some plants may have a policy that all repairs will be completed within 50% of the AOT before requiring the use of shift work or overtime to complete the repair. With an AOT increasing from 72 hours to 7 days, the target time could increase significantly. If the plant policy will change, then the historical mean test and repair times associated with the 72 hour AOT may need to be increased by the ratio of the plant policy times.

The times for tests currently done at-power may not change with extended AOTs if the tests generally do not extend across work shifts. Similar arguments can be applied to some routine maintenance activities.

The impact of the extended AOT on test and maintenance times is a plant specific assessment that needs to be completed by the utility. The attached tables are provided to help with this assessment. Tables D-1 and D-2 are worksheets that provide an approach to determine the impact of the AOT increase on DG unavailability due to test and maintenance activities. The approach considers current test and maintenance activities, and the potential impact of the increased AOT on their corresponding test and repair times, and also new test and maintenance activities that may be considered with the extended AOTs. This approach requires that the frequencies and durations of the test and routine maintenance activities be known from past plant operation. Utility personnel then need to judge the impact of the extended AOT on these historical or estimated values.

For repair (or unscheduled) activities, the frequency is expected to remain the same with the extended AOT, but the time to complete the repair may be increased. Again, it is a utility judgment to determine the impact on the repair time.

Several approaches are possible for estimating the impact of the extended AOT:

- increase the maintenance time by the ratio of AOT times: 2.3 (7 days/3 days)

- re-analyze the plant specific DG maintenance activity data to determine the impact of the AOT extension on each activity (short repair times may not be impacted) and then calculate a new repair time

- assumed that all maintenance activities will require the full AOT (this assumption is not recommended for reasons previously discussed).

The plant policy on completing repairs in a certain amount of the AOT also needs to be considered. The approach selected is up to the utility and should be noted on the corresponding table.

These tables will be used to document the impact of the extended AOT on the test and maintenance times. They also provide a concise listing of possible activities for which the extended AOT will be used. The later information is important to the justification for the AOT extension request.

5. Step 5: Identify the Risk Measures

The risk measures that need to be assessed are based on Regulatory Guide 1.177. Section 2.3 of this Regulatory Guide discusses a three-tiered approach for evaluating the risk associated with proposed Tech Spec AOT changes. The tiers are defined as:

- Tier 1: PRA Capability and Insights
- Tier 2: Avoidance of Risk-Significant Plant Configurations
- Tier 3: Risk-Informed Configuration Risk Management

In Tier 1 the impact of the AOT change on core damage frequency (CDF), incremental conditional core damage probability (ICCDP), large early release frequency (LERF), and incremental condition large early release probability (ICLERP) needs to be determined. The large early release related measures only need to be considered for AOTs related to systems that can impact releases from containment. For the DG AOT changes, the LERF measures are not necessary, only CDF and ICCDP are required. ICCDP is defined as:

- ICCDP = [(conditional CDF with the subject equipment out of service) - (baseline CDF with nominal expected equipment unavailabilities)] x (duration of single AOT under consideration)

Tier 2 requires that the licensee provide reasonable assurance that risk-significant plant equipment outage configurations will not occur when specific plant equipment is out of service consistent with the proposed Tech Spec. Tier 3 requires that the licensee develop a program that ensures that the risk impact of out-of-service equipment is appropriately evaluated prior to performing any maintenance activity. Neither Tier 2 or Tier 3 requirements will be part of this WOG WCAP submittal, but will be part of the licensee's LAR request.

6. Step 6: Quantify the PRA Model (utility action)

Each utility is required to quantify their PRA model to determine the impact on the risk measures identified in Step 5. The calculations that need to be done follow:

1. Impact on CDF: The impact of the AOT changes on CDF requires two quantifications of the PRA model. The first is a base case quantification calculating CDF with test and maintenance parameters corresponding to current AOTs. The second quantification provides CDF that corresponds to the increased AOT. For this case it is necessary to

change the DG unavailability due to test and maintenance activities. From these cases the impact on CDF will be determined.

2. Calculation of ICCDP: Analyses will also be required to determine ICCDP for a DG AOT of 7 days. This is calculated by setting the subject equipment to an out-of-service state and re-quantifying the PRA model. This provides the conditional core damage frequency (CCDF). Then the ICCDP is calculated as defined in Step 5. If the DGs are not of equal importance to plant risk, then it is recommended that the most limiting case be used, that is, the DG with the highest importance.

   The CCDF and ICCDP need to be calculated for two situations. The first situation is when one DG is unavailable for testing or routine maintenance and the second is when one DG is unavailable for repair. For the test or routine maintenance situation, the available DG(s) will fail randomly and the corresponding random failure probabilities for the DG(s) should be used. In the repair situation there is no information indicating that the available DG(s) will not fail for the same reason the inoperable DG failed (a common cause failure). In this case, the available DG(s) can fail due to common cause issues and the failure probabilities of the operable DG(s) that should be used is the common cause factor. This would be a Beta factor for the second DG of a two train system.

3. Cumulative impact: At this point the cumulative impact of the AOTs on CDF is not necessary.

4. Risk benefits: The risk associated with operational alternatives, or the risk averted, can be used to trade off against the additional risk of remaining at power with the extended AOT. The operational alternative to remaining at power for additional time is to shut the plant down with the component of interest out of service, repair the component of interest in a shutdown state, and restart the plant. Plant specific calculations will not be required for step. If necessary, generic calculations performed by Westinghouse will be used.

5. Tier 2 restrictions: At this point in the analysis it may be advantageous for each utility to do the necessary calculations to establish the Tier 2 restrictions. The results of this analysis are not to be submitted to Westinghouse as part of the evaluation. As previously noted, Tier 2 evaluations will be done on a plant specific basis and will not be part of the WOG WCAP submittal. Tier 2 requirements will be part of the individual utility LAR submittals. Information on determining Tier 2 requirements is provided in document titled "General Process for Evaluating the Safety Impact of Changes to Technical Specification Allowed Outage Times" previously provided to all WOG RBTWG members.

6. Sensitivity and uncertainty analyses: No sensitivity or uncertainty analyses have been identified at this time for all plants to perform, but several sensitivity studies are required to respond to expected NRC requests. See the "NRC's Request for Additional Information to the CEOG" in Section 7 of this appendix.

7. Step 7: Preliminary Results Collection and Discussion

Utilities are required to provide the following information to Westinghouse to organize, review, and present to the RBTWG for discussion and assessment. This should be provided on Table D-3 and with supplemental sheets as appropriate.

- DG fail to start failure probability
- DG fail to run failure probability
- DG required mission (run) time
- DG common cause failure model
- DG fail to start common cause probability
- DG fail to run common cause probability
- CDF (current AOT), i.e., base value
- CDF (proposed AOT)
- CDF increase; (CDF (proposed AOT) – CDF (current AOT))
- CCDF (with one DG out of service due to test or scheduled maintenance activities)
- CCDF (with one DG out of service due to corrective/repair maintenance activities)
- ICCDP (for the 7 day AOT with one DG out of service due to test or scheduled maintenance activities)
- ICCDP (for the 7 day AOT with one DG out of service due to corrective/repair maintenance activities)
- Tables D-1 and D-2 defining how the AOT extension impacts the test and maintenance unavailabilities.
- A brief description or diagram of the ESF AC power distribution system including DG arrangement.
- Reactor coolant pump seal LOCA model and probability of core uncovery from SBO events within one hour.
- Changes made to the PRA model since the model submitted to the NRC to meet the IPE requirement.

NRC's Request for Additional Information to the CEOG

The following additional information is requested based on the NRC's Requests for Additional Information to the CEOG for their DG AOT extension submittal.

- Provide the LOSP initiating event frequency and its basis.

- Provide a short discussion on the LOSP events that have occurred at your plant and compared this frequency to the LOSP frequency used in your PRA model.

- If your plant is capable of cross-connecting the redundant engineered safety buses, explain how this is modeled in the PRA. How long does it take to establish the cross-tie? How much credit is taken? (this can be shown via a sensitivity study to determine the impact on CDF of crediting the cross-tie)

- If your plant has a alternate AC (ACC) source, is it covered under your Maintenance Rule Program? If not, why not? Is the ACC source hardened against severe weather? How much credit has been taken with respect to the ACC source's ability to decrease the CDF? (this can be shown via a sensitivity study to determine the impact on CDF of crediting the ACC)

- Provide the CDF for SBO events as reported for the Individual Plant Examination (IPE). Provide the failure rates for DG failure to start (per demand) and failure to run (per hour), and the LOSP initiating event frequency used in the IPE.

- Provide the CDF for SBO events as calculated for this study and explain the difference between this value and the value reported for the IPE. Consider revised LOSP IE frequency, credit for AAC sources, credit for cross-ties, and the AOT change.

8. Step 8: Final Result Collection and Review

The utilities are not required to provide any information or perform any calculations at this time to support this step.

9. Step 9: Identify Change Requests

The utilities are not required to provide any information or perform any calculations at this time to support this step.

10. Step 10: Documentation

The utilities are not required to provide any information or perform any calculations at this time to support this step.

Table D-1 Worksheet for Determining the Impact of Increased AOTs on Mean Test Downtimes (LCO 3.8.1, Action B.4 - DG AOT)

Plant Name:

Test Activity	Current (C) or New (N) Activity	Test Frequency	With Current AOT		Impact of AOT Change on Test Downtime[2]	With Extended AOT[3]	
			Downtime per Test Activity (hr)	Test Activity Unavail.[1]		Downtime per Test Activity (hr)	Test Activity Unavail.[1]
Total	---	---	---		---	---	

Method used to determine test time with extended AOT:

Notes:

1. Test Activity Unavailability = Test Frequency x Downtime per Test Activity
2. Note above the method(s) used for determining the repair and maintenance times with the extended AOT. If a factor increase is used (such as 2X), add the factor to this column.
3. Downtime per Test Activity (with extended AOT) = Impact of AOT Change on Test Downtime x Downtime per Test Activity (with current AOT)

Table D-2 Worksheet for Determining the Impact of Increased AOTs on Mean Maintenance Downtimes (LCO 3.8.1, Action B.4 - DG AOT)

Plant Name:

Maintenance Activity (Note as either Scheduled (S) or Repair (R))	Current (C) or New (N) Activity	Maintenance Frequency	With Current AOT		Impact of AOT Change on Maint. Downtime[2]	With Extended AOT[3]	
			Downtime per Maint. Activity (hr)	Maint. Activity Unavail.[1]		Downtime per Maint. Activity (hr)	Maint. Activity Unavail.[1]
Total	---	---	---		---	---	

Method used to determine repair time with extended AOT:

Method used to determine scheduled maintenance time with extended AOT:

Notes:

1. Maintenance Activity Unavailability = Maintenance Frequency x Downtime per Maintenance Activity
2. Note above the method(s) used for determining the repair and maintenance times with the extended AOT. If a factor increase is used (such as 2X), add the factor to this column.
3. Downtime per Maintenance Activity (with extended AOT) = Impact of AOT Change on Maintenance Downtime x Downtime per Maintenance Activity (with current AOT).

Table D-3 Data Collection Form (LCO 3.8.1, Action B.4 - DG AOT)

Plant Name:

Required Information	Parameter
DG fail to start failure probability	
DG fail to run failure probability	
DG required mission (run) time in hours	
DG common cause failure model	
DG fail to start common cause failure probability (all DGs)	
DG fail to run common cause failure probability (all DGs)	
CDF (current AOT)	
CDF (proposed AOT)	
CDF increase	
CCDF (with one DG out of service due to test or scheduled maintenance activity)	
CCDF (with one DG out of service due to corrective/repair maintenance activity)	
ICCDP (with one DG out of service due to test or scheduled maintenance activity)	
ICCDP (with one DG out of service due to corrective/repair maintenance activity)	

Supply additional sheets to respond to the following:

- Tables D-1 and D-2 defining how the AOT extension impacts the test and maintenance unavailabilities.
- A brief description or diagram of the ESF AC power distribution system including DG arrangement.
- Reactor coolant pump seal LOCA model and probability of core uncovery from SBO events within one hour.
- Changes made to the PRA model since the model submitted to the NRC to meet the IPE requirement (short brief statements).
- Provide the LOSP initiating event frequency and its basis.

Table D-3 Data Collection Form (LCO 3.8.1, Action B.4 - DG AOT) (cont.)
• Provide a short discussion on the LOSP events that have occurred at your plant and compared this frequency to the LOSP frequency used in your PRA model. • If your plant is capable of cross-connecting the redundant engineered safety buses, explain how this is modeled in the PRA. How long does it take to establish the cross-tie? How much credit is taken? (this can be shown via a sensitivity study to determine the impact on CDF of crediting the cross-tie) • If you plant has a alternate AC (ACC) source, is it covered under your Maintenance Rule Program? If not, why not? Is the ACC source hardened against severe weather? How much credit has been taken with respect to the ACC source's ability to decrease the CDF? (this can be shown via a sensitivity study to determine the impact on CDF of crediting the ACC) • Provide the CDF for SBO events as reported for the Individual Plant Examination (IPE). Provide the failure rates for DG failure to start (per demand) and failure to run (per hour), and the LOSP initiating event frequency used in the IPE. • Provide the CDF for SBO events as calculated for this study and explain the difference between this value and the value reported for the IPE. Consider revised LOSP IE frequency, credit for AAC sources, credit for cross-ties, and the AOT change.

APPENDIX E

SPECIFIC ANALYSIS REQUIREMENTS FOR EVALUATING CHANGES TO TECHNICAL SPECIFICATION COMPLETION TIME:

LCO 3.8.1, ELECTRICAL POWER SYSTEMS, AC SOURCES – OPERATING CONDITION B, ONE (REQUIRED) DG INOPERABLE REQUIRED ACTIONS B.3.1 OR B.3.2, DETERMINE OPERABLE DG(S) IS NOT INOPERABLE DUE TO COMMON CAUSE FAILURE OR PERFORM SR 3.8.1.2 FOR OPERABLE DG(S)

Evaluate increasing the completion time from 24 hours to 72 hours

1. Step 1: Identify the Technical Specification AOT Improvement

Required Action B.3.1 Determine operable DG(s) is not inoperable due to common cause failure

OR

Required Action B.3.2 Perform SR 3.8.1.2 for operable DG(s)

One of these actions needs to be completed with a completion time of 24 hours.

Evaluate extending this completion time to 72 hours.

Background Information: The objective of this action (or both actions) is to ensure that the operable DG will not fail due to common cause, i.e., it will not fail for the same reason the inoperable DG failed. This can be shown either by testing the operable DG(s) per SR 3.8.1.2 or via other methods. Action B.3.1 provides an allowance to avoid unnecessary testing of the operable DG(s).

According to Generic Letter 84-15, [24] hours is reasonable to confirm that the operable DG(s) is not affected by the same problem as the inoperable DG (from the Improved Tech Spec Bases).

2. Step 2: Determine the Impact on Plant Safety

Both probabilistic and deterministic impacts need to be considered. At this point, only the probabilistic impact will be considered. This AOT extension will allow the operable DG(s) to potentially fail due to the same reason the inoperable DG has failed for additional time. Therefore, for repair activities, until it can be demonstrated that the operable DG is not inoperable due to common cause failure, the failure probability of the operable DG(s) needs to be assumed to be equal to the appropriate common cause failure factor, not the random failure probability.

3. Step 3: Identify the Impact on the Plant PRA Model

See Step 3 in Appendix D.

4. Step 4: PRA Model Changes

The PRA model changes are defined and implemented in Steps 3-4 for the approach. The plant model used to evaluate the DG AOT (completion time) in Appendix D can be used for this evaluation with no further changes, therefore the detailed discussion for Steps 3-4 provided in Sections 3 and 4 of Appendix D will not be repeated here.

5. Step 5: Identify the Risk Measures

The risk measures that need to be assessed are the same as those identified and discussed in Section 5 of Appendix D. The measures are:

- Change in CDF
- ICCDP

6. Step 6: Quantify the PRA Model (utility action)

Quantification of the PRA model is not required for this evaluation. The impact of this AOT change on the risk measures can be determined from the conditional core damage frequencies calculated in Section 6 of Appendix D.

To evaluate this Tech Spec change, the following key assumptions will be applied:

- It will be assumed that 72 hours is the total time one DG is allowed be inoperable. This is consistent with the current Tech Specs. A 7 day completion time is being considered in Appendix D and a similar set of calculations should be performed based on this also.

- With the current completion time for this action of 24 hours, it should be assumed that the probability of the operable DG(s) failing is equal to the appropriate common cause failure factor up to 24 hours at which time a shutdown would be required if the required action was not completed. If this action is not met, the plant is required to go to mode 3 within 6 hours. Assuming that the action was successfully addressed in 24 hours, then the plant can continue to remain at power up to 72 hours total time. The probability of the operable DG(s) failing during the 24 hour to 72 hour time period is the random failure probability of the DG(s).

- With the extended completion time of 72 hours, it should be assumed that the probability of the operable DG(s) failing is the appropriate common cause failure factor up to 72 hours at which time a shutdown would be required if the action was not completed. If this action is not met, the plant is required to go to mode 3 within 6 hours. Currently, 72 hours is also the time one DG is allowed to be out of service, so a shutdown will also be required for this limit.

- This action and use of the common cause factor as the failure rate for the operable DG(s) is only applicable when the LCO is entered due to DG failures (repair activities) and not for routine maintenance or test activities.

Impact on CDF

As noted above, this AOT change only needs to consider repair activities and specifically only those repair activities that require more than 24 hours to complete. Repair activities that require less than 24 hours do not need to be considered in this evaluation since with the current and extended AOT common cause failure of the operable DG(s) is assumed (not ruled out) for 24 hours. For repair activities that require greater than 24 hours, with the current AOT the common cause failure of the operable DG(s) is assumed for the first 24 hours and random failure of the operable DG(s) is assumed for any time past 24 hours up to 72 hours. With the extended AOT, the common cause failure of the operable DG(s) is assumed for the total 72 hour time period.

The following are the steps required to determine the impact on CDF:

Calculation Step 1: Determine Mean Time to Repair

The mean time to repair needs to be calculated for the repair activities that extend past 24 hours. This calculation only includes those repair activities that require greater than 24 hours. Repair activities that require less than 24 hours can be eliminated. MTTR is calculated by:

$$MTTR = (RT_1 + RT_2 + RT_3 + \ldots + RT_n)/n$$

where:

RT = repair time

n = number of repair activities with minimum duration greater than 24 hours

Calculation Step 2: Determine the Repair Frequency

The frequency of the repair activities with durations greater that 24 hours needs to be determined consistent with the MTTR calculation. This frequency should be determined on a yearly basis and is calculated by:

$$RPF = n/T$$

where:

RPF = repair frequency

n = number of repair activities with minimum duration greater than 24 hours

T = time interval that corresponds to n

Calculation Step 3: Determine Impact on CDF

This calculation requires using the CCDF values calculated in Section 6 of Appendix D, dividing the MTTR into 0 - 24 hour and 24 - 72 hour intervals. The calculation to determine the impact on CDF follows.

$$CDP(24\text{ hr AOT}) = (24\text{ hr} \times CCDF(CCF) + (MTTR - 24)\text{ hr} \times CCDF(RF)) \times 1\text{ yr}/8760\text{ hr}$$

$$CDP(72\text{ hr AOT}) = MTTR \times CCDF(CCF) \times 1\text{ yr}/8760\text{ hr}$$

$$\Delta CDF = (CDP(72\text{ hr AOT}) - CDP(24\text{ hr AOT})) \times RPF$$

It is recommended that this calculation be repeated for a DG AOT of 7 days for Required Action B.4. This is the AOT extension examined in Appendix D. If it was determined in Appendix D that extending the Action B.4 AOT from 72 hours to 7 days will not impact the duration of repair activities, then the above calculations are also applicable to the 7 day AOT. But if it was determined the extending the AOT will impact the duration of repair activities, then the calculation will need to be repeated using the longer repair times to determine the MTTR for repair activities with durations greater than 24 hours and the frequency of these activities. The calculation to determine the impact on CDF is identical to that described above, but with a MTTR value that corresponds to a DG AOT of 7 days for Action B.4.

Incremental Conditional Core Damage Probability

The ICCDP is calculated as follows:

- ICCDP = [(CCDF with the subject equipment out of service) - (baseline CDF with nominal expected equipment unavailabilities)] x (duration of single AOT under consideration)

The CCDF corresponds to the situation in which the available DG(s) can fail due to common cause issues and the failure probability of the operable DG(s) that should be used is the common cause factor. This would be a Beta factor for the second DG of a two train system. The "duration of single AOT under consideration" is 72 hours.

This calculation does not need to be repeated for a DG AOT of 7 days for Required Action B.4 which is being examined in Appendix D. In either case, the values in the above calculation are the same.

7. Step 7: Preliminary Results Collection and Discussion

Utilities are required to provide the following information to Westinghouse to organize, review, and present to the RBTWG for discussion and assessment. This should be provided on Table E-1 and with supplemental sheets as appropriate.

- MTTR for repair activities greater than 24 hours in duration
- Repair frequency for repair activities greater than 24 hours in duration
- CDF increase
- ICCDP (for the 3 day AOT with one DG out of service due to corrective/repair maintenance activities)

The following values should also be provided for a DG AOT of 7 days if they differ from the above values:

- $MTTR_1$ for repair activities greater than 24 hours in duration corresponding to a DG AOT of 7 days
- Repair Frequency for repair activities greater than 24 hours in duration
- CDF increase

where:

$$\Delta CDF = (CDP(72\text{ hr AOT}) - CDP(24\text{ hr AOT})) \times RPF$$

$$CDP(24\text{ hr AOT}) = (24\text{ hr} \times CCDF(CCF) + (MTTR_1 - 24)\text{ hr} \times CCDF(RF)) \times 1\text{ yr}/8760\text{ hr}$$

$$CDP(72\text{ hr AOT}) = (72\text{ hr} \times CCDF(CCF) + (MTTR_1 - 72)\text{ hr} \times CCDF(RF)) \times 1\text{ yr}/8760\text{ hr}$$

8. Step 8: Final Result Collection and Review

The utilities are not required to provide any information or perform any calculations at this time to support this step.

9. Step 9: Identify Change Requests

The utilities are not required to provide any information or perform any calculations at this time to support this step.

10. Step 10: Documentation

The utilities are not required to provide any information or perform any calculations at this time to support this step.

Table E-1 Data Collection Form (LCO 3.8.1, Action B.3.1 and B.3.2 - CCF or Perform SR)	
Plant Name:	
Required Information	**Parameter**
For a DG AOT of 3 days • MTTR for repair activities greater than 24 hours in duration • Repair frequency for repair activities greater than 24 hours in duration • CDF increase • ICCDP (for the 3 day AOT with one DG out of service due to corrective/repair activities	
For a DG AOT of 7 days (if different from an AOT of 3 days) • MTTR for repair activities greater than 24 hours in duration • Repair frequency for repair activities greater than 24 hours in duration • CDF increase	

APPENDIX F

SPECIFIC ANALYSIS REQUIREMENTS FOR EVALUATING CHANGES TO TECHNICAL SPECIFICATION COMPLETION TIME:

LCO 3.8.9, ELECTRICAL POWER SYSTEMS, DISTRIBUTION SYSTEMS – OPERATING CONDITION B, ONE AC VITAL BUS INOPERABLE REQUIRED ACTION B.1, RESTORE AC VITAL BUS SUBSYSTEM TO OPERABLE STATUS

Evaluate increasing the completion time from 2 hours to 24 hours

1. Step 1: Identify the Technical Specification AOT Improvement

Required Action B.1 Restore AC vital bus subsystem to operable status with a completion time (allowed outage time/AOT) of 2 hours

Evaluate extending the completion time to 24 hours

Background information: The 120 VAC vital buses are typically arranged in two load groups per train and are normally powered from inverters. The inverters are supplied power from the Class 1E 125 VDC system. The alternate power supply for the vital buses are the Class 1E constant voltage source transformers powered from the same train as the associated inverter. Each constant voltage source transformer is powered from a Class 1E AC bus. If an inverter is inoperable or is to be removed from service, the vital AC bus can be supplied power from this backup supply. Typical AC vital buses are shown on the following table:

Typical Vital AC Electrical Distribution System			
Bus Type	**Voltage**	**Train A**	**Train B**
AC vital buses	120 V	Bus NN01 Bus NN03	Bus NN02 Bus NN04

Condition B of this Tech Spec represents one AC vital bus without power. With one AC vital bus inoperable, the remaining operable AC vital buses are capable of supporting the minimum safety functions necessary to shutdown the unit and maintain it in a safe shutdown condition. The inoperable bus must be restored to operable status by powering the bus from the associated inverter via inverted DC, inverter using internal AC source, or Class 1E constant voltage transformer, as applicable to the unit.

Typical loads on the AC vital buses are:

- SSPS channels
- NIS instrumentation and control power

- ESFAS slave relays
- ESFAS master relays
- Process rack protection sets
- Transmitter power supplies

Each vital bus does not carry the same loads, therefore, the risk importance of each bus may differ.

2. Step 2: Determine the Impact on Plant Safety

Both probabilistic and deterministic impacts need to be considered. At this point, only the probabilistic impact will be considered. The AOT extension will allow a vital AC bus to be unavailable for additional time while the plant is at-power. It needs to be determined how this additional unavailability will impact plant safety and operation. The following questions are considered to identify the impact.

<u>What event(s) are the AC vital buses used to mitigate?</u>

The vital AC buses are essential to the automatic actuation of safety systems by the SSPS, therefore, it is essential to the mitigation of all events. In addition, it provides power to other components that need to be identified on a plant specific basis.

<u>What event(s) can be caused by the unavailability or failure of the AC vital buses?</u>

These buses supply power to the instrumentation protection systems. Loss of single or multiple buses can lead to reactor trip or actuation of safety systems, due to the fail safe design of the system, and then require actuation of systems to mitigate the event for which power may now not be available. For example, at some plants failure of two vital AC buses can lead to a reactor trip and which will require actuation of the auxiliary feedwater system for decay heat removal. Automatic feedwater actuation will not be available if the failed vital AC buses are those that supply power to the slave relays used to actuate the auxiliary feedwater pumps. Events that can be initiated by failures of the vital AC power system need to be identified on a plant specific basis.

<u>What event(s) can be caused by inadvertent actuation of the AC vital buses?</u>

These buses are normally energized, therefore, this is not applicable.

<u>What backup systems, safety grade or non-safety grade, are available?</u>

There are no specific backup systems to the AC vital buses. There is redundancy built into the design which enables one vital bus to be inoperable while the remaining operable AC vital buses are capable of supporting the minimum safety functions necessary to shutdown the unit. In addition, each vital AC bus can be powered from one of two sources; either an inverter from a Class 1E DC bus or a transformer from a Class 1E AC bus.

3. Step 3: Identify the Impact on the Plant PRA Model

The following discusses the vital AC power modeling requirements in the at-power PRA. Utilities are required to ensure their at-power PRA model is consistent with the following in Step 4 of this process. If necessary, shutdown risk will be addressed at a later time on a generic basis since many utilities do not currently have the capability to quantify a plant specific, shutdown PRA model.

Since each vital bus does not carry identical electrical loads, some of the following calculations will need to be completed using the bus with the high risk importance as noted in the following.

<u>120 VAC vital power unavailability model</u>

The vital AC power system is a normally energized system. A model of it includes the components in the circuits supplying power to the buses. Sources of power to the vital buses are from the Class 1E 125 VDC buses via inverters and from the Class 1E 480 VAC buses via regulated transformers. Failure of a component in one of the circuits from the power source to the vital AC bus will fail a source of power to an AC bus, but will not cause loss of bus power. Both sources, or circuits from the sources, must fail for a loss of bus power.

The following discusses the modeling requirements of the 120 VAC vital AC system necessary to evaluate this AOT change.

- The 120 VAC vital power unavailability model should include components that can cause failure of power to the 120 VAC buses from both sources. This includes transformers, circuit breakers, fuses, and inverters as appropriate. Credit should be taken for both sources of power to the buses and operator actions required to energized a bus from its alternate power source needs to be included in the model if applicable. It should also include any test activities and maintenance activities that can cause the buses to be unavailable and common cause failures that can cause multiple bus failures. The maintenance activities should include preventive (routine) and corrective (or repair) activities. In addition, required support systems need to be included. This may include room cooling or operator actions to provide alternate room cooling given the primary means of room cooling fails.

- If required for station blackout events, only the source of power from the batteries through the inverters should be credited.

- Component random failure probabilities can be either generic values or plant specific values. The mission time should be set at 24 hours unless alternate missions times are factored into the PRA model based on the specific event. If the mission time used is event specific in a particular PRA model, then this should be continued to be used. In addition, the component reliability can be impacted by the AOT extension; the additional time to complete maintenance activities can improve the component's performance. This is discussed further in Step 4.

- Common cause failure: Common cause failure of multiple vital AC buses needs to be included in the model.

- Pre-initiator human error events: Pre-initiator human error events are not credible since this would cause an AC vital bus to be inoperable which would be detected in a short timeframe.

- Test activities and maintenance activities: AC vital bus unavailability due to both test and maintenance activities needs to be included in the model. This should include unavailability of any buses, circuit breakers, inverters, fuses, and transformers used in the power supply circuit to the vital buses. This is typically done with basic events for each activity under the vital bus unavailable event or at the component level for the components of interest. It is necessary to include these basic events in the PRA model since the impact of the AOT change primarily affects component unavailability due to test and maintenance activities. Step 4 discusses the approach for determining the test and maintenance unavailability values for the current and extended AOTs.

- Support systems: The vital buses may require room cooling to function. Some PRA models provided room temperature calculations to demonstrate that room cooling is not required or demonstrate that by opening the room doors sufficient room cooling is provided. Room cooling needs to be included or the reason stated why it is not.

- Initiating event: Loss of 120 VAC vital buses as an initiating event needs to be included by those plants where applicable. Again, the IE frequency model should credit both sources of power to the buses including the corresponding component failures and required operator actions for switching to the alternate power source. Unavailability of the buses due to test and maintenance activities should also be included. For failure of a single vital bus as an initiator, the appropriate time period to consider is 8760 hours (1 year). For failure of two buses as an initiator, the appropriate time period for failure of the first bus is 8760 hours. The second bus needs to fail within the time period in which the first bus is allowed to remain inoperable. This time period is set by the Technical Specification AOT for a single AC vital bus inoperable. Currently, with standard Tech Specs, this value is 2 hours. For the case with the extended AOT, the value is 24 hours.

4. Step 4: Modify the PRA Model and AOT Related Parameters (utility action)

Utilities are required to modify their plant PRA to reflect the requirements provided in Step 3. This includes changes to the vital AC power modeling and loss of vital power as an initiator.

<u>Plant response tree modeling and system unavailability modeling</u>

There is no impact from this change on event tree models, so no changes to event trees are expected. Some utilities will need to modify their fault tree models to be able to evaluate this AOT change. Vital AC power is not always modeled as a separate system, but is sometimes modeled with the system(s) it is supporting. Either approach is acceptable provided that the

impact of the AOT change on test and maintenance unavailabilities can be modeled and vital AC power is included in the model where it is required to support component operation.

Initiating event modeling

The fault trees used to determine the initiating event frequency for loss of vital AC power will need to be modified as discussed in Step 3.

Component reliability

As noted in Step 3, the component reliability can be impacted by the AOT extension. The additional time to complete maintenance activities can improve the component's performance. This can be due to improve maintenance activities or additional time to reassemble and realign the component within its system. Typically the impact on component reliability is not easily determined. For this study, it will be conservatively assumed that the reliability of the vital bus and associated components is not impacted by the AOT extension.

Test and maintenance unavailabilities

The most critical part of the analysis is determining how the extended AOT will impact the availability of vital AC power. This represents the primary change to the PRA for this evaluation. The AOT will impact the unavailability of the vital AC power due to maintenance activities (corrective and preventive) and test activities. A longer AOT will allow the utility to:

- perform additional test activities at-power,
- perform additional preventive maintenance activities at-power, and
- complete repair activities in a more relaxed atmosphere (i.e., taking more time).

The impact of any additional activities and additional time to complete current activities on the vital AC power system unavailability needs to be assessed. It is recommended that realistic test and maintenance times with the extended AOT be used instead of assuming that the full AOT will always be used. This is consistent with Regulatory Guide 1.177. It is not prudent to conservatively assume that the full AOT time will be used with all test and maintenance activities and such an assumption can lead to unacceptably conservative results.

To develop realistic test and maintenance downtimes, utility personnel will need to identify how the longer AOTs will be used. With the extended AOTs will additional test activities or routine maintenance activities now be done at power or will corrective actions now take longer since round-the-clock repair efforts may be delayed? Will activities typically performed during shutdown now be completed while the plant is at-power? Consideration needs to be given to:

- Test activities,
- Routine or scheduled maintenance activities, and
- Repair, corrective, or unscheduled maintenance activities.

It is expected that no test activities, that cause components for the vital AC power supply to be unavailable, are done on these components while the plant is at power. If so, then there is no impact of this AOT increase on bus unavailability caused by test activities. But, if test activities are done at-power, the test times may not change with extended AOTs if these activities generally do not extend across work shifts. Similarly, if routine maintenance activities are done at-power, the test times may not change with extended AOTs if these activities generally do not extend across work shifts. It is expected that routine activities will not be done with no power to the bus, the alternate source will be supplying power, therefore, this AOT would not be applicable.

Consideration also needs to be given to the plant policy regarding the use of AOTs. Will the plant target time to repair a system while in an LCO action statement remain at its current value or increase with the increased AOT? Some plants may have a policy that all repairs will be completed within 50% of the AOT before requiring the use of shift work or overtime to complete the repair. With an AOT increasing from 2 hours to 24 hours, the target time could increase significantly. If the plant policy will change, then the historical mean test and repair times associated with the 2 hour AOT may need to be increased by the ratio of the plant policy times.

The impact of the extended AOT on test and maintenance times is a plant specific assessment that needs to be completed by the utility. The attached tables are provided to help with this assessment. Tables F-1 and F-2 are worksheets that provide an approach to determine the impact of the AOT increase on vital AC bus unavailability due to test and maintenance activities. The approach considers current test and maintenance activities, and the potential impact of the increased AOT on their corresponding test and repair times, and also new test and maintenance activities that may be considered with the extended AOTs. This approach requires that the frequencies and durations of the test and routine maintenance activities be known from past plant operation. Utility personnel then need to judge the impact of the extended AOT on these historical or estimated values.

For repair (or unscheduled) activities, the frequency is expected to remain the same with the extended AOT, but the time to complete the repair may be increased. Again, it is a utility judgment to determine the impact on the repair time.

Several approaches are possible for estimating the impact of the extended AOT:

- increase the maintenance time by the ratio of AOT times: 12 (24 hours/2 hours)
- re-analyze the plant specific vital AC bus maintenance activity data to determine the impact of the AOT extension on each activity (short repair times may not be impacted) and then calculate a new repair time
- assumed that all maintenance activities will require the full AOT (this assumption is not recommended for reasons previously discussed).

The plant policy on completing repairs in a certain amount of the AOT also needs to be considered. The approach selected is up to the utility and should be noted on the corresponding table.

These tables will be used to document the impact of the extended AOT on the test and maintenance times. They also provide a concise listing of possible activities for which the extended AOT will be used. The later information is important to the justification for the AOT extension request.

5. Step 5: Identify the Risk Measures

The risk measures that need to be assessed are based on Regulatory Guide 1.177. Section 2.3 of this Regulatory Guide discusses a three-tiered approach for evaluating the risk associated with proposed Tech Spec AOT changes. The tiers are defined as:

- Tier 1: PRA Capability and Insights
- Tier 2: Avoidance of Risk-Significant Plant Configurations
- Tier 3: Risk-Informed Configuration Risk Management

In Tier 1 the impact of the AOT change on core damage frequency (CDF), incremental conditional core damage probability (ICCDP), large early release frequency (LERF), and incremental condition large early release probability (ICLERP) needs to be determined. The large early release related measures only need to be considered for AOTs related to systems that can impact releases from containment. For the vital AC bus AOT changes, the LERF measures are not necessary, only CDF and ICCDP are required. ICCDP is defined as:

- ICCDP = [(conditional CDF with the subject equipment out of service) - (baseline CDF with nominal expected equipment unavailabilities)] x (duration of single AOT under consideration)

Tier 2 requires that the licensee provide reasonable assurance that risk-significant plant equipment outage configurations will not occur when specific plant equipment is out of service consistent with the proposed Tech Spec. Tier 3 requires that the licensee develop a program that ensures that the risk impact of out-of-service equipment is appropriately evaluated prior to performing any maintenance activity. Neither Tier 2 or Tier 3 requirements will be part of this WOG WCAP submittal, but will be part of the licensee's LAR request.

6. Step 6: Quantify the PRA Model (utility action)

Each utility is required to quantify their PRA model to determine the impact on the risk measures identified in Step 5. The calculations that need to be done follow:

1. Impact on CDF: The impact of the AOT changes on CDF requires two quantifications of the PRA model. The first is a base case quantification calculating CDF with test and maintenance parameters corresponding to current AOTs. The second quantification provides CDF that corresponds to the increased AOT. For this case it is necessary to

change the vital AC bus unavailability due to test and maintenance activities. From these cases the impact on CDF will be determined.

2. Calculation of ICCDP: Analyses will also be required to determine ICCDP for a vital AC bus AOT of 24 hours. This is calculated by setting the subject equipment to an out-of-service state and re-quantifying the PRA model. This needs to be done for the vital AC power bus fault trees used for supporting other systems and also in the IE frequency calculation. In the IE frequency calculation which requires failure of two buses to cause the event, one bus should be assumed to be inoperable and the second bus then needs to fail within the 24 hour AOT. This provides the conditional core damage frequency (CCDF). Then the ICCDP is calculated as defined in Step 5. If the vital AC buses are not of equal importance to plant risk, then it is recommended that the most limiting case be used, that is, the bus with the highest risk importance.

   The CCDF and ICCDP need to be calculated for two situations. The first situation is when one vital AC bus is unavailable for testing or routine maintenance and the second is when one bus is unavailable for repair. For the test or routine maintenance situation, the available vital buses will fail randomly and the corresponding random failure probabilities for the bus and associated components should be used. In the repair situation there is no information indicating that the available vital buses will not fail for the same reason the inoperable bus failed (a common cause failure). In this case, the available buses and associated components can fail due to common cause issues and the failure probabilities for the operable buses and associated components that should be used is the common cause factor. For this calculation it is recommended that the component(s) that be set to the common cause factor is that (are those) which are the dominant contributor to failure of power to the bus. The factor used would be a Beta factor for the second component of a two train system.

3. Cumulative impact: At this point the cumulative impact of the AOTs on CDF is not necessary.

4. Risk benefits: The risk associated with operational alternatives, or the risk averted, can be used to trade off against the additional risk of remaining at power with the extended AOT. The operational alternative to remaining at power for additional time is to shut the plant down with the component of interest out of service, repair the component of interest in a shutdown state, and restart the plant. Plant specific calculations will not be required for this step. If necessary, generic calculations performed by Westinghouse will be used.

5. Tier 2 restrictions: At this point in the analysis it may be advantageous for each utility to do the necessary calculations to establish the Tier 2 restrictions. The results of this analysis are not to be submitted to Westinghouse as part of the evaluation. As previously noted, Tier 2 evaluations will be done on a plant specific basis and will not be part of the WOG WCAP submittal. Tier 2 requirements will be part of the individual utility LAR submittals. Information on determining Tier 2 requirements is provided in document titled "General Process for Evaluating the Safety Impact of Changes to Technical Specification Allowed Outage Times" previously provided to all WOG RBTWG members.

6. Sensitivity and uncertainty analyses: No sensitivity or uncertainty analyses have been identified at this time.

7. Step 7: Preliminary Results Collection and Discussion

Utilities are required to provide the following information to Westinghouse to organize, review, and present to the RBTWG for discussion and assessment. This should be provided on Table F-3 with supplemental sheets as appropriate.

- Dominant cutsets leading to failure of power to a 120 VAC vital bus including cutset probabilities and failure probabilities of the elements in the cutsets
- 120 VAC vital power common cause model
- Mission (run) time
- Loss of vital bus IE frequency and description of event (loss of one bus, two buses, etc?)
- CDF (current AOT), i.e., base value
- CDF (proposed AOT)
- CDF increase; (CDF (proposed AOT) – CDF (current AOT))
- CCDF (with one vital bus out of service due to test or scheduled maintenance activities)
- CCDF (with one vital bus out of service due to corrective/repair maintenance activities)
- ICCDP (for the 24 hour AOT with one vital bus out of service due to test or routine maintenance activities)
- ICCDP (for the 24 hour AOT with one vital bus out of service due to corrective/repair maintenance activities)
- Justification for the 120 VAC vital bus used in the CCDF calculations (highest risk importance bus?)
- Tables F-1 and F-2 defining how the AOT extension impacts the test and maintenance unavailabilities
- A brief description or diagram of the 120 VAC vital bus/power system (power to the vital buses)
- List of loads on the 120 VAC vital buses

- A brief statement on how room cooling is addressed
- Changes made to the PRA model since the model submitted to the NRC to meet the IPE requirement (if not previously provided)

8. Step 8: Final Result Collection and Review

The utilities are not required to provide any information or perform any calculations at this time to support this step.

9. Step 9: Identify Change Requests

The utilities are not required to provide any information or perform any calculations at this time to support this step.

10. Step 10: Documentation

The utilities are not required to provide any information or perform any calculations at this time to support this step.

Table F-1 Worksheet for Determining the Impact of Increased AOTs on Mean Test Downtimes (LCO 3.8.9, Action B.1 - One AC Vital Bus)

Plant Name:

Test Activity	Current (C) or New (N) Activity	Test Frequency	With Current AOT		Impact of AOT Change on Test Downtime[2]	With Extended AOT[3]	
			Downtime per Test Activity (hr)	Test Activity Unavail.[1]		Downtime per Test Activity (hr)	Test Activity Unavail.[1]
Total	---	---	---		---	---	

Method used to determine test time with extended AOT:

Notes:

1. Test Activity Unavailability = Test Frequency x Downtime per Test Activity
2. Note above the method(s) used for determining the repair and maintenance times with the extended AOT. If a factor increase is used (such as 2X), add the factor to this column.
3. Downtime per Test Activity (with extended AOT) = Impact of AOT Change on Test Downtime x Downtime per Test Activity (with current AOT)

Table F-2 Worksheet for Determining the Impact of Increased AOTs on Mean Maintenance Downtimes (LCO 3.8.9, Action B.1 - One AC Vital Bus)

Plant Name:

Maintenance Activity (Note as either Scheduled (S) or Repair (R))	Current (C) or New (N) Activity	Maintenance Frequency	With Current AOT		Impact of AOT Change on Maint. Downtime[2]	With Extended AOT[3]	
			Downtime per Maint. Activity (hr)	Maint. Activity Unavail.[1]		Downtime per Maint. Activity (hr)	Maint. Activity Unavail.[1]
Total	---	---	---		---	---	

Method used to determine repair time with extended AOT:

Method used to determine scheduled maintenance time with extended AOT:

Notes:

1. Maintenance Activity Unavailability = Maintenance Frequency x Downtime per Maintenance Activity
2. Note above the method(s) used for determining the repair and maintenance times with the extended AOT. If a factor increase is used (such as 2X), add the factor to this column.
3. Downtime per Maintenance Activity (with extended AOT) = Impact of AOT Change on Maintenance Downtime x Downtime per Maintenance Activity (with current AOT).

Table F-3 Data Collection Form (LCO 3.8.9, Action B.1 - One AC Vital Bus)	
Plant Name:	
Required Information	**Parameter**
Mission (run) time in hours	
Common cause failure model	
Common cause failure factor for failure of multiple buses (Beta for the Multiple Greek Letter approach for failure of 2 of 2 buses, etc.)	
Loss of vital bus IE frequency and description of event (loss of one bus, two buses, etc.); if not an initiator, state so	
CDF (current AOT)	
CDF (proposed AOT)	
CDF increase	
CCDF (with one vital AC bus out of service due to test or scheduled maintenance activity)	
CCDF (with one vital AC bus out of service due to corrective/repair maintenance activity)	
ICCDP (for the 24 hour AOT with one vital AC bus out of service due to test or scheduled maintenance activity)	
ICCDP (for the 24 hour AOT with one vital AC bus out of service due to corrective/repair maintenance activity)	
Supply additional sheets to respond to the following: • Tables F-1 and F-2 defining how the AOT extension impacts the test and maintenance unavailabilities. • Dominant cutlets leading to failure of power to a vital 120 VAC bus including cutest probabilities and failure probabilities of the elements in the cutlets • Justification for the vital 120 VAC bus used in the CCDF calculations (highest risk importance bus?)	

Table F-3 (cont.) Data Collection Form (LCO 3.8.9, Action B.1 - One AC Vital Bus)
• A brief description or diagram of the 120 VAC vital bus/power system (power to vital buses). • List of loads on the 120 VAC vital buses. • A brief statement on the modeling location of test and maintenance unavailability (at the Class 1E 4.16 kV AC ESF bus level or done at the various bus levels. • A brief statement on how room cooling is addressed. • Changes made to the PRA model since the model submitted to the NRC to meet the IPE requirement (if not already provided).