Dominion℠

North Anna Power Station
Unit 2
Inservice Inspection Program
Third Inspection Interval
Inservice Inspection Plan

December 14, 2001 through December 13, 2010

INSERVICE INSPECTION/TESTING CHANGE/UPDATE REQUEST FORM

DOCUMENT TITLE: Inservice Inspection Program for Component and Component Supports for the Third Inspection Interval

STATION: North Anna Power Station UNIT(S): 2

CHANGE/UPDATE REQUESTED: Initial Approval of Program

REFERENCES: None

REASON FOR CHANGE/UPDATE: Programmatic Update of ISI Program as Required by 10 CFR 50.55a

CHANGE/UPDATE REQUESTED BY: Ernest Throckmorton EWT DATE: 06/05/01

CHANGE/UPDATE REVIEWED BY: _____ DATE: 5 June 01

DEPARTMENT: Materials/ISI Engineering

CORPORATE SUPERVISOR – MATERIALS/ISI ENGINEERING
REVIEWED AND APPROVED: _____ DATE: 6/5/01

SNSOC APPROVAL REQUIRED: [X] YES [ ] NO

SITE SUPERVISOR – TESTING AND INSPECTION
REVIEWED AND APPROVED: _____ DATE: 6-7-01

STATION NUCLEAR SAFETY AND OPERATING COMMITTEE (SNSOC)
REVIEWED AND APPROVED: _____ DATE: 6/7/01

ANII REVIEW REQUIRED: [ ] YES [X] NO
ANII REVIEW: (Review not required prior to submittal to NRC) DATE: _____

IST PRE-SNSOC ROUTING SLIP

NORTH ANNA POWER STATION, UNIT 2,
INSERVICE INSPECTION PROGRAM,
THIRD INSPECTION INTERVAL

Approval

D. H. Smith

5/25/01
L. L. Spain

5/31/2001
J. A. Price

5.30.01
D. A. Sommers

5/31/01
S. P. Sarver

VIRGINIA ELECTRIC AND POWER COMPANY

(DOMINION)

NORTH ANNA POWER STATION UNIT 2

INSERVICE INSPECTION PLAN FOR

COMPONENTS AND COMPONENT SUPPORTS

FOR THE

THE THIRD INSPECTION INTERVAL

DECEMBER 14, 2001 – DECEMBER 13, 2010

REVISION 0 - JUNE 2001

VIRGINIA ELECTRIC AND POWER COMPANY
(DOMINION)
NORTH ANNA POWER STATION UNIT 2
INSERVICE INSPECTION PLAN
THIRD INSPECTION INTERVAL
DISTRIBUTION RECORD

DISTRIBUTION NO.	DATE ENTERED	INITIAL	DISTRIBUTION NO.	DATE ENTERED	INITIAL
1	___	___	21	___	___
2	___	___	22	___	___
3	___	___	23	___	___
4	___	___	24	___	___
5	___	___	25	___	___
6	___	___	26	___	___
7	___	___	27	___	___
8	___	___	28	___	___
9	___	___	29	___	___
10	___	___	30	___	___
11	___	___	31	___	___
12	___	___	32	___	___
13	___	___	33	___	___
14	___	___	34	___	___
15	___	___	35	___	___
16	___	___	36	___	___
17	___	___	37	___	___
18	___	___	38	___	___
19	___	___	39	___	___
20	___	___	40	___	___

Future distributions to this ISI Plan will be accompanied by two copies of the distribution memo, one of which is to be returned per instructions thereon, and the other one is to be filed sequentially behind this page giving you a record of the contents of each distribution.

TABLE OF CONTENTS

	TITLE PAGE	
	Distribution Record	
	Table of Contents	
	Abstract	1
	SECTION	
1	Inservice Inspection Plan - General	3
2	Inservice Inspection Plan - Components and Component Supports	19

ABSTRACT
VIRGINIA ELECTRIC AND POWER COMPANY
(DOMINION)
NORTH ANNA POWER STATION UNIT 2
INSERVICE INSPECTION PLAN
THIRD INSPECTION INTERVAL
DECEMBER 14, 2001 THROUGH DECEMBER 13, 2010

In accordance with 10CFR50.55a dated September 22, 1999, the North Anna Power Station, Unit 2 (NAPS 2), Inservice Inspection Plan for the Third Inspection Interval has been prepared to meet the requirements of American Society of Mechanical Engineers (ASME), Boiler and Pressure Vessel Code (BPV), Section XI, Rules For Inservice Inspection of Nuclear Power Plant Components (Section XI), 1995 Edition up to and including the 1996 Addenda (95-96) (the Code). This updated program is scheduled to commence December 14, 2001 and to be completed December 13, 2010. The program is scheduled for only nine years as opposed to the normal ten years to allow the program to return to its original pattern of intervals based on operational date, as allowed by Section XI, paragraph IWA-2430(c)(1). In cases where the requirements of Section XI have been determined to be impractical, requests for relief have been developed per 10CFR50.55a(g)(5)(iii). If an alternative to the requirements of Section XI has been proposed, than the proposed alternative has been developed as allowed by 10CFR50.55a(a)(3).

One alternative previously submitted in accordance with 10CFR50.55a(a)(3) has significant impact on the overall basis and implementation of the program. It proposes to base the selection, examination method, and extent and frequency of examination of Class 1 "Pressure Retaining Welds In Piping" (Examination Category B-J) and Class 1 "Pressure Retaining Dissimilar Metal Welds In Vessel Nozzles" (Examination Category B-F) on the risk informed technology documented in "Westinghouse Owner's Group Application of Risk Informed Method to Piping Inservice Inspection Topical Report," WCAP-14572, Revision 1-NP-A, and Code Case N-577-1, "Risk-Informed Requirements for Class 1, 2, or 3, Piping, Method A". This alternative was submitted to the Nuclear Regulatory Commission independently of this document on April 26, 2001, by letter, serial number 01-234.

This inservice inspection (ISI) program is divided into three documents, the "Inservice Inspection Plan for Components and Component Supports"(ISI Plan), the "Inservice Inspection Program Plan for Pumps and Valves" and the "Containment Inservice Inspection Program." The Inservice Inspection Program Plan for Pumps and Valves is being submitted separately from the ISI Plan. The ISI Plan does not include requirements applicable to Section XI Subsections IWE, "Requirements For Class MC Components Of Light Water Cooled Power Plants;" and IWL, "Requirements For Class CC Concrete Components of Light-Water Cooled Power Plants." Federal Regulations were changed on September 9, 1996 to require the inclusion of these sections in ISI programs. Developing specific ISI Plans to address these two subsections of Section XI and their inspection interval achieved compliance with the rule of September 9, 1996. This document, the ISI Plan, provides an overview and summary of the NAPS 2 ISI Plan for Subsections IWA, IWB, IWC, IWD, and IWF. Therefore, the ISI Plan is applicable to the

components (including supports) which are classified as ASME Code Class 1, Class 2, and Class 3. The boundaries of the ISI Plan, component classifications, and the employment of exemptions in IWB-1220, IWC-1220, IWD-1220, and IWF-1230 are shown on the ISI "Classification Boundary Drawings" (CBM's) listed on pages 13 through 15. The coding, symbols and text used on the CBM's are detailed on 12050-CBM-L&S-3, Legends and Symbols Drawing.

Section 1 of this document provides the general information and format regarding this program. Section 2 of this document provides a program implementation overview of the ISI Plan for ISI Class 1, 2, and 3 components and component supports. Also contained in Section 2 are the requests for relief associated with the third inspection interval ISI Plan. Associated with the ISI Plan is the "ISI Schedule", which details the examination category and item number for each component, the examination and test requirements, the examination methods; and provides the schedule for the examinations. The ISI Plan and the ISI Schedule, together, meet the documentation requirements of the Code for the NAPS 2 third inspection interval.

VIRGINIA ELECTRIC AND POWER COMPANY

(DOMINION)

NORTH ANNA POWER STATION

UNIT 2

INSERVICE INSPECTION PLAN

GENERAL

THIRD INSPECTION INTERVAL

SECTION 1

TABLE OF CONTENTS

SECTION	TITLE	PAGE
1.0	INSERVICE INSPECTION PLAN - GENERAL	5
1.1	GENERAL INFORMATION	5
	1.1.1 Preservice Examinations	5
	1.1.2 Initial Inservice Inspection Interval	5
	1.1.3 Second Inservice Inspection Interval	5
	1.1.4 Third Inservice Inspection Interval	5
	1.1.5 Inservice Inspection Plan Description	6
	1.1.5.1 Exclusion of IWE and IWL	7
	1.1.5.2 Exclusion of IWP and IWV	7
	1.1.5.3 Inspection Plan and Implementation Schedule	7
	1.1.5.4 Inspection Program Employed	8
	1.1.5.5 Classification of Components	8
	1.1.5.6 Components Exempt from Examination	9
	1.1.5.7 Requests for Relief	10
	1.1.5.8 ASME Section XI Code Cases Incorporate Into the ISI Plan	10
	1.1.5.9 Augmented Examinations	14
1.2	DRAWING LIST - ISI CLASSIFICATION BOUNDARY DRAWINGS	16

1.0 INSERVICE INSPECTION PLAN - GENERAL

1.1 GENERAL INFORMATION

North Anna Power Station Unit 2 (NAPS 2) is located on Lake Anna in Louisa County, Virginia. The plant employs a Pressurized Water Reactor (PWR) and associated Nuclear Steam Supply System components provided by Westinghouse Electric Corporation.

1.1.1 Preservice Examinations

Preservice examinations at NAPS 2 were performed utilizing the requirements of ASME Section XI, 1974 Edition with Addenda through Summer 1975.

1.1.2 Initial Inservice Inspection Interval

NAPS 2 commercial operation commenced on December 14, 1980. Accordingly, the initial ten year inspection interval was conducted from 12/14/80 to 12/14/90. Examinations during the first inspection interval were also performed per ASME Section XI, 1974 Edition with Addenda through Summer, 1975. Certain system pressure testing requirements were completed per ASME Section XI, 1977 Edition with Addenda through Summer, 1979.

1.1.3 Second Inservice Inspection Interval

As mandated by the Code of Federal Regulations, Title 10, Part 50, Article 50.55a (10CFR50.55a), the NAPS 2 second interval ISI Plan was updated to the 1986 Edition of ASME Section XI. This is the latest edition and addenda of Section XI incorporated into 10CFR50.55a as of December 14, 1989. The second ISI interval commenced on December 14, 1990 and was initially scheduled to end after December 13, 2000. However, by use of IWA- 2430(d), the interval was extended through December 13, 2001.

1.1.4 Third Inservice Inspection Interval

As mandated by the Code of Federal Regulations, Title 10, Part 50, Article 50.55a (10CFR50.55a), the NAPS 2 third interval ISI Plan was updated to the 1995 Edition of ASME Section XI including addenda up to and including the 1996 Addenda. This is the latest edition and addenda of Section XI incorporated into 10CFR50.55a and it is the edition and addenda of Section XI in

affect one year before the end of the NAPS 2 second inspection interval. It was incorporate into the regulation on September 22, 1999. The third inspection interval will begin on December 14, 2001 and will extend through December 13, 2010. The third inspection interval is scheduled for a period of nine years to allow the interval schedule to return to its original pattern. The implementation will be accomplish by reducing the lengths of the second and third inspection periods by approximately six months, as allowed by IWA-2430 (d)(3), to assure two inspection outages will be available in each inspection period. The dates for the inspection periods are scheduled as follows:

Period 1: December 14, 2001 through December 13, 2004,
Period 2: December 14, 2004 through June 13, 2008, and
Period 3: June 14, 2008 through December 13, 2010.

1.1.5 Inservice Inspection Plan Description

The ISI Plan contained herein addresses the ISI and testing of ISI Class 1, 2, and 3 components and the associated component supports. Applicable requirements in Subsections IWA, IWB, IWC, IWD, IWF and the Mandatory Appendices of the 1995 Edition of ASME Section XI with addenda up to and including the 1996 Addenda are/will be incorporated into our corporate and plant site ISI programs and procedures as necessary to implement the requirements. Any programmatic modifications to these requirements are discussed in this document.

This document is not intended to provide specific information on the implementation of the ISI Plan. The intent of this document is to provide specific information on the scope of the NAPS 2 ISI Plan (i.e., its boundary and compliance with Section XI), provide alternatives to the requirements of Section XI where appropriate, and identify those Section XI requirements which are deemed impractical. Requests for relief for these impractical requirements have been developed per 10CFR50.55a(g)(5)(iii). Alternatives have been proposed in accordance with 10CFR50.55a(3)(i) or (ii).

1.1.5.1 Exclusion of Subsections IWE and IWL

Subsection IWE, "Requirements For Class MC Components of Light-Water Cooled Power Plants," and IWL, "Requirements For Class CC Concrete Components of Light-Water Cooled Power Plants," have not been included in this program. The Final Rule for 10 CFR Part 50, Codes and Standards for Nuclear Power Plants, Subsection IWE and Subsection IWL, Federal Register, Volume 61, Number 154, August 8, 1996 allows licensees five years to implement the initial inspection period requirements. The programs to satisfy these requirements have been developed and are being implemented as required by the noted regulations. The implementation of these programs, including the NAPS 2 IWE and IWL programs, is being controlled by their own ISI Plans exclusive of this program. No submittal has been made of the programs as allowed by the regulations.

1.1.5.2 Exclusion of Subsections IWP and IWV

Subsections IWP and IWV, Inservice Testing of Pumps and Inservice Testing of Valves in Nuclear Power Plants are not included in this program. This program addressing the inservice testing of pumps and valves is being submitted separately.

1.1.5.3 Inspection Plan and Implementation Schedule

The inspection plan required by IWA-2420 (a) and the implementing schedule required by IWA-2420 (b) detail the requirements to be addressed by the overall ISI program for components and component supports. The ISI Plan and the ISI Schedule, together, provide the required information. Even though the ISI Schedule is a separate document from the documented identified as the ISI Plan, it part of the ISI Plan.

1.1.5.4 Inspection Program Employed

The ISI Plan for NAPS 2 will utilize the interval format of Inspection Program B, as shown in IWA-2432.

1.1.5.5 Classification of Components

A. Classification of Components-Design

NAPS 2 was issued construction permit No. CPPR-78 in February 1971. The station design incorporates the codes and standards that were in effect when the equipment was purchased. The codes and standards used for the design, fabrication, erection, and testing of safety related components are commensurate with the importance of the safety functions to be performed.

The group classifications tabulated in the "Standard Format and Content of Safety Analysis Reports for Nuclear Power Reactors", issued in February 1972, and in Safety Guide No. 26, published in March 1972, incorporated, in most cases, later editions of codes than those in effect when the majority of safety-related equipment was designed. Some of the equipment that would fall under a "group" as defined in Safety Guide No. 26 was designed to different codes or different editions of the same code. For example, for different components that would be in the same group, one may be designed to ASME III-1968, one to ASME III-1971, and one to ASME VIII-1968.

Therefore, pressure-containing components of safety-related systems do not necessarily fall under the group classification listed above.

B. Classification of Components-Inservice Inspection

The classification of components for ISI was performed by employing the guidance of 10 CFR 50.55a, USNRC Regulatory Guide 1.26, Revision 3. The specific A, B, C, and D level classification system set forth in the guide was not used. However, the requirements of the guide were followed in developing the list of structures, systems and components for which the program is applicable.

The ISI Classification of each component included in NAPS 2 ISI Plan is shown on the ISI Classification Boundary Drawings. The Legends and Symbols ISI Classification Boundary Drawing (12050-CBM-L& S-3) details the line codings and component markings which provide the ISI Classification of all items included within the ISI Plan boundaries. In general, the ISI classification of piping is accomplished by line "codings" or symbols shown on 12050-CBM-L&S-3. ISI Classification of components which graphically cannot be coded, such as pressure vessels, pumps, strainers, and tanks, is shown as text (e.g., ISI Class 1A, 2A or 3A) either inside the component graphics or adjacent to the component mark number.

Classification changes are typically shown at the seat of a valve, with the ISI Class shown on either side of the classification "break line".

1.1.5.6 Components Exempt from Examination

The application of the exemptions allowed per IWB-1220, IWC-1220, IWD-1220, and IWF-1230 is also detailed by the codings and component markings of 12050-CBM-L&S-3 discussed in section 1.1.5.5.B.

1.1.5.7 Requests For Relief

Where the requirements of ASME Section XI have been determined to be impractical, requests for relief have been developed in accordance with 10 CFR 50.55a(g)(5)(iii). The impractical requirements are detailed in three sets of relief requests: an NDE series for components and nondestructive examination areas, an SPT series for system pressure testing areas, and a CS series for component support areas. As the examinations of the interval are completed, because of its design, NAPS 2 will be unable to obtain essentially 100% of each required examination. Therefore, relief requests asking approval for partially completed examinations will be submitted.

Additionally, where alternatives to the requirements of Section XI are proposed, they will be developed in accordance with the requirements of 10CFR50.55a(3)(i) and/or (ii). These requests for approval to use alternative requirements will also be presented in the sets of relief requests described above.

1.1.5.8 ASME Section XI Code Cases Incorporated Into The ISI Plan

As allowed by 10 CFR 50.55a and/or USNRC Regulatory Guide 1.147, Revision 11, the following Code Cases are being incorporated into the NAPS 2 ISI Plan:

Case N-416-1 -	"Alternative Pressure Test Requirement for Welded Repairs or Installation of Replacement Items by Welding, Class 1, 2, and 3 Section XI, Division 1" (Approved with conditions by NRC as stated in Regulatory Guide 1.147,

	Rev. 12, May, 1999. The following condition is a requirement for use of CC N-416-1 and as such is part of the requirements of this ISI Plan: "*Code Case N-416-1 is acceptable subject to the following condition in addition to those conditions specified in the Code Case. Additional surface examinations should be performed on the root (pass) layer of butt and socket welds of pressure retaining boundary of Class 3 components when the surface examination method is used in accordance with Section III".)*
Case N-460 -	"Alternative Examination Coverage for Class 1 and Class 2 Welds"
Case N-481 -	"Alternative Examination Requirements for Cast Austenitic Pump Castings." (Required Technical Report is included as an attachment to this document in Appendix 1. The Technical Report is WCAP 13126, *A Demonstration Of Compliance Of The Primary Loop Pump Casings Of The North Anna Units 1 And 2 To ASME Code Case N-481*, December, 1991)

Case N-504-1 -	"Alternative Rules for Repair of Class 1, 2, and 3 Austenitic Stainless Steel Piping"
Case N-513 -	"Evaluation Criteria for Temporary Acceptance of Flaws in Class 3 Piping" (10CFR50.55a places the following restrictions on the use on Code Case N-513: *1) The specific safety factors in paragraph 4.0 must be satisfied;* *2) May not be applied to components other than pipe and tubing, such as pumps, valves, expansion joints, and heat exchangers;* *3) May not be applied to leakage through a flange gasket;* *4) May not be applied to threaded connections employing nonstructural seal welds for leakage prevention [through seal leakage is not a structural flaw, thread integrity must be maintained]; and* *5) May not be applied to degraded socket welds.)*
Case N-522 -	"Pressure Testing of Containment Penetration Piping." (Case will be implemented with the following condition as specified in Regulatory Guide 1.147; *"The test should be conducted at the peak calculated containment pressure and the test procedure should*

	permit the detection and location of through-wall leakage in containment isolation valves (CIV's) and pipe segments between the CIV's.")
Case N-523 -	"Mechanical Clamping Devices for Class 2 and 3 Piping" (Note: the Code Case erroneously references Table NC-3321-2, rather than Table NC-3321-1.)
Case N-537-	"Location of Ultrasonic Depth-Sizing Flaws."

The NRC did not previously approve the following Code Cases for use. Actions taken as part of this ISI Plan have requested authorization for their use as allowed by 10CFR50.55a (a) (3). However, until such time as approval is obtained, the provisions of a following Code Case cannot be used.

Case N-416-2-	"Alternative Pressure Test Requirements for Welded Repairs, Fabrication Welds or Replacement Parts and Piping Assemblies, of Installation of Replacement Items by Welding Class 1, 2, and 3"
Case N-532-	"Alternative Requirements to Repair Replacement Documentation Requirements and Inservice Summary Report Preparation and by IWA-4000 and IWA-6000"
Case N-533-1-	"Alternative Requirements for VT-2 Visual Examination of

Class 1, 2, and 3 Insulated Pressure-Retaining Bolted Connections."

Case N-566-1- "Corrective Action for Leakage Identified at bolted Connections"

Case N-573- "Transfer of Procedure Qualification Records Between Owners"

Case N-586- "Alternative Additional Examination Requirements for Class 1, 2, and 3 Piping, Components, and Supports"

Case N-597- "Requirements for Analytical Evaluation of Pipe Wall Thinning"

Case N-598- "Alternative Requirements to Required Percentages of Examination"

Case N-623- "Deferral of Inspections of Shell-to-Flange and Head-to-Flange Welds of a Reactor Vessel"

1.1.5.9 Augmented Examinations

Augmented examinations resulting from commitments made to the Nuclear Regulatory Commission may or may not involve components of the ISI Plan. The implementation of augmented examinations is achieved by programs and procedures maintained by either the NAPS 2 staff or the corporate based engineering staff and not by implementation of the ISI Plan. However, some augmented examinations are part of the ISI Schedule for the purposes of scheduling and tracking the completion of the involved examinations. The inclusion of an augmented examination into the ISI Schedule does not make

the examination part of the ISI Plan. Any augmented examination included in the ISI Schedule is clearly identified as an augmented examination.

1.2 DRAWING LIST

NORTH ANNA POWER STATION UNIT 2

THIRD INSPECTION INTERVAL

ISI CLASSIFICATION BOUNDARY DRAWINGS

NORTH ANNA POWER STATION UNIT 2, INTERVAL 3
ISI CLASSIFICATION BOUNDARY DRAWINGS

List of Drawings

11715-CBB-006A-3, Sheet-002	Air Cooling and Purge System
11715-CBB-040C-3, Sheet-002	Control Room Chilled Water System
11715-CBB-40D-3, Sheet-002	Air Condition Condenser Water System
11715-CBM-078A-3, Sheet-001	Service Water System
11715-CBM-078A-3, Sheet-003	Service Water System
11715-CBM-078A-3, Sheet-004	Service Water System
11715-CBM-078B-3, Sheet-003	Service Water System
11715-CBM-078C-3, Sheet-002	Service Water System
11715-CBM-078G-3, Sheet-002	Service Water System
11715-CBM-078H-3, Sheet-001	Service Water System
11715-CBM-079A-3, Sheet-002	Component Cooling
11715-CBM-079A-3, Sheet-003	Component Cooling
11715-CBM-088A-3, Sheet-001	Compressed Air
11715-CBM-088A-3, Sheet-003	Compressed Air
11715-CBM-105B-3, Sheet-002	Secondary Plant Gas
11715-CBM-106A-3, Sheet-001	Containment Atmosphere Clean-up
11715-CBM-106A-3, Sheet-002	Containment Atmosphere Clean-up
11715-CBM-106A-3, Sheet-003	Containment Atmosphere Clean-up
11715-CBM-106A-3, Sheet-004	Containment Atmosphere Clean-up
12050-CBB-104A-3, Sheet-001	Fire Protection Hose Rack System
12050-CBM-070A-3, Sheet-003	Main Steam System
12050-CBM-070B-3, Sheet-001	Main Steam System
12050-CBM-070B-3, Sheet-002	Main Steam System
12050-CBM-070B-3, Sheet-003	Main Steam System
12050-CBM-072A-3, Sheet-002	Auxiliary Steam and Air Removal System
12050-CBM-074A-3, Sheet-001	Feedwater System
12050-CBM-074A-3, Sheet-003	Feedwater System
12050-CBM-079A-3, Sheet-001	Component Cooling Water System
12050-CBM-079A-3, Sheet-002	Component Cooling Water System
12050-CBM-079A-3, Sheet-003	Component Cooling Water System
12050-CBM-079A-3, Sheet-004	Component Cooling Water System
12050-CBM-079A-3, Sheet-005	Component Cooling Water System
12050-CBM-079B-3, Sheet-003	Component Cooling Water System
12050-CBM-079C-3, Sheet-001	Component Cooling Water System
12050-CBM-082A-3, Sheet-001	Compressed Air System
12050-CBM-082B-3, Sheet-001	Compressed Air System
12050-CBM-082B-3, Sheet-002	Compressed Air System
12050-CBM-082C-3, Sheet-002	Compressed Air System
12050-CBM-082F-3, Sheet-002	Compressed Air System
12050-CBM-089A-3, Sheet-003	Sampling System
12050-CBM-089B-3, Sheet-001	Sampling System
12050-CBM-090A-3, Sheet-001	Vent and Drain System

12050-CBM-090A-3, Sheet-003	Vent and Drain System
12050-CBM-090B-3, Sheet-001	Vent and Drain System
12050-CBM-091A-3, Sheet-001	Cont. Quench and Recirc. Spray Sub System
12050-CBM-091A-3, Sheet-002	Cont. Quench and Recirc. Spray Sub System
12050-CBM-091A-3, Sheet-003	Cont. Quench and Recirc. Spray Sub System
12050-CBM-091A-3, Sheet-004	Cont. Quench and Recirc. Spray Sub System
12050-CBM-091B-3, Sheet-001	Cont. Quench and Recirc. Spray Sub System
12050-CBM-092A-3, Sheet-001	Leakage Monitoring System
12050-CBM-092A-3, Sheet-002	Containment Vacuum System
12050-CBM-093A-3, Sheet-001	Reactor Coolant System-Loop 1
12050-CBM-093A-3, Sheet-002	Reactor Coolant System-Loop 2
12050-CBM-093A-3, Sheet-003	Reactor Coolant System-Loop 3
12050-CBM-093B-3, Sheet-001	Reactor Coolant System
12050-CBM-093B-3, Sheet-002	Reactor Coolant System
12050-CBM-094A-3, Sheet-001	Residual Heat Removal System
12050-CBM-094A-3, Sheet-002	Residual Heat Removal System
12050-CBM-095A-3, Sheet-001	Chem. And Volume Control System
12050-CBM-095A-3, Sheet-002	Chem. And Volume Control System
12050-CBM-095B-3, Sheet-001	Chem. And Volume Control System
12050-CBM-095B-3, Sheet-002	Chem. And Volume Control System
12050-CBM-095C-3, Sheet-001	Chem. And Volume Control System
12050-CBM-095C-3, Sheet-002	Chem. And Volume Control System
12050-CBM-096A-3, Sheet-001	Safety Injection System
12050-CBM-096A-3, Sheet-002	Safety Injection System
12050-CBM-096A-3, Sheet-003	Safety Injection System
12050-CBM-096B-3, Sheet-001	Safety Injection System
12050-CBM-096B-3, Sheet-002	Safety Injection System
12050-CBM-096B-3, Sheet-003	Safety Injection System
12050-CBM-096B-3, Sheet-004	Safety Injection System
12050-CBM-098A-3, Sheet-002	Stream Generator Blowdown System
12050-CBM-098A-3, Sheet-003	Stream Generator Blowdown System
12050-CBM-098A-3, Sheet-004	Stream Generator Blowdown System
12050-CBM-102A-3, Sheet-002	Chemical Feed System
12050-CBM-102B-3, Sheet-001	Chemical Feed System
12050-CBM-L&S-3, Sheet-001	Legend And Symbols
13075-CBM-093D-3, Sheet-001	Reactor Coolant System
13075-CBM-093D-3, Sheet-002	Reactor Coolant System

VIRGINIA ELECTRIC AND POWER COMPANY

(DOMINION)

NORTH ANNA POWER STATION

UNIT 2

INSERVICE INSPECTION PLAN

COMPONENTS AND COMPONENT SUPPORTS

THIRD INSPECTION INTERVAL

SECTION 2

TABLE OF CONTENTS

SECTION	TITLE	PAGE
2.0	Inservice Inspection Plan for Components	21
2.1	ISI Plan Description	21
2.2	ISI Plan Summary	21
2.3	Relief Requests Summary	22
2.4	Relief Requests for Components	26
2.5	Relief Requests for System Pressure Test	60
2.6	Relief Requests for Component Supports	78
2.7	Relief Requests for Partial Examinations	83
2.8	Appendix 1 - Technical Reports	85

2.0 Inservice Inspection Plan for Components

2.1 ISI Plan Description

2.1.1 The Inservice Inspection Plan (ISI Plan) for Class 1, 2, and 3 components meets the requirements of Section XI of the ASME Boiler and Pressure Vessel Code, 1995 Edition with addenda up to and including the 1996 Addenda (Section XI). Where these requirements are determined to be impractical, or where alternatives are identified, specific requests for relief in accordance with either 10CFR50.55a(g)(5)(iii) or 10CFR50.55a(3)(i) or (ii) have been written and included in this section with one noteworthy exception. It involves an alternative previously submitted in accordance with 10CFR50.55a(a)(3)(i) and has significant impact on the overall basis and implementation of the program. It proposes to base the selection, examination method, and extent and frequency of examination of Class 1 "Pressure Retaining Welds In Piping" (Examination Category B-J) and Class 1 "Pressure Retaining Dissimilar Metal Welds In Vessel Nozzles" (Examination Category B-F) on the risk-informed technology documented in "Westinghouse Owner's Group Application of Risk-informed Method to Piping Inservice Inspection Topical Report," WCAP-14572, Revision 1-NP-A, and Code Case N-577-1, "Risk-Informed Requirements for Class 1, 2, or 3, Piping, Method A." This alternative was submitted to the Nuclear Regulatory Commission independently of this document on April 26, 2001, letter number 01-234. (Further references to this alternative program will identify it as the "risk-informed program.")

2.1.2 Repairs and Replacements shall be in accordance with the North Anna Power Station Unit 2 (NAPS 2) administrative procedures as well as the Virginia Electric and Power Company (Dominion) corporate administrative procedures Together, these two sets of procedures assure compliance with Section XI.

2.2 ISI Plan Summary

2.2.1 For all components other than those being selected by the risk-informed program, the ISI Plan utilizes the Tables IWB-2500-1, IWC 2500-1, IWD-2500-1, and IWF-2500-1 of Section XI to determine the components, component supports, or parts there of that require examination; the examination requirement(s); the examination method(s); the acceptance standard; and the extent and frequency of examination. Components selected for examination are identified in the ISI Schedule, a separate section of the ISI Plan. Additionally, components selected for examination by the risk-informed program are identified, scheduled for examination, and performance tracked as part of the ISI Schedule.

2.2.2 The ISI Plan defines the interval and period pressure testing requirements in accordance with Examination Categories B-P, C-H and D-A; the title of all three examination categories being "All Pressure Retaining Components." The risk-informed program does not provide alternatives to the pressure test program defined by the noted examination categories.

Pressure testing required for Section XI repair/replacement activity will be conducted in accordance with the repair and replacement program as documented in the administrative procedures.

2.3 Relief Requests Summary

2.3.1 Relief requests involving components or nondestructive examination (NDE) are presented in a numeric sequence with a "NDE" prefix. Pressure tests relief requests are presented in a numeric sequence with a "SPT" prefix. Similarly, relief requests involving component supports are presented with a "CS" prefix. As the examinations of the interval are completed, because of its design, NAPS 2 will be unable to obtain "essentially 100%" of each required examination. Therefore, relief requests asking approval for partially completed examinations will be submitted.

2.3.2 The following is a summary of the third interval relief requests.

Component and NDE Relief Requests

NDE-001- Requests permission to examine the saddle welds instead of the covered branch connection welds in the Main Steam Headers. The branch connection welds are required to have a surface examination, but the welds are covered with a saddle plate.

NDE-002 - Requests permission to perform a visual examination of the inside surface of the obstructive welds of the Outside Recirculation Spray Pump Casings, if the pumps are opened for maintenance. The welds are obstructed from both the inside and the outside and cannot receive the Section XI required surface examinations.

NDE-003 - Requests permission to perform a visual examination of the inside surface of the obstructive welds of the Low Head Safety Injection Pump Casings, if the pumps are opened for maintenance. The welds are obstructed from both the inside and the outside and cannot receive the Section XI required surface examinations.

NDE-004 - Proposes to continue to use the weld reference system established in the second inspection interval as opposed to the reference system required by Section XI.

NDE-005 - Proposes to continue to use the electronic reference system associated with the reactor inspection tools as opposed to establishing the reference system required by the Section XI.

NDE-006 - Requests the deferral of 100% of the reactor vessel shell-to-flange weld to the third period by use of Code Case N-623, "Deferral of Inspections of Shell-to-Flange and Head-to-Flange Welds of a Reactor Vessel." This request only asks for permission to use of Code Case N-623 to the shell-to-flange weld.

NDE-007- Requests the elimination of the volumetric examinations of the shell-to-vessel weld and the nozzle inside radius area associated with the surge line nozzle of the pressurizer.

NDE-008 - Requests permission to continue to use existing calibration blocks for components not being examined to the requirements of Appendix VIII.

NDE-009 - Requests permission to continue to allow piping degraded by Microbiological Influenced Corrosion (MIC) to remain in service for up to 14 days; and, if the analysis demonstrates acceptable component integrity, allow the component to remain in service for up to 18 months. Sockets welds and sections of piping that are not accessible for analysis are excluded from this request.

NDE-010 - Proposes to use the reporting requirements of Code Case N-532, "Alternative Requirements to Repair and Replacement Documentation Requirements and Inservice Summary Report Preparation and Submission as Required by IWA-4000 and IWA-6000," as alternative to the NIS-1 and NIS-2 reports required by Section XI.

NDE-011- Requests permission to use Code Case N-573, "Transfer of Procedure Qualification Records Between Owners." Allows a welding procedure qualified by one Owner to be used by another Owner without requalification.

NDE-012- Requests permission to use Code Case N-586, "Alternative Additional Examinations Requirements for Class 1, 2, and 3 Piping Components and Supports." This Code Case allows expansions to be based on the root cause of the failure rather than a more random expansion. It would also allow for no expansion if the failure is unique to the component or support involved.

NDE-013 - Requests permission to use Code Case N-598, "Alternative Requirements to Required Percentages of Examination." This Code Case will allow examinations to be shifted forward to the first period provided the total number of examinations in that period does exceed 50%. It should allow for better optimization of examinations.

NDE-014 - Requests permission to use Code Case N-597, "Requirements for Analytical Evaluation of Pipe Thinning." This will allow pipe with flow assisted corrosion (FAC) degradation found to be unacceptable under the current Code minimum thickness requirements to remain in service for an additional period of time if the requirements of the Code Case are met.

NDE-015 - Requests approval to use the requirements of Code Case N-622, "Ultrasonic Examination of RPV and Piping, Bolts and Studs", Appendix IV, paragraphs 3.2(b) and 3.2(c) for sizing acceptance criteria for demonstrations associated with the clad-to-base metal interface of reactor vessels.

System Pressure Test Relief Request

SPT-001 - Requests permission to perform the Class 1 System Leakage Test from existing structures, ladders and platforms as opposed to using scaffolding to gain access to within 6 feet. Basis is the sub-atmospheric conditions within containment at the time of the test.

SPT-002 - Requests permission to not test two pipe sections located between the reactor vessel head vent isolation valves.

SPT-003 - Requests permission to use Code Case N-566-1, "Corrective Action for Leakage Identified at Bolted Connections." This Code Case allows an evaluation to be performed to determine if a bolt must be removed before its removal is required.

SPT-004- Proposes to conduct the hydrostatic test of Class 3 components to the requirements of Code Case N-498-1, "Alternative Rules for 10-Year System Hydrostatic Testing for Class 1, 2, and 3 Systems" without adopting the Code Case. Code Case N-498-1 allows the hydrostatic pressure test to be performed at normal operating pressure and temperature. The 95-96 Edition of Section XI incorporates the reduced pressure testing requirements for Class 1 and 2 components, thus making the use of the Code Case unnecessary for those components.

SPT-005 - Requests permission to use alternative requirements to satisfy the VT-2 visual examination requirements related to the penetrations in the bottom of the reactor vessel. Specifically, an examination will be performed when the containment is at atmospheric conditions.

SPT-006 - Requests the use of Code Case N-533-1, "Alternative Requirements for VT-2 Visual Examinations of Class 1, 2, and 3, Insulated Pressure-Retaining Bolted Connections." This Code Case allows the bolted connections in systems borated for the purpose of controlling reactivity to be examined during the normal refueling outage in lieu of when the connections are at operational pressure.

SPT-007 - Requests permission to not test the approximately 30 small diameter ($\leq$ 1" NPD) vent, drain and sample lines as part of the reactor coolant system pressure test. As an alternative an examination will be performed each refueling outage of the small piping lines looking for evidence of leakage.

SPT-008 - Requests permission to use Code Case N-416-2, "Alternative Pressure Test Requirements for Welded Repairs, Fabrication Welds for Replacement Parts, and Piping Subassemblies, or Installation of Replacement Items by Welding, Class 1, 2, and 3." This revision to Code Case N-416-1 has been expanded in scope to assure that welds that are "fabricated" (i.e. joining two components together, but not to the plant) receive the same pressure test as welds used for installation (i.e. joining components to the plant). (Note: Code Case N-416-1 is included in the ISI Plan as an approved Code Case)

Component Support Relief Requests

CS-001 - This request asks permission to continue to use Technical Specifications for the examination and testing of snubbers as opposed to OM-4 or ISTD. ISTD is very similar to Technical Specifications for examination and testing but would require a Technical Specification change to use. ISTD also includes additional administrative requirements.

Section 2.4

RELIEF REQUESTS
FOR
COMPONENTS

RELIEF REQUEST NDE-001

I. IDENTIFICATION OF COMPONENTS

Branch connection welds - Main steam relief headers

Drawing No.	Weld Nos.
12050-WMKS-101A-1	SW-77 to SW-81
12050-WMKS-101A-2	SW-83 to SW-87
12050-WMKS-101A-3	SW-7W to SW-11W

II. IMPRACTICAL CODE REQUIREMENTS

Section XI of the ASME Boiler and Pressure Vessel Code, 1995 Edition with addenda up to and including the 1996 Addenda, Category C-F-2, Item No. C5.81 requires circumferential pipe branch connection welds be surface examined.

III. BASIS FOR RELIEF

The design of the main steam relief header branch connection welds requires the use of a reinforcement pad. These pads are fillet welded to both sections of pipe forming the branch connections and completely encase the branch connection welds. Therefore, the branch connection welds cannot receive the required examinations. A surface examination of the reinforcement pad's fillet welds associated with each branch connection weld selected for examination is proposed by this request for relief.

A similar relief request was approved for North Anna Unit 1 for the unit's third interval inspection ISI Program by letter dated April 25, 2000, under TAC NO. MA5750.

IV. ALTERNATE PROVISIONS

A surface examination will be performed of the pad-to-pipe fillet welds of the reinforcement pad associated with each branch connection weld selected for examination during the interval.

End of Relief Request NDE-001

RELIEF REQUEST NDE-002

I. IDENTIFICATION OF COMPONENTS

Pump Casing Welds

Outside Recirculation Spray Pumps
(2-RS-P-2A and 2-RS-P-2B)

Drawing No.	Weld Nos.
12050-WMKS-RS-P-2A	SW-1, SW-2, SW-3 LS-6, LS-7, LS-8 LS-9 (Partial Access) LS-10 (Partial Access)
12050-WMKS-RS-P-2B	SW-1, SW-2, SW-3 LS-6, LS-7, LS-8 LS-9 (Partial Access) LS-10 (Partial Access)

II. IMPRACTICAL CODE REQUIREMENTS

Section XI of the ASME Boiler and Pressure Vessel Code, 1995 Edition with addenda up and including the 1996 Addenda, Category C-G, Item Number C6.10, requires pump casing welds to have a surface examination each inspection interval. Note (2) to Examination Category C-G states that the examination may be performed from either the inside or outside surface of the component.

III. BASIS FOR RELIEF

A surface examination of all of the pumps casing welds associated with the Outside Recirculation Spray Pumps from either the outside diameter (O.D.) or the inside diameter (I.D.) is not practical. Each of the two outside recirculation spray pump casings has a total of five circumferential welds and five longitudinal welds. Three of the circumferential welds (SW-1, SW-2, and SW-3), and three of the longitudinal welds (LS-6, LS-7 and LS-8) are completely encased in concrete and are not accessible for examination from the O.D. Of the remaining two longitudinal welds, one weld is partially encased in concrete (LS-9) and one weld is partially covered by a vibration plate (LS-10). Complete O.D. examinations cannot be performed on both of these longitudinal welds. The remaining two circumferential welds are completely accessible for examinations from the O.D. Surface examinations from the Inside Diameter (I.D.) are not a practical alternative. Access to the inside of a pump casing is limited by its physical size (24 inch outside

diameter for most of its approximately 49 feet length) as well as the pump shaft and the pump shaft support obstructions which are within the pump casing when the pump is assembled. The pump assembly weights approximately 7000 pounds and with the pump driver added, the weight is approximately 10,500 pounds. The pump assembly extends essentially the full length of the pump casing.

The removal of the pump from the pump casing to gain access for examination would be a significant undertaking and is considered to be impractical as it allows access to only a small portion of the overall weld area inaccessible when the pump assembly is in place.

A similar relief request was approved for North Anna Unit 1 for that unit's third interval inspection ISI Program by letter dated April 25, 2000, under TAC NO. MA5750.

IV. ALTERNATE PROVISIONS

A surface examination of the accessible portions of the circumferential and longitudinal welds will be performed to the extent and frequency described in IWC-2500. A remote visual examination (VT-1) of the I.D. of the pump casing welds will be performed only if the pump is disassembled for maintenance.

End of Relief Request NDE-002

RELIEF REQUEST NDE-003

I. IDENTIFICATION OF COMPONENTS

Pump Casing Welds

Low Head Safety Injection Pumps
(2-SI-P-1A and 2-SI-P-1B)

Drawing No.	Weld Nos.
12050-WMKS-SI-P-1A	1, 2, 3 LS-1, LS-2, LS-3 LS-4 (Partial Access) LS-5 (Partial Access)
12050-WMKS-SI-P-1B	1, 2, 3 LS-1, LS-2, LS-3 LS-4 (Partial Access) LS-5 (Partial Access)

II. IMPRACTICAL CODE REQUIREMENTS

Section XI of the ASME Boiler and Pressure Vessel Code, 1995 Edition, with addenda up to and including the 1996 Addenda, Category C-G, Item Number C6.10, requires pump casing welds to have a surface examination each inspection interval. Note (2) to Examination Category C-G states that the examination may be performed from either the inside or outside surface of the component.

III. BASIS FOR RELIEF

A surface examination of all of the pumps casing welds from either the inside or outside surface is not practical. Each of the two low head safety injection pump casings has a total of five circumferential welds and five longitudinal welds. Three of the circumferential welds (1, 2 and 3) and three of the longitudinal welds (LS-1, LS-2 and LS-3) are completely encased in concrete and are not accessible for examination. Of the remaining two longitudinal welds, one weld is partially encased in concrete (LS-4) and one weld is partially covered by a vibration plate (LS-5). Partial Outside Diameter (O.D.) examinations can be performed on both of these longitudinal welds. The remaining two circumferential welds are completely accessible for examinations from the O.D. Surface examinations from the Inside Diameter (I.D.) are not a practical alternative. Access to the inside of the pump casings is limited by physical size (24 inch outside diameter for most of

its approximately 49 feet length) as well as the pump shaft and the pump shaft support obstructions which are within the pump casing when the pump is assembled. The pump assembly is of significant weight (several tons) and extends essentially the full length of the pump casing.

The removal of the pump from the pump casing to gain access for examination would be a significant undertaking and is considered to be impractical as it allows access to only a small portion of the overall weld area inaccessible when the pump assembly is in place.

A similar relief request was approved for North Anna Unit 1 for that unit's third interval inspection ISI Program by letter dated April 25, 2000, under TAC NO. MA5750.

IV. ALTERNATE PROVISIONS

A surface examination of the accessible portions of circumferential and accessible longitudinal welds will be performed to the extent and frequency described in IWC-2500. A remote visual examination (VT-1) of the I.D. of the pump casing welds will be performed only if the pump is disassembled for maintenance.

End of Relief Request NDE-003

RELIEF REQUEST NDE-004

I. IDENTIFICATION OF COMPONENTS

ISI Class 1 and 2 piping, vessel and component welds including the head-to-flange reactor vessel weld, but excluding all other reactor vessel welds and the reactor vessel nozzle area examined by the automated vessel examination tool.

II. CODE REQUIREMENTS

Section XI of the ASME Boiler and Pressure Vessel Code, 1995 Edition with addenda up to and including the 1996 Addenda, IWA-2600, "Weld Reference System."

III. BASIS FOR PROPOSED ALTERNATIVE

The original construction code used at North Anna Power Station, ANSI B31.7, 1969 Edition, did not establish a weld reference system. Establishment of a weld reference system cannot be practically attained within the scope and schedule of existing outages. During the second inspection interval, the implementation of this Section XI Code requirement was also considered to be impractical and a request for relief was submitted (NDE-13 of the second inspection interval ISI Program). The alternative provisions proposed in this request for relief are the same as those proposed and accepted by the NRC for the second inspection interval (Reference: NRC letter No. 92-730, Dated 11/15/92). Consistent with the commitments made in the second inspection interval, the alternative reference system was established within the plant on those welds examined as part of the second inspection interval. Continued use of the alternative reference system is reasonable because its provides an acceptable level of quality and safety. To reject the alternative reference system, already in use, would require the plant to establish either the system required by the Section XI Code in IWA-2600 or some other alternative system yet to be developed. In either case, significant effort would be expended to achieve compliance with the requirements of IWA-2600 (or as modified) without any justifiable gain in quality or safety. Therefore, continued use of the alternative reference system presented below is requested under the provisions of 10CFR50.55a(3)(a).

A similar relief request was approved for North Anna Unit 1 for that unit's third interval inspection ISI Program by letter dated April 25, 2000, under TAC NO. MA5750.

IV. ALTERNATE PROVISIONS

NAPS 2 uses weld isometrics drawings (the WMKS series) to provide a detailed identification of location of each weld requiring examination as part of the

inspection interval. It is our intention to use these drawings for identifying and locating welds in the third inspection interval. As welds, which require a volumetric examination but did not require examination as part of the second inspection interval, are examined, the alternative system will establish a reference for each weld, indicating a zero point and direction of examination. The volumetric examination of other welds will use the points of reference established in the second inspection interval. Welds that contain recordable indications (RI) shall be marked to ensure the relocation of the indication, using appropriate reference marks. All reference marks will be permanently fixed on the weld.

End of Relief Request NDE-004

RELIEF REQUEST NDE-005

I. IDENTIFICATION OF COMPONENTS

Pressure Retaining Welds in the Reactor Vessel and Vessel Nozzle Area Examined by the Automated Vessel Examination Tool.

II. CODE REQUIREMENTS

Section XI of the ASME Boiler and Pressure Vessel Code, 1995 Edition with addenda up to and including the 1996 Addenda, IWA-2600, "Weld Reference System."

III. BASIS FOR PROPOSED ALTERNATIVE

The original construction activities of the North Anna Power Station did not establish a reference system for the reactor vessel and associated dissimilar metal welds as required by IWA-2600. An automated examination tool now accomplishes these examinations. The automated examination tool establishes its reference point using an existing zero reference on the reactor vessel. This point allows the device to repeat examination locations without the necessity of any other reference systems. The tool determines its location by the use of an electronic encoder system, which provides for sufficient repeatability. This alternative referencing system is well established in the industry and provides an acceptable level of quality and safety.

The examinations performed by the automatic tool are conducted from the inside of the reactor vessel. Establishing the reference system required by IWA-2600 on the inside of an operation reactor vessel is a significant hardship that will provide no increase in quality or safety. Therefore, approval of this proposed alternative reference system is requested under the provisions of 10CFR50.55a(3)(i) and (ii).

A similar relief request was approved for North Anna Unit 1 for that unit's third interval inspection ISI Program by letter dated April 25, 2000, under TAC NO. MA5750.

IV. ALTERNATE PROVISIONS

The automated vessel examination tool examinations will continue to establish its reference system based upon the existing zero reference and the electronic encoding system designed into tool. No other system is planned or deemed necessary.

End of Relief Request NDE-005

RELIEF REQUEST NDE-006

I. IDENTIFICATION OF COMPONENTS

Shell-to-Flange Weld of the Reactor Vessel, Category B-A, Item B1.30.

II. CODE REQUIREMENTS

Section XI of the 1995 Edition with addenda up to and including the 1996 Edition requires the following:

1) Note (3) to Table IWB 2500-1, Examination Category B-A states, "(3) When using the Inspection Program B, the shell-to-flange weld examination may be performed during the first and third periods, in which case 50% of the shell-to-flange weld shall be examined by the end of the first period, and the remainder by the end of the third period. During the first period, the examination need only be performed from the flange face, provided this same portion is examined from the shell during the third period.", and

2) IWB-2420 (a) requires, "The sequence of component examinations which was established during the first inspection interval shall be repeated during each successive inspection interval to the extent practical."

III. BASIS FOR PROPOSED ALTERNATIVE

On February 26, 1999 the ASME Boiler and Pressure Vessel Code approved Code Case N-623, "Deferral of Inspections of Shell-to-Flange and Head-to-Flange Welds of a Reactor Vessel," dated February 26, 1999. Although this Code Case allows deferral of both the shell-to-flange and head-to-flange welds, this request for relief is applicable only to the shell-to-flange weld. The Code Case allows deferral of the shell-to-flange weld provided three conditions are met:

(a) No welded repair/replacement activities have ever been performed on the shell-to-flange weld. Compliance: No repair/replacement activity has been performed on the shell-to-flange weld.

(b) The shell-to-flange weld contains no identified flaws or relevant conditions that currently require successive inspections in accordance with IWB-2420 (b). Compliance: No successive inspections in accordance with IWB-2420 (b) are now or have ever been required on the shell-to-flange weld.

(c) The vessel is not in the first inspection interval. Compliance: The reactor vessel will be in its third inspection interval.

Therefore the conditions of Code Case N-623 have been satisfied.

The effect of IWB-2420 is to require the examinations of the shell-to-flange weld to be repeated on a 10-year schedule to the extent practical. If the examinations were divided between periods, as allowed by Note 3 to Table IWA 2500-1, Category B-A, this requirement would cause the initial schedule of each partial examination to be maintained. The technical justification of this requirement is to assure that components are not allowed to go excessive periods of time before reexamination. In anticipation of proposing this alternative, North Anna Power Station performed essentially a 100% examination of the shell-to-flange weld in the third period of the second inspection interval. This not only satisfied the examinations required by the third period but also repeated the examinations performed in the first period. It also allows the deferral of all shell-to-flange weld examinations to the third period while still maintaining the objective of IWB-2420 (a).

Having satisfied the requirements of Code Case N-623 and having performed an essentially 100% examinations of the shell-to-flange weld in the third period of the second inspection interval, NAPS 2 proposes that the deferral of the examination of 100% of the shell-to-flange weld to the third period of the third inspection interval provides an acceptable level of quality and safety. Approval for the deferral is requested under the provisions of 10CFR50.55a(3)(a).

IV. ALTERNATE PROVISIONS

As an alternative to the requirements of Note 3 to Table IWB-2500-1, Category B-A, all examinations of the shell-to-flange weld will be deferred to the third period of the third inspection interval by the implementation of Code Case N-623, "Deferral of Inspections of Shell-to-Flange and Head-to-Flange welds of a Reactor Vessel," dated February 26, 1999.

End of Relief Request NDE-006

RELIEF REQUEST NDE-007

I. IDENTIFICATION OF COMPONENTS:

Pressurizer (2-RC-E-2) nozzle-to-vessel weld 9 and nozzle inner radius section 9NIR (Figures NDE-007-1 and 2).

II. CODE REQUIREMENTS:

Section XI of the ASME Boiler and Pressure Vessel Code, 1995 Edition with addenda up to and including the 1996 Addenda, requires in Category B-D, Item Nos. B3.110 and B3.120, that the pressurizer surge line nozzle-to-vessel weld and nozzle inside radius section be volumetrically examined.

III. BASIS FOR PROPOSED ALTERNATIVE:

Access to the NAPS 2 pressurizer surge line nozzle is obstructed by multi-layered, stainless steel mirror insulation and the cables for the pressurizer heaters. Removal of the insulation and cables would be difficult as well as labor and time intensive. It is also likely that cable or heater pin damage would occur during removal. In addition it is possible that the impingement shield would have to be removed to gain access to the examination area.

It is almost certain that some, and possibly all, heater cables would have to be disconnected so that the cables can be pulled back to allow access for removing insulation and doing the exam. The exact scope of work to gain access cannot be fully determined until the unit is shutdown for the next refueling outage. Dose rates are predicted using a step approach to build the total projected exposure. There are four options possible. The worst case option assumes that all 78 heater cables have to be disconnected and pulled back. These cables have brazed connections that will be time consuming to remove and replace following the exam. This option carries a dose estimate of 56 rem. If the outer ring of heaters can be left intact during the examination (disconnect/reconnect 46 heaters), then the dose estimate is 35.2 rem. If only the first ring of heaters has to be dealt with (20 heaters), then the dose estimate is 18.3 rem. For the highly unlikely scenario of not having to disconnect any heater cables, the dose estimate is 5.3 rem. Separately, if the impingement shield has to be removed, then an additional 5.8 rem must be added to all these totals. It should be noted that the amount of heater cable work expected is likely to have a significant impact on overall outage manning requirements to accommodate the anticipated high dose.

Other personnel safety concerns potentially involved in this examination include the increased risk for an unplanned exposure event and prevention of contamination with personnel wedged between the surge line and the exposed portion of the pressurizer heaters. While actions would be taken to prevent any such events, the large dose rate gradients in the under-pressurizer area would challenge even the protection afforded by the best available technology. Temporary shielding is considered impractical in this regard because placement of the shielding material would obstruct and potentially preclude accessibility to the examination surface. Other issues include actual accessibility after removal of all interferences and the likelihood of difficulties in replacing the insulation to its original configuration. Furthermore, the amount of examination coverage would be dependent on the overall accessibility obtained.

In conjunction with license renewal, Westinghouse has performed an evaluation to address the impact of operational transients for NAPS 2 to account for insurge/outsurge transients in addition to design transients in the pressurizer lower head. The results of the evaluation show that the Cumulative Usage Factor (CUF), after service equivalent to 60 years of operation for the lower head to nozzle weld, is 0.32 for the inside surface and 0.07 for the outside surface. The CUFs for the nozzle inner radius are 0.17 (inside surface) and 0.09 (outside surface). These CUFs are considerably less than the design limit of 1.0 and are lower in magnitude than other locations on the pressurizer that are currently being inspected. For instance, the spray nozzle to safe-end weld has a CUF of 0.848 and the 6" safety and relief nozzle inside radius welds have a CUF of 0.148.

There are several uncertainties regarding an alternative examination of the inside surface of the pressurizer surge line area. An inspection may be able to be performed in which a boroscope could be fed through the manway and down through the middle of the pressurizer. Adding to the difficulty in performing such an exam, there is a screen device on the outlet of the surge line inner radius to control in-surge to the pressurizer. The boroscope would be positioned through the support plates, and then threaded through a screen inlet orifice, if possible, to the pressurizer surge line area. This examination could be partially obscured by the thermal sleeve. Furthermore, the resulting examination would only be of the cladding that covers the inside radius of the nozzle, which is considered to be only marginally beneficial in determining the structural integrity of the nozzle. Additionally, performing the visual inspection requires opening the RCS and establishing access and foreign material exclusion controls. The boroscope itself has the potential to become lodged inside the inlet screen device or behind a pressurizer heater support plate. This inspection effort and the significant potential risk associated with it are not commensurate with the limited benefit that may be obtained from the inspection.

As such, we are also applying for relief per 10 CFR 50.55a(a)(3)ii due to the fact that compliance with the specified requirements would result in hardship or unusual difficulties without a compensating increase in the level of quality and safety. A similar relief for North Anna Power Station Unit 1 was granted for use during the second interval by NRC Letter No. 92-255 dated 4/7/92, and during the third interval by NRC Letter No. 00-240 dated 4/25/00. This relief request was also approved for NAPS 2 for the second inspection interval by NRC letter dated 02/12/01. Similar relief was also granted for Surry Power Station Unit 1, Letter No. 95-404, dated 7/19/95, Surry Power Station Unit 2 Letter No. 95-480, dated 8/30/95, Byron Station dated 12/30/98, and Beaver Valley dated 10/8/97.

IV. ALTERNATE PROVISIONS:

The pressurizer surge line nozzle-to-vessel will be examined as part of the normally scheduled Class 1 system leakage test each refueling. In addition the surveillance requirements of Technical Specifications that determine the reactor coolant system leak rate and the containment atmosphere radioactivity will be satisfied.
These programs ensure that the overall level of plant quality and safety will not be compromised.

RELIEF REQUEST NDE-007
CONTINUED

FIGURE NDE-007-1

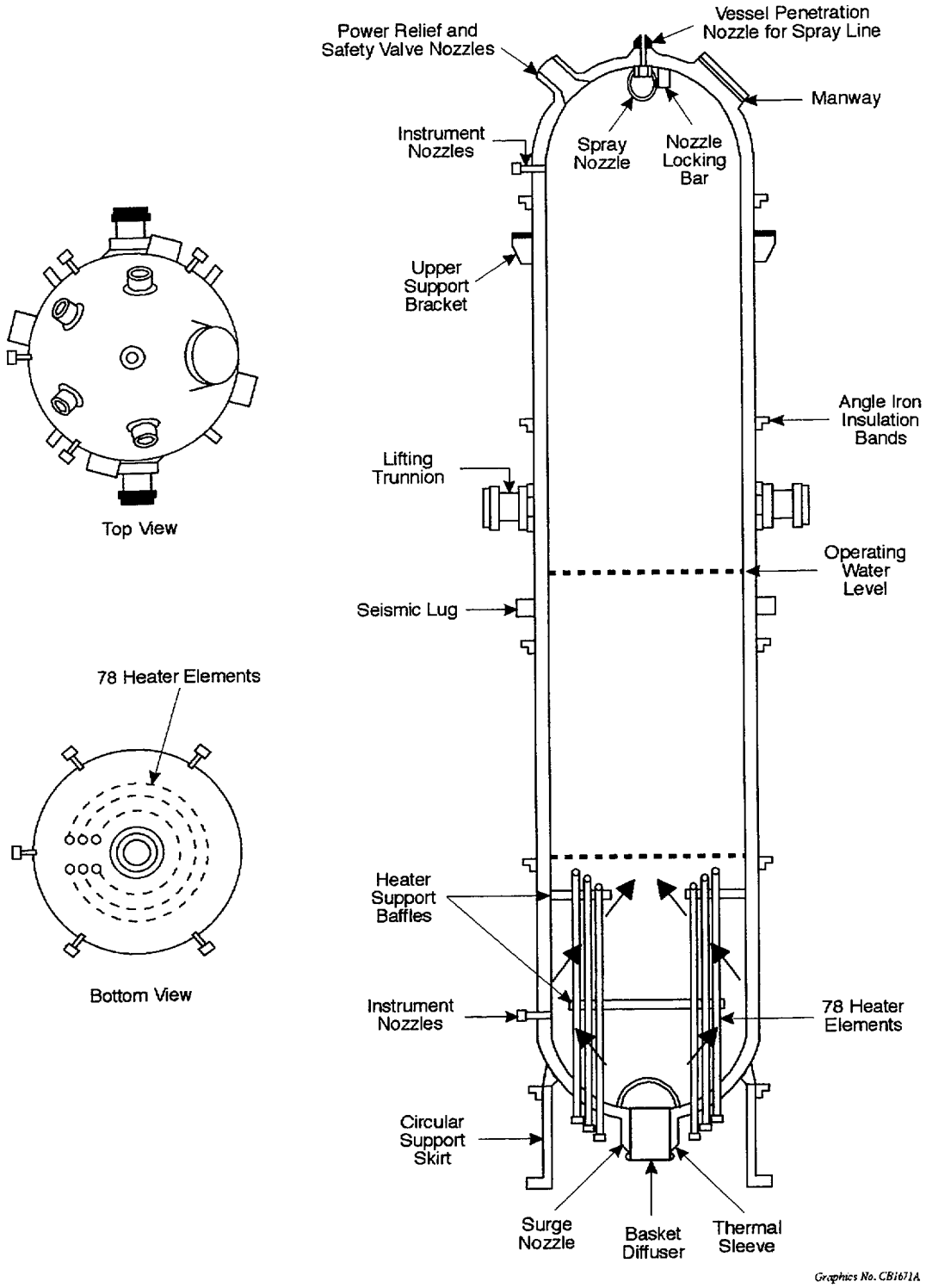

PRESSURIZER

RELIEF REQUEST NDE-007
CONTINUED

FIGURE NDE-007-2

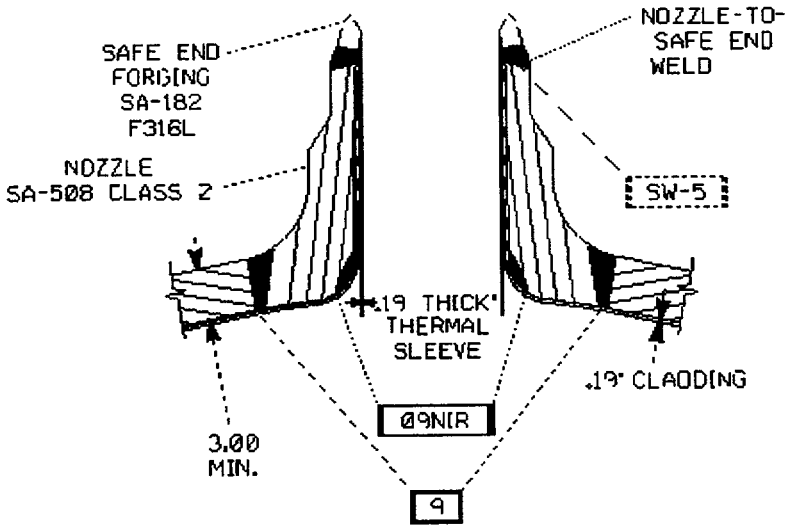

SURGE NOZZLE

End of Relief Request NDE-007

RELIEF REQUEST NDE-008

I. IDENTIFICATION OF COMPONENTS

Ultrasonic Calibration Blocks for Vessels greater than 2" in thickness that are not required to be examined in accordance with Appendix VIII to ASME Section XI

Ultrasonic Calibration Blocks for Piping and Vessels less than or equal to 2" in thickness that are not required to be examined in accordance with Appendix VIII to ASME Section XI

II. IMPRACTICAL CODE REQUIREMENTS

Section XI of the ASME Boiler and Pressure Vessel Code, 1995 Edition with addenda up to and including the 1996 Addenda, provides requirements for fabrication of ultrasonic calibration blocks. Specifically, Article I-2000 of Appendix I.

III. BASIS FOR RELIEF

North Anna Power Station was essentially constructed prior to the issue and adoption of the current requirements of ASME Section XI. Therefore, the original ultrasonic calibration blocks used for North Anna were fabricated before the current guidelines of ASME Section XI were developed and approved. Meeting the requirements of Article I-2000 of Appendix I for the calibration blocks as specified in the most recently approved Section XI Code, identified above, would require new calibration blocks to be fabricated.

The existing calibration blocks have always been used to examine the above components at North Anna. The calibration blocks are generally in compliance with current requirements of ASME Section V. Examples in the variations in design include the blocks for piping and vessels $\leq$ 2 inches do not meet the recommended design specified by Section V for a thickness less than 1 inch in that the notches are not staggered. Also, the notches in some of the piping blocks are located one (1) "t" (or thickness) from the end of the block instead of 1 1/2" as specified. Another example includes the vessel calibration blocks used for the reactor vessel head-to-flange weld, steam generator primary side tubesheet-to-head weld, and pressurizer welds in that they are partially clad instead of fully clad as specified. These variations in design are not significant and do not pose a threat to the quality of the resultant examinations.

Using the existing calibration blocks for the components identified in Section I, allows correlation of ultrasonic data from the first and second interval examinations as required by paragraph IWA-1400(h). It is considered important to maintain the repeatability of the examinations as much as possible by maintaining the use of the existing calibration blocks. Additionally, it is expected

that the cost of obtaining fully compliant calibration blocks will result in an expenditure not commensurate with the little or no gain in safety that could be obtained from their use.

A similar relief request was approved for North Anna Unit 1 for that unit's third interval inspection ISI Program by letter dated April 25, 2000, under TAC NO. MA5750.

IV. ALTERNATIVE PROVISIONS

The existing calibration blocks will be used to perform examinations during the third inspection interval in lieu of the current code requirements for calibration blocks. This alternative will be applicable to examinations not subject to the requirements of Appendix VIII to the Section XI Code.

End of Relief Request NDE-008

RELIEF REQUEST NDE-009

I. IDENTIFICATION OF COMPONENTS

	Drawing #
Service Water System	11715-CBB-040D-3 SHT. 2 11715-CBM-078A-3 SHTS. 1 and 4 11715-CBM-078B-3 SHT. 3 11715-CBM-078C-3 SHT. 2 11715-CBM-078G-3 SHT. 2

This request includes pressure retaining piping, fittings, and associated butt welds that are accessible for flaw characterization on the moderate energy stainless steel piping of the Service Water System (SW). These piping systems provide cooling water from the SW Reservoir to safety related equipment and returns the SW back to the return headers. Normal operating pressure is 100 PSIG. The design pressure is 150 PSIG and the design temperature is 150°F. This is an ASME, Section XI, Class 3 system.

Attachment 1 to this request provides an identification of each piping segment within the scope of this request for relief. The piping segments are identified by their line number designation, which is a unique identifier.

II. IMPRACTICAL CODE REQUIREMENTS

The SW System has experienced through-wall leakage caused by Microbiological Influenced Corrosion (MIC). Chemical treatment of the SW System has not been effective in eliminating MIC. The SW System is being monitored for MIC.

Identification of additional through-wall leakage is anticipated. Through-wall leakage is required to be located and corrected in accordance with the requirements of Section XI, IWA-5250, of the 1995 Edition with addenda up to and including the 1996 Addenda. The specific Code requirement for which relief is requested is IWA-5250(a)(3).

"IWA-5250 Corrective Action

(a) The source of leakage detected during the conduct of a system pressure test shall be located and evaluated by the Owner for corrective measures as follows:"

"(3) Components requiring correction shall have repair/replacement activities performed in accordance with IWA-4000."

Article IWA-4000 of ASME Section XI Code requires removal of the flaw and subsequent weld repair or replacement without consideration of the other concerns. Alternatively, the use of ASME Code Case, N-513, "Evaluation Criteria for Temporary Acceptance of Flaws in Class 3 Piping," does allow deferral of repairs provided certain criteria are met and is authorized for use except for certain restrictions imposed by 10 CFR 50.55a. However, the Code Case requires a Code repair or replacement not exceeding the time to the next scheduled outage. Additionally, the Code Case provides no timeframe for completion of the evaluation of the flaw.

III. BASIS FOR RELIEF

Code repairs for through-wall leaks require the line to be isolated and drained. Taking a train of SW out of service in some instances is a major evolution and requires entering a Technical Specification action statement. The SW System is common to both Unit 1 and Unit 2. As long as one unit is in Mode 1, 2, 3, or 4 both trains of SW must be operable. If both Units are in Mode 5 or 6, then one train of SW must be operable. It is very unlikely for both units in Mode 5 or 6 at the same time as a planned evolution.

Historically, the timeframe from detection of the flaw to completion of the flaw evaluation process for the components in the affected system has been within 14 days of detection, otherwise the component has been repaired or replaced. This request for relief proposes to continue this timeframe for the evaluation process as it is appropriate for the damage mechanism. Also this request for relief proposes to allow a period of up to 18 months to effect a Section XI repair/replacement of any leakage left in service under the provisions of this request and Code Case N-513. Eighteen months is the normal fuel cycle for NAPS 2 and would therefore be the maximum time allowed for leakage to remain in service under the provisions of CC N-513. The flexibility gained by these two proposed time periods for assessment of the leakage and repair/replacement activities allows the MIC degradation to be managed without excessive action statements being forced by Technical Specifications and Section XI.

These time periods have been approved previously by the NRC for NDE-32 (second inspection interval corresponding relief request) in letter 98-720B, dated December 22, 1998 (TAC NOS. MA1222 and MA1223). In addition a similar relief request was approved for North Anna Unit 1 by letter, dated April 27, 2000. The request for relief is identified as NDE -15, for that unit's third inspection interval and the work was performed under TAC NO. MA8567. The approval of NDE-15 for North Anna Unit 1 limited its applicability only to "service water piping that is accessible for flaw characterization." The limitation thus excludes leaks in sections of SW piping, fittings and welds that are inaccessible for flaw characterization, or leaks in socket welds. This request for relief incorporates these limitations.

VI. ALTERNATIVE PROVISIONS

Within 14 days, Code repairs, in accordance with IWA-5250(a)(3), will be performed to the above identified sections of pressure piping, fittings, and associated butt welds in the SW System that are accessible for flaw characterization; or, as an alternative, the provisions of ASME Code Case N-513 will apply except as modified below. This request for relief does not include socket welds or sections of piping inaccessible for flaw characterization.

Flaws will be replaced within 18 months from the time of discovery to coincide with an appropriate SW header outage.

ATTACHMENT 1

List of drawings containing the SW System and the associated line number designations for pipe class 153A and 163.

11715-CBB-040D-3, SHEET 2

1 1/4"- WS-H78-153A-Q3
1 1/4"-WS-H81-153A-Q3

DRAWING 11715-CBM-078A-3, SHEET 1

3/4"-WS-H77-163-Q3
3/4"-WS-930-163-Q3
4"-WS-H76-163-Q3
8"-WS-93-163-Q3

DRAWING 11715-CBM-078A-3, SHEET 4

8"-WS-515-163-Q3
8"-WS-516-163-Q3
4"-WS-H48-163-Q3
4"-WS-H50-163-Q3
3/4"-WS-H67-163-Q3
3/4"-WS-H66-163-Q3
3/4"-WS-H55-163-Q3
3/4"-WS-H62-163-Q3
3/4"-WS-H61-163-Q3
3/4"-WS-H65-163-Q3
8"-WS-513-163-Q3
8"-WS-514-163-Q3
3/4"-WS-H54-163-Q3
3/4"-WS-H52-163-Q3
3/4"-WS-H53-163-Q3
4"-WS-H51-163-Q3
3/4"-WS-H60-163-Q3
4"-WS-H59-163-Q3
3/4"-WS-H63-163-Q3

DRAWING 11715-CBM-078B-3, SHEET 3

1 1/2"-WS-724-163-Q3
1 1/2"-WS-726-163-Q3
1"-WS-729-163-Q3
1"-WS-731-163-Q3
1"-WS-725-163-Q3
1"-WS-727-163-Q3
1"-WS-935-163-Q3
1"-WS-936-163-Q3
1"-WS-933-163-Q3
1"-WS-934-163-Q3
1 1/2"-WS-729-163-Q3
1 1/2"-WS-731-163-Q3
1 1/2"-WS-725-163-Q3
1 1/2"-WS-728-163-Q3
1 1/2"-WS-730-163-Q3
1 1/2"-WS-727-163-Q3

DRAWING 11715-CBM-078C-3, SHEET 2

1"-WS-487-163-Q3
1"-WS-491-163-Q3
1"-WS-489-163-Q3

DRAWING 11715-CBM-078C-3, SHEET 2, CONTINUED

1"-WS-488-163-Q3
1"-WS-490-163-Q3
1"-WS-492-163-Q3
2"-WS-772-163-Q3
3/8"-WS-914-163-Q3
3/8"-WS-916-163-Q3
3/4"-WS-400-163-Q3
2"-WS-775-163-Q3
3/8"-WS-915-163-Q3
3/4"-WS-913-163-Q3
3/4"-WS-733-163-Q3
3/8"-WS-910-163-Q3
2"-WS-776-163-Q3
3/8"-WS-912-163-Q3
3/4"-WS-774-163-Q3
3/8"-WS-913-163-Q3
3/4"-WS-779-163-Q3
3/4"-WS-909-163-Q3

DRAWING 11715-CBM-078G-3, SHEET 2

2"-WS-949-153A-Q3
1 1/2"-WS-965-153A-Q3
3/4"-WS-934-153A-Q3
3/4"-WS-940-153A-Q3
1 1/2"-WS-982-153-Q3
3/4"-WS-937-153A-Q3
2"-WS-947-153-Q3
1 1/2"-WS-963-153A-Q3
2"-WS-946-153A-Q3
1 1/2"-WS-978-153A-Q3
2"-WS-945-153A-Q3
1 1/2"-WS-961-153A-Q3
1 1/2"-WS-975-153A-Q3
2"-WS-950-153A-Q3
1 1/2"-WS-981-153A-Q3
2"-WS-955-153A-Q3
2"-WS-948-153A-Q3
1 1/2"-WS-976-153A-Q3
3/4"-WS-943-153A-Q3
2"-WS-954-153A-Q3
1 1/2"-WS-977-153A-Q3
2"-WS-953-153A-Q3
1 1/2"-WS-979-153A-Q3
2"-WS-952-153A-Q3
1 1/2"-WS-980-153A-Q3
2"-WS-944-153A-Q3
1 1/2"-WS-971-153A-Q3
2"-WS-951-153A-Q3

End of Relief Request NDE-009

RELIEF REQUEST NDE-010

I. IDENTIFICATION OF COMPONENTS

Class 1, 2, and 3 repaired or replaced components and their supports

II. CODE REQUIREMENTS

Articles IWA-4000 and IWA-6000 of Section XI, 1995 Edition with addenda up to and including the 1996 Addenda, require the Owner to prepare and submit the "Form NIS-1 Owner's Report for Inservice Inspection" and "Form NIS-2 Owner's Report for Repair /Replacement Activity".

III. BASIS FOR PROPOSED ALTERNATIVE

NAPS 2 proposes to implement as part of its third interval inspection ISI Plan Code Case N-532, "Alternative Requirements to Repair and Replacement Documentation Requirements and Inservice Summary Report Preparation and Submission as Required by IWA-4000 and IWA-6000" as an alternative to the Section XI Code requirements referenced above. NAPS 2 has reviewed both the requirements of the Section XI Code and Code Case N-532 and has determined the Code Case provides an adequate level of quality and safety as required by 10CFR50.55a(3)(i). This conclusion is based on the following;

1) Code Case N-532 does not change or alter the Section XI requirement that each repair/replacement activity shall be reviewed by the Authorized Nuclear Inservice Inspector (ANII). This is a review performed by a qualified inspector, knowledgeable in the requirements of Section XI. The objective of this review, i.e. an independent review by a party other than the Owner to assure compliance with Section XI requirements, is not changed by the Code Case. The NIS-2 submittal does not provide any information to verify that the repair/replacement activity was performed in accordance with Section XI other than some hydrostatic test parameters and the use of certain Code Cases. This is only a small amount of the information needed to verify Code compliance of a repair/replacement activity. Additionally, no information on repair/replacement activities of Class 3 components is required to be submitted. Therefore, the review by the ANII is the primary third party assurance activity associated with all repair/replacement activities.

2) Code Case N-532 does not change the requirement that the documentation associated with a repair/replacement activity required by Section XI and the Owner's Quality Assurance Program be maintain at the site for review by the NRC and/or representatives of the Owner or personnel from other appropriate organizations.

3) Code Case N-532 does not change the Owner's commitments to maintain an affective in-process quality assurance program to control applicable aspects of the repair/replacement activity under Appendix B to 10CFR50.

4) Code Case N-532 does require an abstract for repairs, replacements and corrective measures performed, even though the discovery of the flaw or relevant condition that necessitated the repair/replacement activity may not have resulted from an examination or test required by Section XI. This provides a significant improvement in reporting requirements associated with repair/replacement activities and should provide more meaningful information to the representatives who do not have immediate access to the full body of documentation available at the site.

5) Code Case N-532 no longer requires that the examinations completed be reported examination by examination as required by Section XI. However, evidence of these examinations are maintain as required by Section XI and the records retention requirements of the Owner's quality assurance program. These records are available for review by the ANII, NRC, and representatives of other appropriate organizations. Code Case N-532 does require that a status report be provided by examination category. This "status report" provides a more meaningful and comprehensive assessment of the program's status than what is currently required.

6) Code Case N-532 does allow the report interval to be based on an inspection period basis as opposed to each fuel cycle. This would change the reporting frequency for NAPS 2 from six times in the inspection interval to three. However, the NIS-1 and NIS-2 reports are not intended to provide timely notification of activities to regulators of industry events. Rather these currently required reports are summary reports of normal ISI activities. All other reporting commitments of North Anna remain unaffected by the use of this Code Case.

The use of Code Case N-532 was previously approved by the NRC for Wolf Creek Generating Station in a letter dated February 9, 1996. The safety evaluation included in the NRC approval letter noted a clarification to the term "corrective measures". It was noted that one use of the term involves Code required activities such as repair and replacement. The other use of the term involves maintenance activities such as tightening threaded fittings to eliminate leakage, torquing of fasteners to eliminate leakage at bolted connections, replacing valve packing due to unacceptable packing leakage, tightening loosened mechanical connections on supports, adjusting and realignment of supports, cleanup of corrosion on components from leakage, etc. It is our intent to use the same clarification proposed and accepted for Wolf Creek Generating Station, i.e. the first use of the term above to reference repair/replacement activities. The term will not apply to the second use of the term addressing normal maintenance activities that are not considered repair/replacement activity.

A similar relief request was approved for North Anna Unit 1 for the third interval inspection ISI Program and for the NAPS 2 second interval inspection ISI Program by letter dated by letter dated October 6, 2000.

IV. ALTERNATE PROVISIONS

As an alternative to the requirements of IWA-4000 and IWA-6000, in accordance with 10CFR50.55a(3), NAPS 2 proposes to use Code Case N-532, with the clarification of the term "corrective action" as discussed in Section III, in the implementation of its Section XI third interval inspection ISI Plan.

End of Relief Request NDE-010

RELIEF REQUEST NDE-011

I. IDENTIFICATION OF COMPONENTS

Class 1, 2, and 3 components and their associated supports.

II. CODE REQUIREMENTS

Section XI 1995 Edition with addenda up to and including 1996 Addenda, IWA-4440 (a) requires "All welding shall be performed in accordance with Welding Procedure Specifications that have been qualified by the Owner or Repair/Replacement Organization in accordance with the requirements of codes specified in the Repair/Replacement Plan."

III. BASIS FOR PROPOSED ALTERNATIVE

NAPS 2 proposes to use Code Case N-573, "Transfer of Procedure Qualification Records Between Owners," as an alternative to the requirements of IWA-4440 (a) applicable to the Owner. The Code Case has been reviewed and determined to provide an acceptable level of quality and safety based on the following elements of the Code Case:

1) Code Case N-573 places certain responsibilities on the Owners involved with the transfer of the PQR (Performance Qualification Record). The term "Owner" is a specific term used by Section XI to identify "the organization legally responsibility for the construction and /or operation of a nuclear facility..." (IWA-9000). Therefore the organizations involved with the transfer of the PQR have been determined to be competent in the requirements associated with nuclear power industry and the responsibilities associated with their actions.

2) Code Case N-573 allows NAPS 2 to receive a PQR only from the Owner that performed the procedure qualification testing to the requirements of Section XI.

3) Code Case N-573 requires the PQR to have been qualified to the requirements of Section XI; specifically including the Quality Assurance Program requirements of IWA-1400.

4) Code Case N-573 requires NAPS 2 to accept responsibility for the use of PQR and assure that each resulting WPS (Welding Procedure Specification) has the parameters applicable to welding documented on the WPS.

5) Code Case N-573 requires NAPS 2 to demonstrate technical competence in application of the received PQR by completing a performance qualification test using the parameters of a resulting WPS.

6) Code Case N-573 does not alter the commitments NAPS 2 to complete all welding based on the transferred PQR in full compliance with the requirements of its Quality Assurance Program and other applicable requirements of Section XI.

IV. ALTERNATE PROVISIONS

In accordance with the provisions of 10CFR50.55a(3), NAPS 2 requests approval to use the provisions of Code Case N-573, "Transfer of Procedure Qualification Records Between Owners," approved March 12, 1997 by Section XI.

End of Relief Request NDE-011

RELIEF REQUEST NDE-012

I. IDENTIFICATION OF COMPONENTS

Class 1, 2, and 3 piping components, and supports.

II. CODE REQUIREMENTS

Section XI 1995 Edition with addenda up to and including the 1996 Addenda, paragraphs IWB-2430(a), IWC-2430(a), and IWD-2430(a) provide requirements for additional examinations based on the conditions "of similar material and service." IWF-2430(a) provides requirements for additional examinations based on the conditions "of similar type and function".

III. BASIS FOR PROPOSED ALTERNATIVE

The above Code requirements do not include the root cause or other similar relevant conditions in the basis of the selections for the initial scope of additional examinations resulting from a failure. The expansion is based on the fact that a failure has occurred and the selection is limited only by elements of similarity to the failed component in design and service. The current expansion criteria do not assure that the most likely piping segments, component, or supports to have a similar failure are selected for examination. Code Case N-586, "Alternative Additional Examination Requirements for Class 1, 2, and 3 Piping, Components, and Supports," dated February 26, 1999, provides an alternative basis for selecting the additional components to be examined that provides an acceptable level of quality and safety. This alternative requires that an engineering evaluation be performed to determine the following:

1) The root cause of the failure or other relevant conditions,

2) The applicable service conditions and degradation mechanism to establish that the affected welds, areas, or supports will perform their intended safety function during subsequent operation, and

3) The additional welds, areas, or supports, subject to the same root cause conditions or degradation mechanisms.

Based on the determinations of the engineering evaluation, Code Case N-586 requires that a sample of welds, areas, or supports up to the number required by the referenced Code paragraphs be selected for examination. The number of items will be less than the number required by Section XI only if the total population of welds, areas, or supports determined by the engineering evaluation is less than the number required to be selected by Section XI. No additional examinations are required if the engineering evaluation concludes that either:

1) there are no additional welds, areas, or supports subject to the same root cause conditions, or

2) no degradation mechanisms exists.

The use of the Code Case provides a performance-based approach to the selection of items for additional examinations. This approach is more likely to lead to examination of the complete set of items potentially affected by the involved degradation mechanism than the more random selection approach now required by Section XI. However, the Code Case saves the additional cost and radiation exposure associated with an expansion because of an isolated failure related to only one item or a small number of items.

IV. ALTERNATE PROVISIONS

NAPS 2 requests approval in accordance with 10CFR50.55a(3) to be allowed to use Code Case N-586, "Alternative Additional Examination Requirements for Class 1, 2, and 3 Piping, Components, and Supports," dated February 26, 1999, in the implementation of its third interval inspection period.

End of Relief Request NDE-012

RELIEF REQUEST NDE-013

I. IDENTIFICATION OF COMPONENTS

Class 1, 2 and 3 piping, components and supports

II. CODE REQUIREMENTS

Section XI 1995 Edition with addenda up to and including the 1996 Addenda, Tables IWB-2412-1, IWC-2412-1, IWD-2412-1, and IWF-2410-2 establish the maximum and minimum percent of items for each examination category to be completed each inspection period, except as modified by associated paragraphs of Section XI. Additionally, paragraphs IWB-2420(a), IWC-2420(a), IWD-2420(a), and IWF02420(a) require "the sequence of component examinations that was established during the first inspection interval shall be repeated during each successive inspection interval, to the extent practical."

III. BASIS FOR PROPOSED ALTERNATIVE

The reference tables establish both a minimum and maximum percent complete which allows more examinations to be performed in the second and third inspection periods. Only 34% of the examinations can be performed in the first inspection period while as much as 50% can be performed in either the second or third inspection period. However, a minimum of 16% must be performed in any one-inspection period. Code Case N-598, "Alternative Requirements to Required Percentages of Examination," dated March 2, 1998, provides alternative examination percentages that allow more flexibility in scheduling of examinations to avoid unnecessary expenditure of both manpower and exposure. It changes the Section XI requirements by allowing more examinations to be performed in the first inspection period than the present requirements. The flexibility to perform more examinations in the second or third inspection period is still maintained by the Code Case. Also, the Code Case still maintains the 16% minimum in an inspection period. The IWX-2420 (a) paragraphs are generally interpreted as requiring the examinations be performed within approximately 10 years of the previous examination. The application of the Code Case in conjunction with the objectives of the referenced IWX-2420 (a) paragraphs would allow the flexibility to bring an examination forward into an earlier inspection period. This action would reestablish the examination schedule of the component, but in a manner that does not impact on the quality or safety afforded to the plant by the examination, because the duration between examinations would be less than 10-years. Therefore, the proposed alternative will provide an acceptable level of quality and safety as required by 10CFR50.55a(3) and affords the Owner more opportunity in scheduling examinations to optimize the costs and minimize radiation exposure.

IV. ALTERNATE PROVISIONS

NAPS 2 proposes to be allowed to use the requirements of Code Case N-598, "Alternative Requirements to Required Percentages of Examination," dated March 2, 1998. NAPS 2 will assure that the implementation of the Code Case will not result in the duration of time between the examination of a pipe, component, or support in the previous inspection interval and the third inspection interval exceeding 10 years, to the extend practical.

End of Relief Request NDE-013

RELIEF REQUEST NDE-014

I. IDENTIFICATION OF COMPONENTS

Class 2 and 3 carbon and low-alloy steel piping components subject to wall thinning as a result of flow-accelerated or other corrosion phenomena.

II. CODE REQUIREMENTS

ASME Boiler and Pressure Vessel Code, Section XI, 1995 Edition with addenda up to and including the 1996 Addenda, IWA-4000, provides the process for assessing a component for continued service after a defect has been removed. This provision stipulates that where the section thickness has been reduced below the minimum design thickness, the component shall be repaired. As an alternative, the component may be evaluated and accepted in accordance with the design rules of either the Construction Code or ASME Section III.

III. BASIS FOR PROPOSED ALTERNATIVE

Code Case N-597, "Requirements for Analytical Evaluation of Pipe Wall Thinning," dated March 2, 1998, Section XI, Division 1, provides an acceptable approach for determining the structural integrity of components degraded by wall thinning as a result of flow-accelerated or other corrosion phenomena. The methodology specified in the code case is sufficiently conservative, and thus provides an adequate margin of safety for evaluating a component's structural integrity. Maintaining the option of using Code Case N-597 will facilitate the scheduling of the replacement of components degraded by wall thinning as a result of flow-accelerated or other corrosion phenomena.

IV. ALTERNATIVE PROVISIONS

As an alternative to the requirements of IWA-4000, we propose to establish the option of using ASME Code Case N-597, which permits carbon and low-alloy steel piping components subjected to wall thinning as a result of flow-accelerated or other corrosion phenomena to be evaluated and accepted in accordance with an alternative set of design rules to those contained in the Construction Code or ASME Section III.

Further, procedural controls are currently in place in the Virginia Electric and Power Company (Dominion) Flow-Accelerated Corrosion Program that provide direction for calculating wear rates, forecasting remaining life, and conducting inspections of piping components susceptible to FAC. The methodology employed is consistent with EPRI's NSAC-202L-R2, "Recommendations for an Effective Flow-Accelerated Corrosion Program," and incorporates the pertinent NSAC-202L-R2 recommendations for calculating wear rates, forecasting

remaining life, and conducting inspections as programmatic requirements.

For example, if the evaluation of ultrasonic test (UT) data for a component determines that significant wall thinning has occurred, additional data acquisition shall be performed (including UT grid refinement and/or scans) to further establish that the lowest wall thickness has been measured. After the additional UT data have been obtained, wear rates are calculated and the remaining wall thickness is projected for the end of the next fuel cycle. The projected remaining wall thickness is then analyzed in accordance with Code Case N-597, and a schedule for future component replacement is determined. The component will be inspected during each subsequent refueling outage until it is replaced consistent with the schedule determined by the Code Case N-597 evaluation.

The NRC has previously approved the use of Code Case N-597 for Hope Creek and Salem Nuclear Generating Stations in a letter dated October 12, 2000 (TAC Nos. MA8595, MA8600 and MA8601).

End of Relief Request NDE-014

RELIEF REQUEST NDE-015

I. IDENTIFICATION OF COMPONENTS

Class 1 Clad-to-Base Metal Interface of the Reactor Vessel

II. CODE REQUIREMENTS

Section XI 1995 Edition with addenda up to and including the 1996 Addenda, Appendix VIII, Supplement 4, paragraph 3.2(c) provides a basis for acceptance of the testing to demonstrate sizing ability based on 1) a linear regression line of not less than 0.7; 2) a mean deviation of flaw depth of less than 0.25-inch and 3) a correlation coefficient of not less than 0.70.

III. BASIS FOR PROPOSED ALTERNATIVE

The current requirements of the referenced subparagraph 3.2(c) contains requirements for statistical parameters that have been identified as being inconsistent with the PDI effort. Code Case N-622, "Ultrasonic Examination of RPV and Piping, Bolts, and Studs", dated February 26, 1999, Appendix IV, paragraphs 3.2(a) and 3.2(b) offers the use of RMS error calculations in lieu of the statistical parameters specified in Section XI. These alternative requirements have been approved and published by Section XI as acceptable and have been determined by the Performance Demonstration Initiative (PDI) as providing an acceptable level of quality and safety. The PDI is a joint effort of the Electric Power Research Institute and the nuclear power plant owners in the United States (and some foreign utilities). These organizations work jointly under the PDI charter to review the capabilities of the technology and the objectives of the Section XI; and to develop examination techniques and procedures that provide for meaningful implementation. Virginia Electric Power Company (Dominion) as a part of the PDI effort concurs in the acceptability of the alternative requirements. As such the alternative requirements are proposed as satisfying the requirements of 10 CFR 50.55a (a)(3) (i).

A similar request for relief was approved for use for NAPS 2 as part of the second inspection interval by NRC letter dated April 11, 2001, TAC Numbers MB0476 through MB0480.

IV. ALTERNATE PROVISIONS

As a alternative to the referenced Section XI requirements, NAPS 2 will implement the requirements of Code Case N-622, "Ultrasonic Examination of RPV and Piping, Bolts, and Studs," dated February 26, 1999, Appendix IV, paragraphs 3.2 (a) and 3.2 (b) as "sizing acceptance criteria" for the Appendix VIII demonstrations associated with clad-to-base metal interface testing of the reactor vessel.

End of Relief Request NDE-015

Section 2.5

RELIEF REQUESTS FOR SYSTEM PRESSURE TESTING

RELIEF REQUEST SPT-001

I. IDENTIFICATION OF COMPONENTS

Class 1 pressure retaining components.

II. IMPRACTICAL CODE REQUIREMENTS

Section XI, 1995 Edition with addenda up to and including the 1996 Addenda requires the following:

1) Table IWB-2500-1, Category B-P requires that all Class 1 pressure retaining components receive a system leakage test each refueling outage. Note (2) of the table states "The system leakage test (IWB-5220) shall be conducted prior to plant startup following each reactor refueling outage."

2) IWB-5220 (a) requires, "The system leakage test shall be conducted at a pressure not less than nominal operating pressure associated with normal system operation."

3) IWA-2211 (b) by reference to Table IWA-2210-1 requires the "maximum examination distance (*as allowed by Table IWA-2210-1*) shall apply to the distance from the eye to the surfaces being examined." The maximum distance allowed by Table IWA-2210-1 is six feet.

III. BASIS FOR RELIEF

NAPS 2 is designed with a sub-atmospheric containment. The Class 1 system leakage test is performed during Mode 3. The plant's Technical Specifications require the sub-atmospheric conditions to exist when the plant is in Mode 3. The sub-atmospheric requirements create conditions that require the use of self-contained breathing apparatus by anyone required to be in the containment. In order to comply with the requirements of IWA-2211 (b) it will be necessary to leave scaffolding in place to be able to access, within six feet, all surfaces that require examination. The use of scaffolding would only allowed in containment during Mode 3 if it has been designed and erected to withstand the design seismic event without causing damage to safety related equipment. The design of the scaffolding, installation at the end of one outage, and then disassembly at the beginning of the next refueling outage only to start the installation process over at the end of that outage is impractical.

To leave the scaffolding in place until the Class 1 system leakage test is completed and then remove it before proceeding with startup is also impractical. Because of the

sub-atmospheric containment, it would be necessary to either bring the unit back to Cold Shutdown, Mode 5 or attempt to remove the scaffolding using self-contained breathing apparatus, which would be an extreme burden for the personnel involved.

IV. ALTERNATE PROVISIONS

NAPS 2 will perform the Class 1 system leakage test without the erection of temporary scaffolding to satisfy the requirement of Table-2210-1 to be within 6 feet of the surface to be examined. As an alternative, existing permanent structures, platforms or ladders will be used to the extent practical to gain access to the surface to be examined. The required visual examination will be performed from the access afforded by these structures, ladders or platforms to the extent practical. Any examination surface that cannot be accessed per the requirements of Table-2210-1 will be considered "inaccessible". As such the surrounding area (including floor areas or equipment surfaces located underneath the inaccessible components) will be examined for leakage as required by IWA-5241 (b).

End of Relief Request SPT-001

RELIEF REQUEST SPT-002

I. IDENTIFICATION OF COMPONENTS

Drawing #	Line #	Class
12050-CBM-093A, Sheet 3	1"-RC-644-1502-Q2	1
	1"-RC-645-1502-Q2	1

These lines are located between the reactor head vent isolation valves 2-RC-SOV-201A1 and 201A2, and 2-RC-SOV-201B1 and 201B2. Each line is approximately 1.5 feet in length. Refer to Figure SPT-002-1.

II. IMPRACTICAL CODE REQUIREMENTS

Section XI, 1995 Edition with addenda up to and including the 1996 Addenda, Examination Category B–P, Items B15.50 and B15.70 require system hydrostatic testing and associated VT–2 visual examination of all Class 1 pressure retaining piping and valves.

IV. BASIS FOR RELIEF

Relief is requested from performing Section XI required system hydrostatic testing and associated VT–2 visual examination on the identified components.

These piping segments are equipped with valves that provide for double isolation of the reactor coolant system (RCS) pressure boundary. The valves are generally maintained closed during normal operation and the piping outboard of the first isolation valve is, therefore, not normally pressurized. The non–isolable, upstream portions of the RCS piping (lines 1"-RC-642-1502-Q1 and 1"-RC-643-1502-Q1) will be pressurized using RCS pressure and visually examined as required.

Opening the inboard isolation valves during the inspection of the upstream piping would pressurize lines 1"-RC-644-1502-Q2 and 1"-RC-645-1502-Q2. However, the inboard isolation valves should not be opened while the RCS is pressurized. Opening these valves could release reactor coolant into the reactor vessel refueling cavity. Stroking of the inboard valves has been performed while the RCS was pressurized. This test revealed that when the upstream valve was stroked, the downstream valve tended to lift due to the motive force of the steam. As long as the inboard and outboard valves remain closed under RCS pressure, they are an effective isolation boundary.

However, these valves should not be stroked for reasons of routine operation while the RCS is pressurized.

The lines could be pressurized from the end of the discharge piping (1"-RC-646-1502) that leads to the refueling cavity using a pressure test pump. However, the burden of performing this hydrostatic test is not justified by a corresponding increase in safety.

Only a small portion of the ASME Code classed vent line will be excluded from hydrostatic testing. Each pipe section between the isolation valves is approximately 1.5 feet in length. Also, a stress analysis review was performed on the two pipe sections. The review revealed that these lines are subject to stresses well below the applicable code allowable stresses. The lines have adequate flexibility to accommodate large differential displacement. A review of the support loads showed that these loads are small and within the design loads for the supports.

ASME Section XI Code, paragraph IWA–4540, provides the requirements for hydrostatic pressure testing of piping and components after repairs by welding to the pressure boundary. IWA–4500(b)(5) excludes component connections, piping, and associated valves that are 1 inch nominal pipe size and smaller from the hydrostatic test. Consequently, hydrostatic testing and the associated visual examination of these $\leq$ 1 inch diameter RCS pipes and valve bodies once each 10–year interval is unwarranted considering that a repair weld on the same connections is exempted by the ASME XI Code.

A similar relief request was approved for North Anna Unit 2 for the second interval inspection ISI Program by letter dated March 21, 2001, under TAC NO. MB0361.

V. ALTERNATE PROVISIONS

As an alternative to Section XI required hydrostatic test of the subject Class 1 reactor vessel vent piping the following is proposed:

1. The reactor vessel vent piping will be visually examined for leakage, and any evidence of past leakage, with the isolation valves in the normally closed position each refueling outage during the ASME XI Class 1 System Leakage Test (IWB–5220).

2. The reactor vessel vent piping will also be visually examined with the isolation valves in the normally closed position during the 10–year ISI system pressure test. This examination will be performed with the RCS at nominal operating pressure and at near operating temperature after satisfying the required 4–hour hold time.

3) The surveillance requirements of Technical Specifications that determine the reactor coolant system leak rate and the containment atmosphere radioactivity will be satisfied.

These proposed alternatives will ensure that the overall level of plant quality and safety will not be compromised.

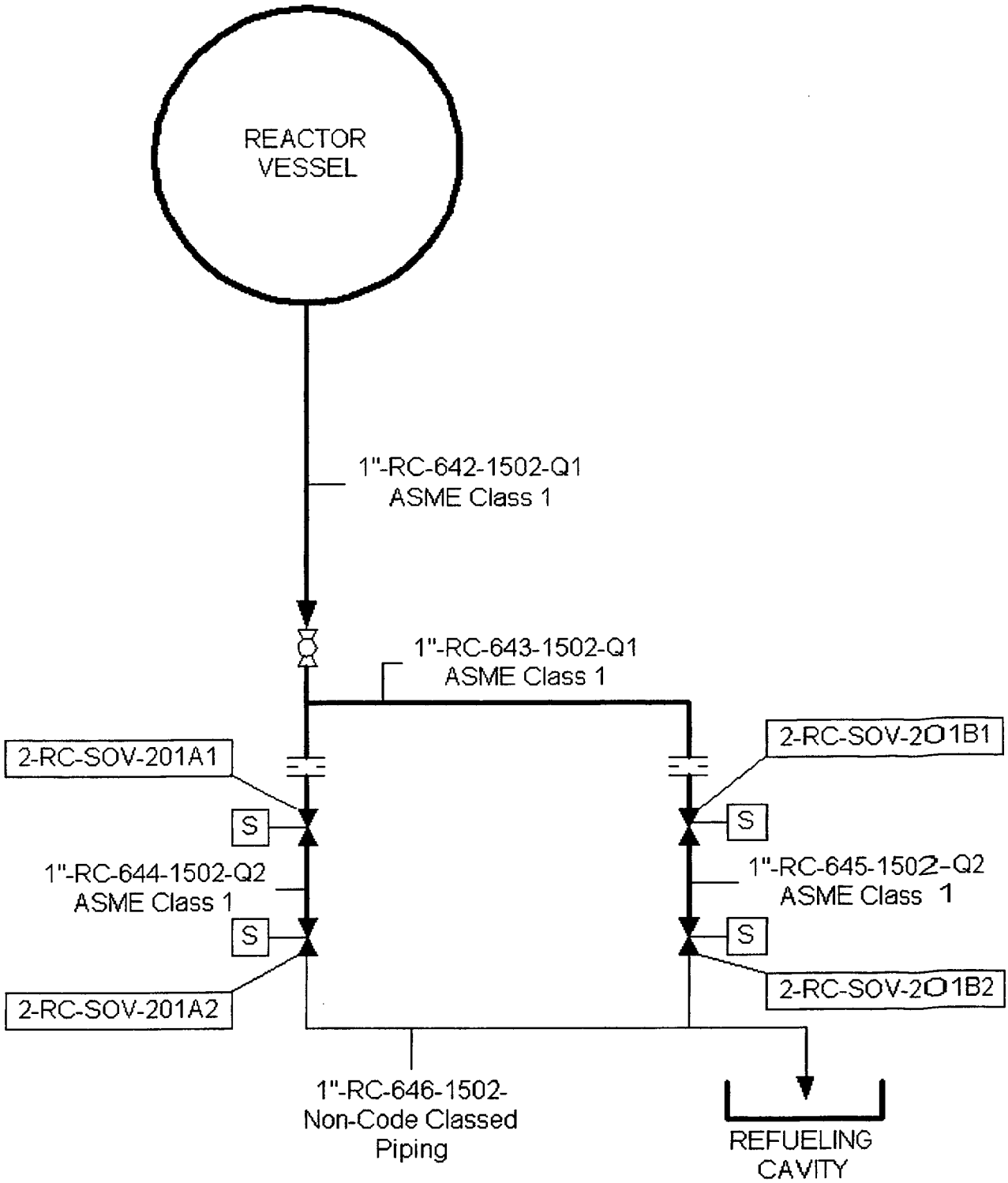

Figure SPT-002-1

End of Relief Request SPT-002

RELIEF REQUEST SPT-003

I. IDENTIFICATION OF COMPONENTS

Pressure retaining bolted connections within the scope of ASME Section XI.

II. CODE REQUIREMENTS

Section XI 1995 Edition with addenda up to and including the 1996 Addenda, paragraph IWA-5250(a)(2)(b) requires, in part, that "if leakage occurs at a bolted connection on other than a gaseous system, one of the bolts shall be removed, VT-3 examined, and evaluated in accordance with IWA-3100."

III. BASIS FOR PROPOSED ALTERNATIVE

Section XI requires the bolting to be removed and evaluated even if sufficient evidence exist to support the conclusion that the involved bolting has not been harmed by the leakage. Such factors as the age of the bolts or the susceptibility of the bolting material to corrosion by the leaking liquid may not be used to justify leaving bolting material in service without further examination. Code Case N-566-1, "Corrective Action for Leakage Identified at Bolted Connections," dated February 15, 1999, used in lieu of the Section XI requirements would allow greater flexibility and prudent decision making. Leaking conditions at a bolted connection may be an important factor in the degradation of bolting. However, the removal of bolting unnecessarily may result in the damaging of sound bolting, the exposure of personnel to radiation, and the expenditure of resources for no gain in safety. Code Case N-566-1 provides a basis for the determining the acceptability of bolting based upon several factors including material, leaking medium, duration of the leak, general corrosion of the connection and the impact of such leakage on the system. An analysis to determine the need to remove a bolt for examination prior to any action to remove the bolting is required by Code Case N-566-1. This is an alternative to the requirements of Section XI that provides an acceptable level of quality and safety.

A similar relief request was approved for North Anna Unit 1 for that unit's third interval inspection ISI Program by letter dated April 25, 2000, under TAC NO. MA5750.

IV. ALTERNATE PROVISIONS

NAPS 2 requests approval in accordance with 10CFR50.55a (3) to use Code Case N-566-1, "Corrective Action for Leakage Identified at Bolted Connections," dated February 15, 1999, as part of its third inspection interval.

End of Relief Request SPT-003

RELIEF REQUEST SPT-004

I. IDENTIFICATION OF COMPONENTS

Class 3 pressure retaining components and piping.

II. IMPRACTICAL CODE REQUIREMENTS

Section XI, 1995 Edition with addenda up to and including the 1996 Addenda, Table IWD-2500-1, Category D-B, Item Numbers D2.20, D2.40. D2.60 and D2.80 requires a system hydrostatic test in accordance with IWD-5222 be performed once in the inspection interval. IWD-5222 requires the test pressure to be greater than the normal operating pressure.

III. BASIS FOR RELIEF

This request of relief asks that the test pressure be reduced to the normal operating pressure for Class 3 components.

Section XI determined that the over pressurization requirements of earlier Code editions were excessive and issued Code Case N-498 in various revisions to eliminate the over pressurization requirement. The NRC agreed with the position taken by Code Case N-498 -1, "Alternative Rules for 10-Year System Hydrostatic Testing for Class 1, 2, and 3 Systems," dated May 11, 1994. Code Case N-498 -1 is currently identified for use in the latest revision of Regulatory Guide 1.147. However, the Code Case N-498 -1 addresses all three classes of components. Section XI, 1995 Edition with 1996 Addenda, has incorporated the reduced pressure requirements of the Code Case for Class 1 and 2 items, but failed to do so for Class 3 items. A later revision to Section XI eliminated the over pressurization requirements for Class 3 items.

To continued to perform the over pressurization testing of Class 3 components as part of the third inspection interval is considered impractical as both the industry and the NRC have agreed that the benefit to safety does not merit the effort to perform the test at the elevated pressure. The alternative testing proposed in the following paragraph of this request for relief is the same as that required for Class 3 items by Code Case N498 -1. To propose these requirements outside of the Code Case allows the aspects of the Code Case to be applied to the Class 3 components only. It does not cause the need to request the use of only part of the Code Case or to correct what are now incorrect references to specific Section XI requirements (For example, only Examination Category D-A now states system pressure testing requirements for Class 3 components.)

IV. ALTERNATE PROVISIONS

NAPS 2 proposes to use the following requirements as part of its third interval inspection ISI Plan for the testing of Class 3 components and piping as opposed to the requirements of Section XI referenced in Section II of this request.

1) A system pressure test shall be conducted at or near the end of the inspection interval;

2) The boundary subject to test pressurization during the system pressure test shall extend to all Class 3 components included in those portions of systems required to operate or support the safety system function up to and including the first normally closed valve, including a safety or relief valve, or valve capable of automatic closure when the safety function is required;

3) Prior to performing the VT-2 visual examination, the system shall be pressurized to nominal operating pressure for at least 4 hours for insulated systems and 10 minutes for non-insulated systems. The system shall be maintained at nominal operating pressure during performance of the VT-2 visual examination; and

4) The VT-2 visual examination shall include all components within the boundary identified in 2) above.

5) Test instrumentation requirements of IWA-5260 are not applicable.

End of Relief Request SPT-004

RELIEF REQUEST SPT-005

I. IDENTIFICATION OF COMPONENTS

System: Reactor Coolant (RC)

Components: Partial Penetration Welds at the Bottom of the Reactor Vessel

II. IMPRACTICAL CODE REQUIREMENTS

Section XI of the ASME Boiler and Pressure Vessel Code, 1995 Edition with Addenda up to and including the 1996 Addenda, Category B-P, Item No. B15.10, requires a visual (VT-2) examination of the bottom of the reactor vessel during the system leakage test of IWB-5220.

III. BASIS FOR RELIEF

In order to meet the Section XI pressure and temperature requirements for the system leakage tests of the reactor vessel, the reactor containment at NAPS 2 is required to be at a sub-atmospheric pressure. Station administrative procedures require that self-contained breathing apparatus be worn for containment entries under these conditions. This requirement significantly complicates the visual (VT-2) examination of the bottom of the reactor vessel during testing. Access to the bottom of the reactor vessel requires that the examiner to descend several levels by ladder and navigate a small entrance leading to the reactor vessel. In addition to these physical constraints, the examiner must contend with extreme environmental conditions: elevated air temperatures due to reactor coolant at temperatures above 500 degrees F and limited air circulation in the vessel cubicle. Also, the examiner is limited to the approximate 30-minute capacity of the breathing apparatus for containment entry, the VT-2 examination, and containment exit.

A similar relief request was approved for North Anna Unit 1 for that unit's third interval inspection ISI Program by letter dated April 25, 2000, under TAC NO. MA5750.

IV. ALTERNATE PROVISIONS

Technical Specifications have surveillance requirements that monitor leakage and radiation levels. The applicable Technical Specification requirements will be satisfied through the third inspection interval. The incore sump room has a level alarm in the control room requiring operator action.

These actions would identify any integrity concerns associated with this area.

A VT-2 visual examination will be conducted when containment is at atmospheric conditions each refueling outage for evidence of boric acid corrosion.

End of Relief Request SPT-005

RELIEF REQUEST SPT-006

I. IDENTIFICATION OF COMPONENTS

Class 1, 2, and 3 bolted connections is system borated for the purpose of controlling reactivity.

II. CODE REQUIREMENTS

Section XI 1995 Edition with addenda up to and including the 1996 Addenda, paragraph IWA-5242 (a) states in part that "For systems borated for the purpose of controlling reactivity, insulation shall be removed from pressure retaining bolted connections for VT-2 visual examinations..."

III. BASIS FOR PROPOSED ALTERNATIVE

The ASME Section XI Subcommittee has approved and published Code Case N-533-1, "Alternative Requirements for VT-2 Visual Examination of Class 1, 2, and 3 Insulated Pressure Retaining Bolted Connections," dated February 26, 1999. This Code Case provides an alternative to the requirements of IWA-5242 (a) that allows for the removal insulation and examination of the bolted connections without the connection being pressurized. It also requires a system pressure test and associated VT-2 examination without the removal of insulation. The method proposed by the Code Case is well suited to the examination of borated system in that boron that leaks out of the system leaves easily detectable residue. Therefore it will be easily detected by a VT-2 visual examination. Because the use of this Code Case is requested for borated systems, North Anna Power Station has determine that it provides an acceptable level of quality and safety.

The use of this Code Case is considered to be necessary by North Anna Power Station, because the majority of involved bolted connections are located inside containment, and potentially in high radiation areas. Additionally, many of the connections are required to be assessed by the Class 1 system leakage test conducted at Mode 3 as part of the start up testing following a refueling. NAPS 2 is required by Technical Specifications to be at sub-atmospheric conditions at this time. Because of the sub-atmospheric condition any personnel inside containment must wear self-contained breathing apparatus. This would make the tear down and removal of scaffolding a task of significant hardship, one that provides essentially no gain in safety if the proposed alternative is utilized. (The scaffolding is required to gain access to the bolted connections and to reinstall the insulation after completion of the test.) Secondly, most of the involved connections are tested at elevated temperatures. The actions necessary to protect the personnel who must re-installed insulation on these connections and remove scaffolding in the proximity of these connections represent another hardship with little or no justification from gains in safety.

IV. ALTERNATE PROVISIONS

NAPS 2 requests approval, as allowed by 10CFR50.55a (3), to use Code Case N-533-1, "Alternative Requirements for VT-2 Visual Examinations of Class 1, 2, and 3 Insulated Pressure-Retaining Bolted Connections," dated February 26, 1999, as an alternative to the requirements of IWA-5242 (a) related to bolted connections in system borated for the purpose controlling reactivity. In addition to complying with the requirements of paragraphs (a) and (b) of Code Case N-533-1, North Anna Power Station will also assure that a 4 hour hold time is required as part of the system pressure test required by paragraph (a) before the VT-2 visual examination is performed.

End of Relief Request SPT-006

RELIEF REQUEST SPT-007

I. IDENTIFICATION OF COMPONENTS

Approximately 30, small diameter (≤ 1 inch), Class 1, reactor coolant system (RCS) pressure boundary vent and drain, sample, and instrumentation connections.

II. IMPRACTICAL CODE REQUIREMENTS

Section XI 1995 Edition with addenda up to and including the 1996 Addenda, Examination Category B–P, Items B15.50 and B15.70 require system hydrostatic testing and associated VT–2 visual examination of all Class 1 pressure retaining piping and valves.

III BASIS FOR REQUEST FOR RELIEF

These piping segments are equiped with valves that provide for double isolation of the reactor coolant system (RCS) pressure boundary. These valves are maintained closed during normal operation and the piping outboard of the first isolation valve is, therefore, not normally pressurized. The proposed alternative provides an acceptable level of safety and quality based on the following:

1. ASME Section XI Code, 1995 Edition with addenda up to and including the 1996 Addenda, paragraph IWA–4540, provides the requirements for hydrostatic pressure testing of piping and components after repairs by welding to the pressure boundary. IWA–4540(b)(5) excludes component connections, piping, and associated valves that are 1 inch nominal pipe size and smaller from the hydrostatic test. Visual examination of these ≤ 1 inch diameter RCS vent/drain/sampling connections once each 10–year interval is unwarranted considering that a repair weld on the same connections is exempted by the ASME XI Code.

2. The non–isolable portion of the RCS vent and drain connections will be pressurized and visually examined as required. Only the isolable portion of these small diameter vent and drain connections will not be pressurized.

3. These piping connections are typically socket–welded and the welds received a surface examination after installation. The piping and valves are nominally heavy wall (schedule 160 pipe and 1500# valve bodies). The vents, drains, and sample lines are not subject to high stresses or cyclic loads, and the design ratings are significantly greater than RCS operating or design pressure.

The Technical Specifications (TS) require RCS leakage monitoring during normal operation. Should any of the TS limits be exceeded, then appropriate corrective actions, which may include shutting the plant down, are required to identify the source of the leakage and restore the RCS boundary.

During 1998 North Anna Unit 1 refueling outage similar piping segments were pressurized by removing a flange and connecting a test rig. A majority of these piping segments are located in close proximity to the RCS main loop piping thus requiring personnel entry into high radiation areas within the containment. The dose associated with this testing was 1.5 man–Rem.

By a letter dated September 3, 1998 the NRC approved a similar relief request for Edwin I. Hatch Plant, Units 1 and 2. Also, on April 25, 2000, the NRC approved a similar releif request for North Anna Power Station, Unit 1, TAC NO. MA5750.

IV. ALTERNATE PROVISIONS

As an alternative to Section XI reguired hydrostatic test of the subject Class 1 RCS pressure boundary connections the following is proposed:

1. The RCS vent, drain, instrumentation, and sample connections will be visually examined for leakage and any evidence of past leakage, with the isolation valves in the normally closed position each refueling outage during the ASME Section XI Class 1 System Leakage Test (IWB–5221).

2. During modes 1 through 4 the RCS will be monitored for leakage and radiation levels inaccordance with the requirements of the applicable Technical Specificaitons.

3. These alternative provisions will only be applied to the inservice testing performed to meet the requirements of Category B-P. They will not be applied to testing performed to satisfy requirements for post-repair/replacement activities related to these components.

The proposed alternative examination requirements will ensure that the overall level of plant quality and safety will not be compromised. Therefore approval to use the above alternative examination requirements to those of Section XI stated above in Section I is requested under the provisions of 10CFR50.55a (3).

End of Relief Request SPT-007

RELIEF REQUEST SPT-008

I. IDENTIFICATION OF COMPONENTS

Class 1, 2, and 3 piping, components and their supports.

II. CODE REQUIREMENTS

Section XI 1995 Edition with addenda up to and including the 1996 Addenda, paragraph IWA-4540 (a) requires that "After welding on a pressure boundary or installation of an item by welding or brazing, a system hydrostatic test shall be performed in accordance with IWA-5000."

III. BASIS FOR PROPOSED ALTERNATIVE

The Section XI Code has passed and published Code Case N-416-2, "Alternative Pressure Test Requirements for Welded Repairs, Fabrication Welds for Replacement Parts and Piping Subassemblies, or Installation of Replacements Items by Welding, Class 1, 2, and 3," dated May 5, 2000. This Code Case is very similar to an earlier revision, N-416-1, which has been approved for use, with condition, by the NRC in Regulatory Guide 1.147, Revision 12, dated May 1999. Code Case N-416-2 expanded the detail presented in scope of the Code Case to assure that it included items that are "fabricated" by welding as well as repaired or installed by welding. Section XI was concerned that not all would agree that the word "installed" would apply to each weld of a piping subassembly, for example, unless each weld was made to an existing portion of piping already part of the plant. The clarification assures that a weld joining two items not yet joined to the plant (i.e. fabricated), but are later joined by an additional weld to an item already part of the plant (i.e. installed) are subject to the same hydrostatic test requirements as the installation weld(s).

Code Case N-416-2 has been reviewed by NAPS 2 and determined to provide an acceptable level of quality and safety if implemented with the same conditions required for the implementation of Code Case N-416-1. The alternative testing requirements of Code Case N-416-1, if implemented with the additional nondestructive examination requirements stated in Regulatory Guide 1.147, has been determined by both Section XI and the NRC to provide an acceptable level of quality and safety. The fact that the weld may not actually join the item to the plant when it is actually made does not change this conclusion, if the requirements of the Code Case are meet.

IV. ALTERNATE PROVISIONS

NAPS 2 requests approval, as allowed by 10CFR50.55a (3), to use Code Case N-416-2, "Alternative Pressure Test Requirement for Welded Repairs, Fabrication Welds for Replacements Parts, and Piping Subassemblies, or Installation of Replacement Items by Welding, Class 1, 2, and 3," dated May 5, 2000. As part of the implementation of this alternative, North Anna Power Station will also implement the additional requirements required for implementation of Code Case N-416-1 as stated in Regulatory Guide 1.147, Revision 12, dated May 1999. Specifically, that in addition to those conditions specified in the Code Case, additional surface examinations will be performed on the root (pass) of butt and socket welds of the pressure retaining boundary of Class 3 components when the surface examination method is used in accordance with Section III.

End of Relief Request SPT-008

Section 2.6

RELIEF REQUEST FOR COMPONENT SUPPORTS

RELIEF REQUEST CS-001

I. IDENTIFICATION OF COMPONENTS:

Class 1, 2, and 3 Dynamic Restraints (Snubbers)

II. CODE REQUIREMENTS:

The ASME B&PV Code, Section XI, 1995 Edition with addenda up to and including the 1996 Addenda, paragraphs IWF-5200 (a) and (b) and IWF-5300 (a) and (b) require the use of the ASME/ANSI OM-1987, Part 4 (published in 1988) Code to perform the preservice and inservice examinations and tests of Class 1, 2, and 3 Snubbers.

III BASIS FOR ALTERNATIVE:

This action proposes, as an alternative to the requirements of ASME/ANSI OM-1987, Part 4 (published in 1988), to use the existing North Anna Power Station, Unit 2, Technical Specification, 4.7.10 SNUBBERS and specific paragraphs from ASME OMa-1996, Section IST, Subsection ISTD, "Inservice Testing of Dynamic Restraints (Snubbers) in Light-Water Reactor Power Plants."

Differences exist between the referenced Code requirements and NAPS 2 Technical Specification 4.7.10. "SNUBBERS". ASME/ANSI OM-1987, Part 4 (published in 1988) [Part 4] contains requirements, which were removed from the plant's Technical Specifications as recommended by Generic Letter 90-09, "Alternative Requirements for Snubber Visual Inspection Intervals and Corrective Actions" (GL 90-09). The generic letter was issued on December 11, 1990 to reduce the burden placed upon licensees by the excessively restrictive inspection schedule then contained in the Technical Specifications. Section XI continues to require the excessively restrictive inspection schedule for snubbers by its requirement to use Part 4 in the preservice and inservice examination and testing of snubbers. A later revision of the Part 4 standard, ASME OMa-1996, Section IST, Subsection ISTD, "Inservice Testing of Dynamic Restraints (Snubbers) in Light-Water Reactor Power Plants," (ISTD), changed the excessively restrictive requirements to essentially agree with the recommendations of GL 90-09. The rulemaking of September 22, 1999 recognized this fact and included in the rule a provision to allow the use of ISTD provided the licensee revises the applicable Technical Specification.

However, the simple inclusion of ISTD into the Technical Specifications does more than alter the excessive examination requirements of Part 4. ISTD is written

as a self-contained surveillance program for determining the continuing acceptability of snubbers. It is not designed to be used as a testing supplement to a more comprehensive program such as Section XI. The integration of Section XI and ISTD into an effective coherent examination and testing program along with the required change to the Technical Specifications results in a significant amount of administrative activity without a compensating increase in safety.

Revising the Technical Specifications to reference only the ISTD document is in itself an administrative activity with little if any impact on safety or quality. Many of the requirements being removed from the Technical Specification are very similar if not identical to the requirements being added by ISTD. NAPS 2 proposes that the following alternative approach avoids this unnecessary administrative impact and still provides a means to accomplish the examination and testing required by Section XI and regulation.

The current testing and examination requirements of Technical Specification 4.7.10 and the additional visual examination requirements of the approved Section XI edition have formed the basis of the North Anna Unit 2 inservice examination/testing program for snubbers for the past ISI interval. The use of this program had the approval of the NRC and is essentially the same as the program for examination and testing described in ISTD for inservice inspection. Therefore, the performance of examination requirements to Section XI with additional examinations and testing being performed to Technical Specification 4.7.10 has provided an acceptable level of quality and safety in the past. NAPS 2 continues to believe that the combination of Technical Specification 4.7.10 and Section XI provides an alternative that provides an acceptable level of quality and safety for inservice examination and testing of snubbers. The continued administration of a program based on Technical Specifications and Section XI requires only minimal administrative change activity.

However, to satisfy the preservice examination and testing requirements intended by Section XI, additional examination and testing activity is required beyond the above proposal for inservice activities. Therefore, NAPS 2 proposes that the inclusion of the examination and testing requirements contained in paragraphs ISTD 4, "Preservice Examination" (excluding paragraph 4.3) and ISTD 5, "Preservice Operability Testing" into the current snubber surveillance program provides an alternative with an acceptable level of safety and quality for the preservice examination and testing requirements. The inclusion of these requirements into the snubber surveillance program achieves the preservice inspection requirements of Section XI.

Paragraph 4.3 is not proposed as it addresses requirements best suited for the initial heat up and cool down of the plant. It would be a hardship to try and

impose these requirements on an operating plant such as NAPS 2, which is constructed with a sub-atmospheric containment. As an alternative to the requirements of paragraph 4.3, NAPS 2 will follow the guidance of IWF-2220 (b) for systems that operate at a temperature greater than 200 degrees F. IWF-2220(b) requires the Owner to perform an additional preservice examination on the affected component supports during or following the subsequent system heatup and cooldown cycle unless determined unnecessary by evaluation. This examination shall be performed during operation or at the next refueling outage. This Section XI action has been accepted as providing acceptable quality and safety by the regulation for supports and NAPS 2 believes it is acceptable as an alternative to paragraph 4.3 of ISTD.

No other requirements of ISTD will be implemented as part of this alternative.

IV. PROPOSED ALTERNATIVE TO CODE REQUIREMENTS:

NAPS 2 proposes as an alternative to Section XI requirements stated in Section II of this request, a snubber examination and testing program comprised of the following elements:

1) The continued implementation of the surveillance requirements of Technical Specification 4.7.10, "Snubbers," without change,

2) The implementation of the other applicable requirements of the ASME, Section XI Code, 1995 Edition with addenda up to and including the 1996 Addenda, unless specific approval has been obtained to do otherwise from the NRC pursuant to the requirements of 10CFR 50.55a and the plant's Technical Specifications. This will include using the VT-3 visual examination method in IWA-2213 for preservice and inservice examinations,

3) The preservice examination and testing requirements of ISTD paragraph 4, "Preservice Examination", excluding paragraph 4.3; and ISTD paragraph ISTD 5, "Preservice Operability Testing," and

4) As alternative to paragraph 4.3 of ISTD, for systems that operate at a temperature greater than 200 degrees F, NAPS 2 will perform an additional preservice examination on the affected snubbers during or following the subsequent system heatup and cooldown cycle unless determined unnecessary by evaluation. This examination may be performed during operation of the plant or at the next refueling outage. This is consistent with the requirements of IWF-2200(b).

No other requirements of ISTD will be implemented as part of this alternative.

NAPS 2 submits that the above alternative program provides an acceptable level of quality and safety without the burden of administrative changes that add little or no value to quality or safety, or the hardship of performing snubber assessments under sub-atmospheric conditions. Therefore, having met the criteria of 10CFR50.55a (a) (3) (i) and (ii), an authorization to implement the proposed alternative program as part of the third inspection interval is requested.

End of Relief Request CS-001

Section 2.7

RELIEF REQUESTS FOR PARTIAL EXAMINATIONS

(SECTION 2.7 IS RESERVED FOR FUTURE USE.)

Section 2.8

APPENDIX 1 - TECHNICAL REPORTS

2.9.1) Westinghouse Electric Company, WCAP-13165, "A Demonstration Of Compliance Of the Primary Loop Pump Casings Of The North Anna Units 1 And 2 To ASME Code Case N-481," December 1991 - Required by Code Case N-481.

Westinghouse Class 3

WCAP-13126

A DEMONSTRATION OF COMPLIANCE OF THE PRIMARY LOOP PUMP CASINGS OF THE NORTH ANNA UNITS 1 AND 2 TO ASME CODE CASE N-481

DECEMBER 1991

F. J. Witt

Verified: J. C. Schmertz

Approved by: for D. C. Adamonis, Acting Manager
Structural Mechanics Technology

WESTINGHOUSE ELECTRIC CORPORATION
Nuclear and Advanced Technology Division
P.O. Box 2728
Pittsburgh, Pennsylvania 15230-2728

© 1991 Westinghouse Electric Corp.

WPF0937J/120691:10

TABLE OF CONTENTS

Section	Title	Page
	List of Tables	ii
	List of Figures	iii
1.0	BACKGROUND AND INTRODUCTION	1-1
	1.1 Background	1-1
	1.2 Introduction	1-2
2.0	DESCRIPTION OF THE PRIMARY LOOP PUMP CASINGS OF NORTH ANNA UNITS 1 AND 2	2-1
3.0	FRACTURE TOUGHNESS CRITERIA FOR THE PUMP CASINGS	3-1
4.0	LOADS ON THE PUMP CASING NOZZLES	4-1
5.0	STABILITY EVALUATIONS	5-1
6.0	DISCUSSION AND CONCLUSIONS	6-1
7.0	REFERENCES	7-1
	APPENDIX A	A-1

LIST OF TABLES

Table	Title	Page
4-1	Comparison of the Faulted Loads for the Pump Casing Nozzles of North Anna Units 1 and 2 with the Level A Faulted Screening Loads	4-3
4-2	Comparison of the Normal Loads for the Pump Casing Nozzles of North Anna Units 1 and 2 with the Screening Level C Normal Loads	4-3

LIST OF FIGURES

Figure	Title	Page
2-1	Dimensional Sketches of the Model 93A Pump Casing with the Weld Seam Identified	2-2
2-2	A Model 93A Pump Casing Ready for Shipment	2-3

1.0 BACKGROUND AND INTRODUCTION

1.1 BACKGROUND

Periodic volumetric inspections of the welds of the primary loop pump casings of commercial nuclear power plants are required by Section XI of the ASME Boiler and Pressure Vessel Code (see Table IWB-2500-1, Examination Categories). These inspections are quite costly in terms of both dollars and radiation exposure (man-rem). To perform a volumetric inspection, complete disassembly of the pump is required. A lowering of the primary coolant water level most likely would be necessary which would, in turn, necessitate a complete core unload. Even then the volumetric inspection is very difficult. Since the pump casings are rigidly inspected prior to placing in service and no significant mechanisms exist for crack initiation and propagation, in-service volumetric inspection may be counter-productive. In recognition of this the ASME Code body approved a code case which provides an alternative to the volumetric inspection requirement (Reference 1[a]). The ASME Code Case is N-481: Alternate Examination Requirements for Cast Austenitic Pump Casings. It allows the replacement of volumetric examinations of primary loop pump casings with fracture mechanics based integrity evaluations (Item (d) of the code case) supplemented by specific visual inspections. It also requires that a report of the evaluation be submitted to the regulatory and enforcement authorities having jurisdiction at the plant site for review (Item (e) of the code case). A copy of the code case is given in Appendix A.

Following approval of Case N-481 by the ASME the Westinghouse Owners Group sponsored the required analyses which are applicable to the various primary loop pump casing models found in Westinghouse design nuclear steam supply systems. Specifically, stress analyses using enveloping loads were performed for Westinghouse design primary loop pump casings as were fracture mechanics analyses for postulated flaws. Compliance to Item (d) of ASME Code Case N-481 was demonstrated on a generic basis. This work is documented in WCAP-13045 (Reference 2).

[a] See Section 7.0 for a listing of references.

Since there is a variety of pump casing models, loads and materials as discussed in WCAP-13045, it was not feasible to qualify each plant of Westinghouse design specifically. Rather, enveloping or bounding criteria were set up whereby a specific utility, in most cases, needs only to show that the pump casings of interest fall under the umbrella established by the analyses. It is anticipated that most pump casings, perhaps all, can be easily qualified by showing they meet the required criteria.

WCAP-13045 was submitted to the Nuclear Regulatory Commission for review and approval as a reference topical report in October 1991. Approval has not been obtained as of the date of this report.

1.2 INTRODUCTION

It is the objective of this report to qualify the primary loop pump casings of the North Anna Units 1 and 2 nuclear power plants to Item (d) of ASME Code Case N-481 (Reference 1). When this report is supplemented by the visual inspections specified in the code case and approved by the regulatory authority, compliance will be accomplished.

The pump casings of the North Anna Units 1 and 2 nuclear power plant are described and the associated fracture toughness criteria, taking into account thermal aging, are discussed. Loads on the pump casing nozzles are identified. Finally, compliance with Item (d) of ASME Code Case N-481 is verified by direct comparison with information presented in WCAP-13045.

The contents of this report are non-proprietary. To accomplish this, information is discussed and conclusions are drawn by examining WCAP-13045 without compromising proprietary etiquette.

2.0 DESCRIPTION OF THE PRIMARY LOOP PUMP CASINGS OF NORTH ANNA UNITS 1 AND 2

The primary loop pump casings of North Anna Units 1 and 2 are of the Westinghouse Model 93A design. The pump casings are fabricated from SA351 CF8 cast stainless steel. Each pump casing consists of two castings welded together as shown in Figure 2-1 with the exception of Loop C of the North Anna Unit 2 plant. The Loop C pump casing is a single casting; thus in-service volumetric inspection is not required. For purposes of this report this pump casing is taken to be in compliance with ASME Code Case N-481 without further ado. In Figure 2-1 dimensions are given and the weld location, if present, is indicated. A picture of a Model 93A pump casing ready for shipment is shown in Figure 2-2.

The chemistry and fracture toughnesses of the pump casing parts are given in Table A-2, pages A-50 (North Anna Unit 2) and A-53 (North Anna Unit 1) of WCAP-13045.

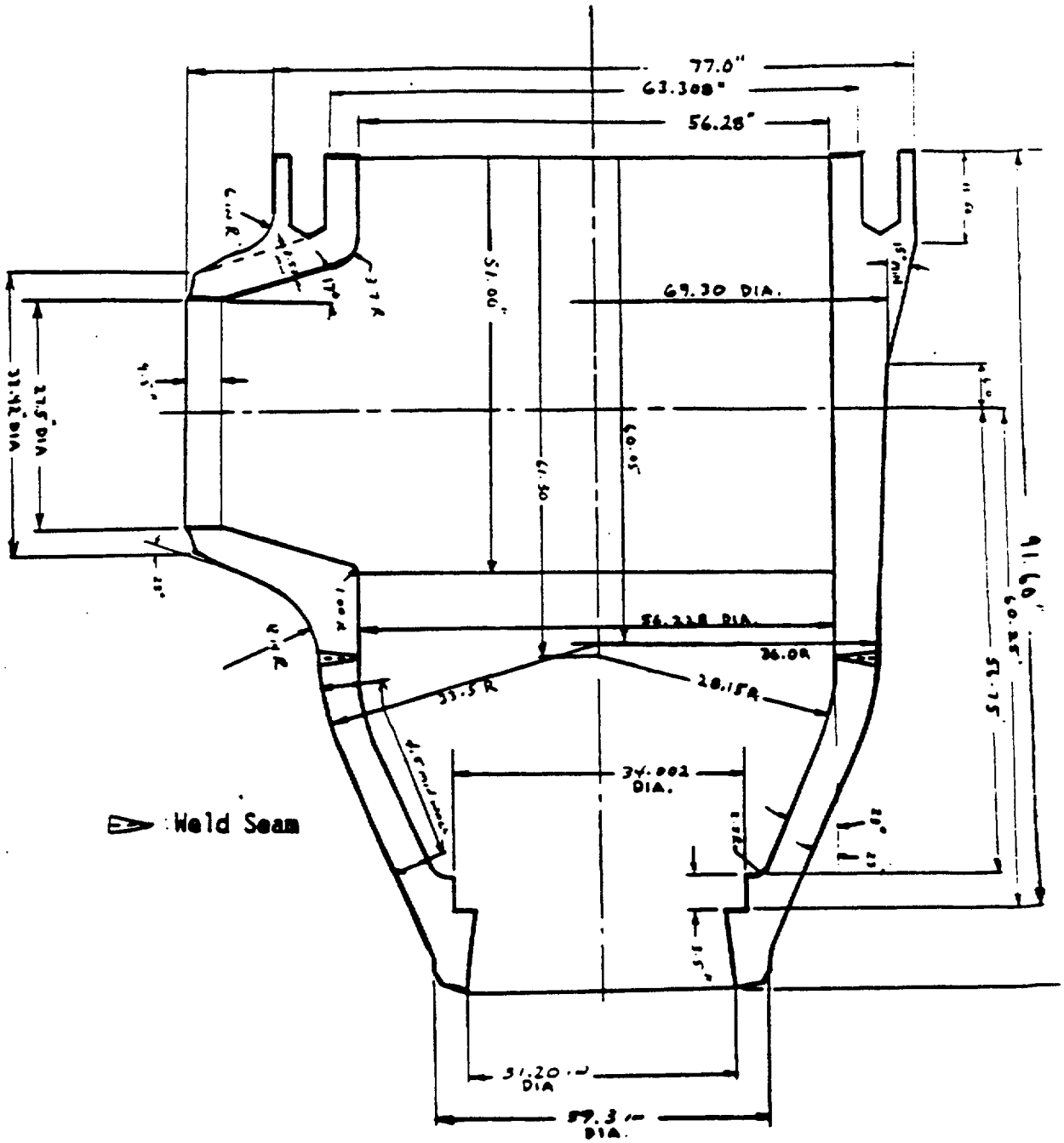

FIGURE 2-1 DIMENSIONAL SKETCHES OF THE MODEL 93A PUMP CASING WITH THE WELD SEAM IDENTIFIED

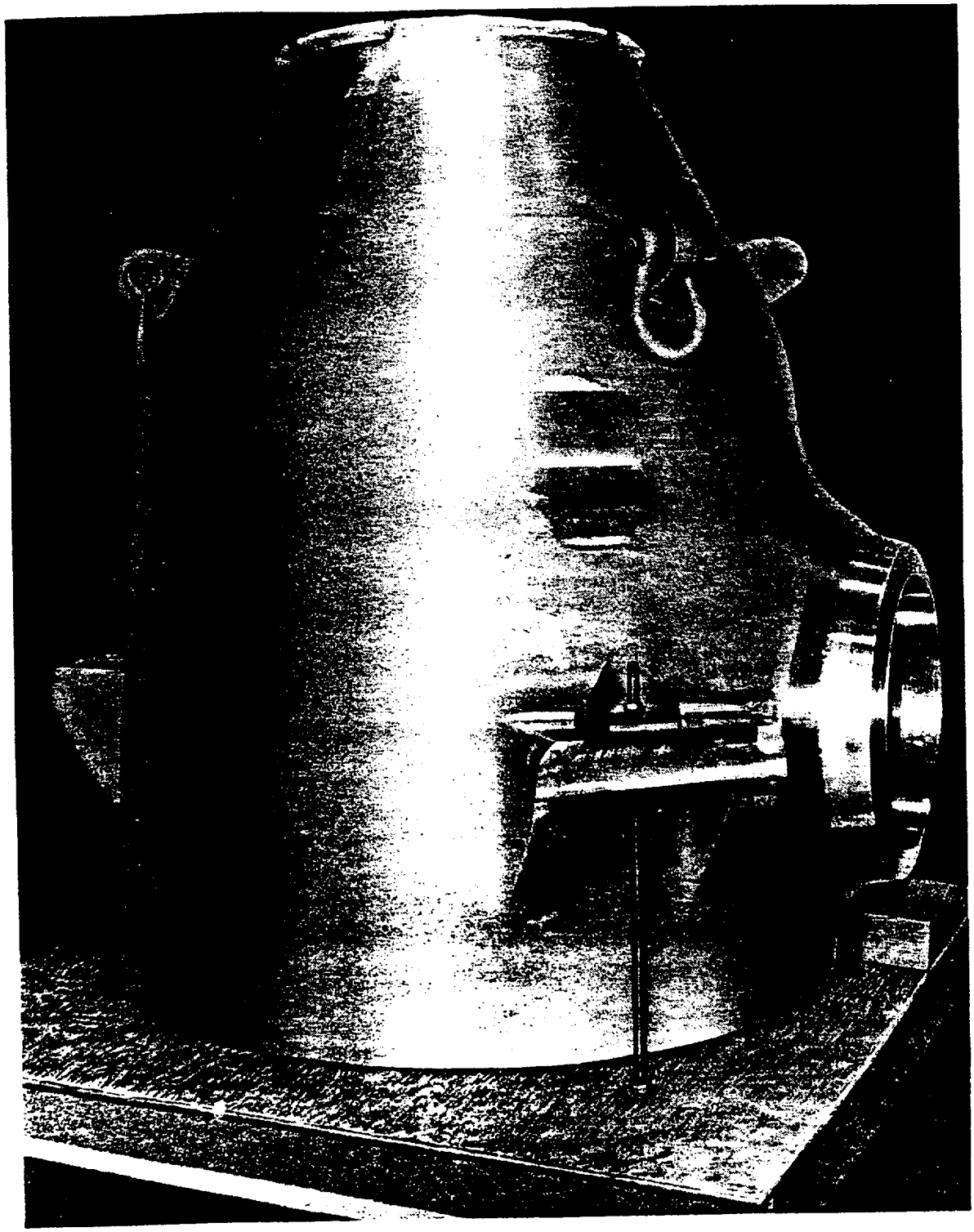

FIGURE 2-2 A MODEL 93A PUMP CASING READY FOR SHIPMENT

3.0 FRACTURE TOUGHNESS CRITERIA FOR THE PUMP CASINGS

Lower bound end-of-service life fracture toughness criteria for Model 93A pump casings are found in Table 5-1 of WCAP-13045 (page 5-4). The Model 93A pump casings fall under the "All Remaining Pump Casings" grouping. Bounding values for J_{Ic}, T_{mat}, and J_{max} are given. As noted in Section 11.3 of WCAP-13045 a value of 3000 in-lb/in^2 is also acceptable as the bounding criterion for J_{max}.

4.0 LOADS ON THE PUMP CASING NOZZLES

In WCAP-13045 enveloping axial force and moment loadings on the inlet and outlet pump casing nozzles were applied in the three-dimensional finite element analyses of the Model 93A pump casing. In this section the faulted nozzles loads (i.e., the normal plus safe shutdown earthquake nozzle loads) for the North Anna Units 1 and 2 pump casings are compared with the enveloping faulted loads. The normal loads are compared with screening normal loads for evaluating the loss-of-load upset condition.

For faulted conditions the axial force, F, is taken as the absolute sum of the axial forces of the individual loading components. For the purpose at hand, the x-direction is taken as the axial direction of the piping welded to the nozzle with y and z designating the remaining orthogonal coordinates. The bending moment at the nozzle of interest is calculated by:

$$M = (M_y^2 + M_z^2)^{0.5}$$

where M_y is the absolute sum of the bending moments in the y-direction for the various individual loading components. Similarly M_z is the absolute sum for the z-direction. The individual loading components are pressure, deadweight, normal thermal expansion, safe shutdown earthquake with inertial forces and safe shutdown earthquake with anchor motion. The absolute sum method is also applied in determining normal loads.

The faulted loads determined as above are compared in Table 4-1 to the Level A screening loads as defined in WCAP-13045 (see Table 6-2). The faulted force and moment were chosen as maximum values among those for the three loops. The slight difference in temperature is of no consequence considering the load margins. The North Anna Units 1 and 2 nozzle loads are seen to be bounded by Level A loads.

In Table 4-2 the normal operating loads obtained as above for North Anna Units 1 and 2 are compared with the Level C screening nozzle loads (see Table 6-2 of WCAP-13045)

which were used for evaluating the loss-of-load upset condition. The normal operating force and moment were chosen as maximum values among those of the three loops. The North Anna Units 1 and 2 normal loads are bounded by the corresponding Level C loads.

TABLE 4-1

COMPARISON OF THE FAULTED LOADS FOR THE PUMP CASING NOZZLES
OF NORTH ANNA UNITS 1 AND 2 WITH THE LEVEL A FAULTED SCREENING LOADS

Load	Pressure (psig)	Temperature (°F)	Inlet Nozzle		Outlet Nozzle	
			Force[a] (kips)	Moment (in-kips)	Force[a] (kips)	Moment (in-kips)
North Anna Units 1 and 2	2235	557	1922	24525	1760	17772
Level A	2300	550	2000	40000	1800	20000

[a]Includes force due to normal operating pressure.

TABLE 4-2

COMPARISON OF THE NORMAL LOADS FOR THE PUMP CASING NOZZLES OF
NORTH ANNA UNITS 1 AND 2 WITH THE SCREENING LEVEL C NORMAL LOADS

Load	Inlet Nozzle		Outlet Nozzle	
	Force[a] (kips)	Moment (in-kips)	Force[a] (kips)	Moment (in-kips)
North Anna Units 1 and 2	1860	17492	1364	7359
Level C	1900	23000	1400	8000

te: Stresses were determined for a pressure of 2635 psig for the loss-of-load transient with the Level C moment loading unchanged. Stresses were also determined for a pressure of 2485 psig which is the reactor trip high pressure limitation.

[a]Includes force due to normal operating pressure

5.0 STABILITY EVALUATIONS

In Section 4.0 it is seen that the faulted loads of the pump casing nozzles of North Anna Units 1 and 2 are bounded by the Level A screening load of WCAP-13045. Thus the J_{app} (applied value of the J-integral) and T_{app} (applied value of the tearing resistance) values given for the Level A loads in Table 11-7 of WCAP-13045 are conservative estimates for the corresponding J_{app} and T_{app} values for the faulted loads of the North Anna Units 1 and 2 pump casings. It is concluded that the flaws postulated in the North Anna Units 1 and 2 pump casings are stable when subjected to faulted loads.

It is also seen in Section 4.0 that the normal operating loads of the pump casing nozzles of North Anna Units 1 and 2 are bounded by the Level C screening loads of WCAP-13045. Thus the J_{app} and T_{app} values for the Level C loads given in Table 11-7 of WCAP-13045 are conservative estimates for the corresponding J_{app} and T_{app} values for the loss-of-load condition of the North Anna Units 1 and 2 pump casings. It is concluded that the flaws postulated in North Anna Units 1 and 2 pump casings are stable when subjected to loss-of-load conditions.

It is thus concluded that for the primary loop pump casings of North Anna Units 1 and 2 all of the postulated flaws under the governing stress conditions are stable.

6.0 DISCUSSION AND CONCLUSIONS

This report provides an assessment of the primary loop pump casings of North Anna Units 1 and 2 to the conditions of Item (d) of ASME Code Case N-481 (see Appendix A).

ASME Code properties are used in the reference analyses of WCAP-13045. Fracture toughness values specific to the North Anna Units 1 and 2 pump casings are also given in WCAP-13045. Thus Item (d) (1) is satisfied.

Three-dimensional stress analyses of the Model 93A primary loop pump casing used in North Anna Units 1 and 2 are presented in WCAP-13045. This satisfies Item (d) (2).

The operating history of Westinghouse design primary loop pumps is reviewed in Section 2.0 of WCAP-13045. This satisfies Item (d) (3). Flaws are postulated in the Model 93A pump casings in Section 9.0 of WCAP-13045 satisfying Item (d) (4). One- quarter thickness reference flaws with a six-to-one aspect ratio are postulated in WCAP-13045 consistent with Item (d) (5).

By comparing the loads of the North Anna Units 1 and 2 pump casings with the screening loads of WCAP-13045, as presented in this report, and evaluating the resulting J_{app} and T_{app} against the fracture toughness values noted in the discussion of Item (d) (1) above as discussed in Section 5.0, the stability of the flaws postulated in the North Anna Units 1 and 2 primary loop pump casings are established. This satisfies Item (d) (6).

Thermal aging embrittlement of the North Anna Units 1 and 2 pump casings was considered in establishing the appropriate fracture toughness values given in Tables A-2, pages A-50 and A-53 of WCAP-13045. No other mechanism is known to degrade the properties of the pump casings during service. Item (d) (7) is so satisfied.

It is concluded that the primary loop pump casings of North Anna Units 1 and 2 are in compliance with Item (d) of ASME Code Case N-481.

7.0 REFERENCES

1. Case N-481: "Alternate Examination Requirements for Cast Austenitic Pump Casings," Section XI, Division 1, Cases of ASME Boiler and Pressure Vessel Code, Approval Date: March 5, 1990.

2. F. J. Witt and J. F. Petsche, Compliance to ASME Code Case N-481 of the Primary Loop Pump Casings of Westinghouse Type Nuclear Steam Supply Systems, WCAP-13045, September 1991 (Westinghouse Proprietary Class 2).

ATTACHMENT A

CASES OF ASME BOILER AND PRESSURE VESSEL CODE

Approval Date: March 5, 1990

See Numerical Index for expiration and any reaffirmation dates.

Case N-481
Alternate Examination Requirements for Cast Austenitic Pump Casings
Section XI, Division 1

Inquiry: When conducting examination of cast austenitic pump casings in accordance with Section XI, Division 1, what examinations may be performed in lieu of the volumetric examinations specified in Table IWB-2500-1, Examination Category B-L-1, Item B12.10?

Reply: It is the opinion of the Committee that the following requirements shall be met in lieu of performing the volumetric examination specified in Table IWB-2500-1, Examination Category B-L-1, Item B12.10:

(a) Perform a VT-2 visual examination of the exterior of all pumps during the hydrostatic pressure test required by Table IWB-2500-1, Category B-P.

(b) Perform a VT-1 visual examination of the external surfaces of the weld of one pump casing.

(c) Perform a VT-3 visual examination of the internal surfaces whenever a pump is disassembled for maintenance.

(d) Perform an evaluation to demonstrate the safety and serviceability of the pump casing. The evaluation shall include the following:

(1) evaluating material properties, including fracture toughness values;
(2) performing a stress analysis of the pump casing;
(3) reviewing the operating history of the pump;
(4) selecting locations for postulating flaws;
(5) postulating one-quarter thickness reference flaw with a length six times its depth;
(6) establishing the stability of the selected flaw under the governing stress conditions;
(7) considering thermal aging embrittlement and any other processes that may degrade the properties of the pump casing during service.

(e) A report of this evaluation shall be submitted to the regulatory and enforcement authorities having jurisdiction at the plant site for review.