LICENSEE POST-EXAM COMMENTS

ST. LUCIE EXAM
50-335, 389/2001-301

MAY 14 - 18 & 21 - 25, 2001

LICENSEE POST-EXAM COMMENTS

Florida Power & Light Company, 6501 South Ocean Drive, Jensen Beach, FL 34957

FPL

May 24, 2001

L-2001-132
10 CFR 55.5

Regional Administrator, Region II
U. S. Nuclear Regulatory Commission
Attn: Mr. Michael E. Ernstes, Chief
Operator Licensing and
Human Performance Branch
Atlanta, GA 30303

Re: St. Lucie Units 1 and 2
Docket Nos. 50-335 and 50-389
Operator License Training Program
May 21, 2001 RO/SRO Exam Comments

On May 21, 2001, Florida Power & Light Company (FPL) administered the written Reactor Operator (RO) and Senior Reactor Operator (SRO) Examinations at St. Lucie Plant. An exam analysis was performed after administration of the exams and the attached comments on the RO/SRO written examinations are submitted by the facility for consideration by the NRC. These comments affect the following exam questions (RO/SRO) 2/2, 25/20, 72/58, 90/71, 94/74, and SRO exam question 98.

Please contact Doug Lauterbur if you have any questions.

Very truly yours,

Rajiv S. Kundalkar
Vice President
St. Lucie Plant

RSK/GRM

Attachments

Question RO 2, SRO 2

Unit 1 has experienced a LOOP followed by a LOCA. The 1B CCW pump failed to start following the LOOP. Which of the following describes the configuration of the CCW system?

(assume all 'AB' lineup to the 'B' side and no Operator actions)

A. The 1A and 1C CCW pumps running with the 1C CCW pump supplying both the 'A' and 'B' CCW headers.

B. The 1A and 1C CCW pumps running with the 1C CCW pump supplying only the 1B CCW header.

C. The 1A CCW pump running supplying only the 1A CCW header.

D. The 1A CCW pump running supplying the 1A and 1B CCW headers.

A. Incorrect, 1C CCW pump remains in pull to lock until manually removed

B. Incorrect, 1C CCW pump remains in pull to lock until manually removed

C. **Correct**

D. Incorrect, the 'N' header valves close on SIAS which isolates the A and B headers

Question level: 2
Question source: New
Exam: Both
K/A: 026.AK3.02
Importance: 3.6/3.9
References: Text 0711209, LP 0702209-08

CCW PUMP PIPING ARRANGEMENT

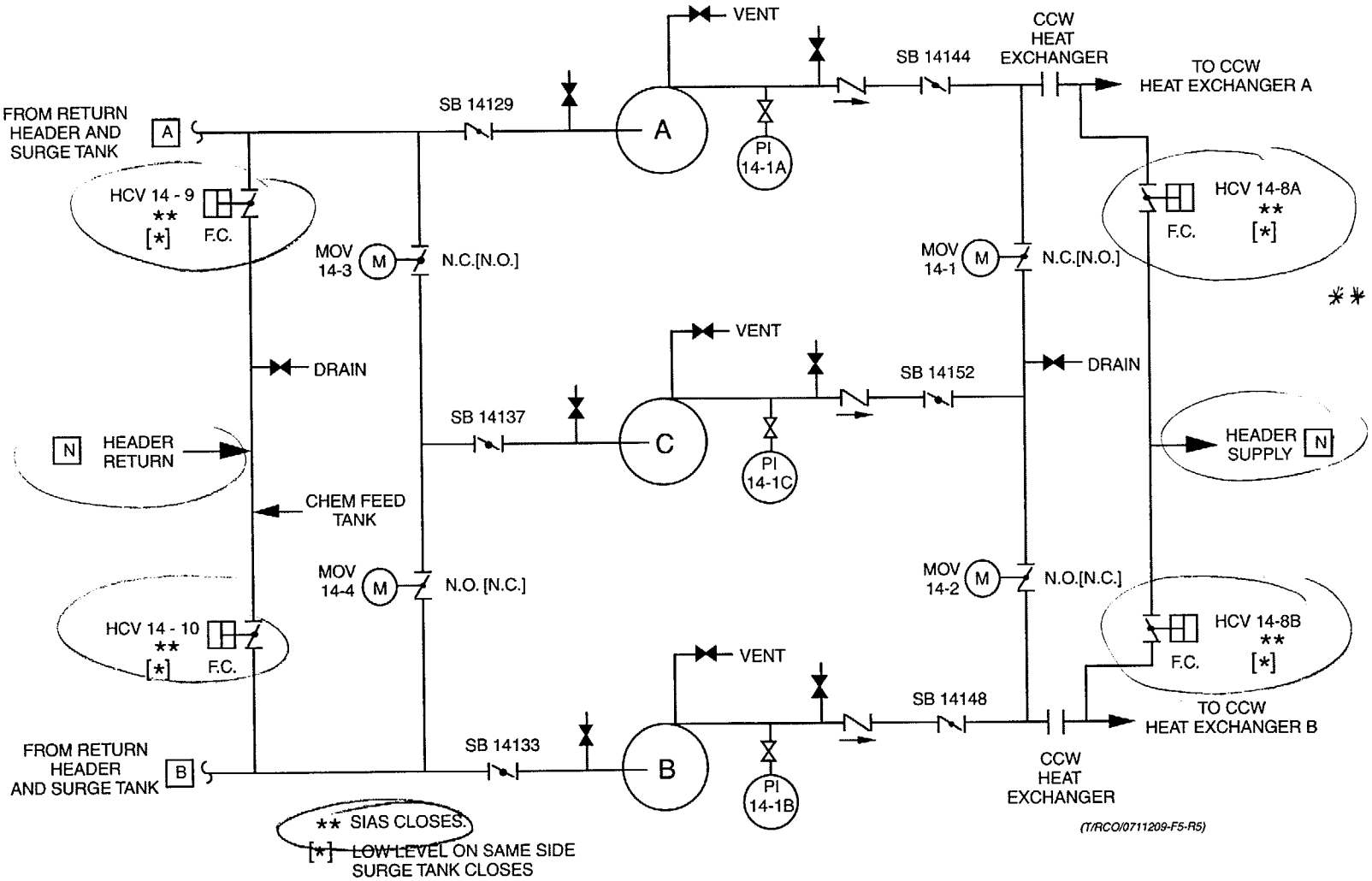

** REQUIRES SIAS TO CLOSE, OTHERWISE BOTH A & B HDRS ARE SUPPLIED BY ONE PUMP

FIGURE 4

UNIT 1 - COMPONENT COOLING WATER SYSTEM

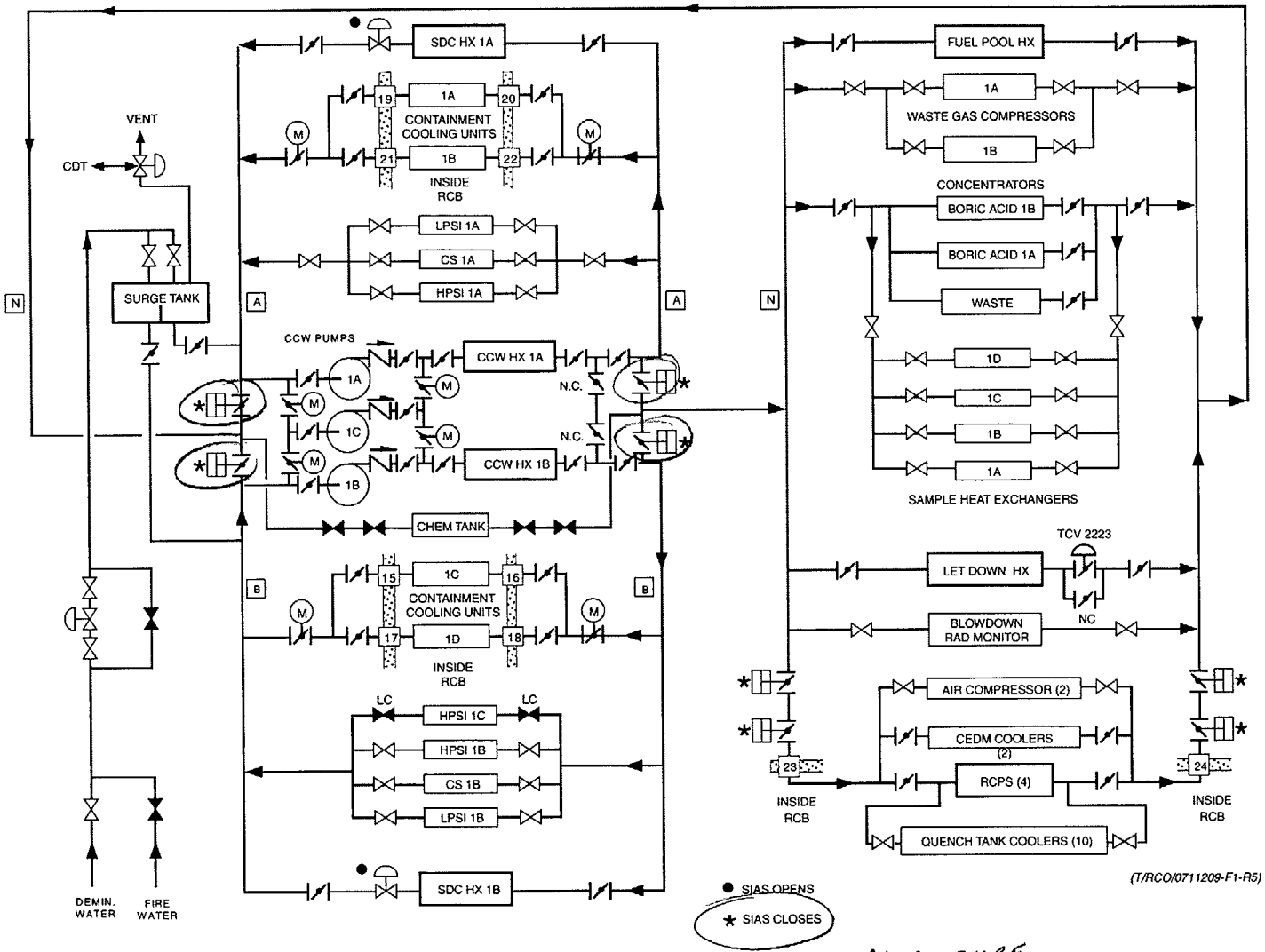

WITHOUT SIAS CLOSURE
N HDR VALVES REMAIN OPEN ?
ALL FLOWPATHS (A, B, C) CAN
BE SUPPORTED BY ONE PUMP

FIGURE 1

St. Lucie Plant Post-Written Examination Comments
Examination Administered 5/21/01

Question RO 2, SRO 2

This question asks which CCW header(s) will the 1A CCW pump be supplying after a LOOP followed by a LOCA. The key indicates that "C" is correct because it is assumed that SIAS has occurred isolating the "N" header therefore separating the "A" header from the "B" header. Some candidates selected distractor "D" because the stem did not provide enough information to determine that SIAS had actuated.

Recommendation: Accept C and D as correct responses.

Question RO 25, SRO 20

This question asks the student to determine if the proper RWT inventory has been transferred to the containment sump.

Using the attached reference drawing (Figure 9) a diagonal line is drawn representing 33 feet between the two solid lines for 32 feet and 34 feet. Follow the 9 foot RWT level line straight across to where it intersects the initial 33 foot line. Drawing a straight line down to the x-axis from this point results in an expected CNTMT sump level of slightly greater than 22 feet (approx. 22.2 feet).

Since the actual sump level is 22 feet, it was assumed by some of the candidates that some sump inventory has been lost outside CNTMT. Conversely, depending on how precise the data is evaluated on Figure 9, it is evident how some students determined that all water in the RWT had been transferred to the CNTMT sump.

Recommendation: Accept B and D as correct answers.

Question R0 25 SRO 20

Unit 1 is in 1-EOP-03 'Loss of Coolant Accident' with the following conditions:

- Containment pressure is 15 psig
- Pre LOCA RWT level was 33 feet
- Current RWT level is 9 feet
- Containment sump level is 22 feet

The Containment sump level indicates:

A. significant RWT inventory is not being transferred to the sump.

B. all RWT water up to this point has remained in the Containment sump.

C. additional water other than RWT inventory has been added to the sump.

D. some sump inventory is being lost outside containment.

References required: 1-EOP-99 Figure 9

A. Incorrect

B. **Correct**

C. Incorrect

D. Incorrect

Question Level: 2
Question Source: New
Exam: Both
K/A: 026.A1.03
Importance: 3.5/3.5
References: 1-EOP-99 Fig. 9,
0711207 ECCS lesson text, 0702401-02 ESFAS Lesson plan

FIGURE 9
RWT LEVEL VS. CONTAINMENT SUMP LEVEL

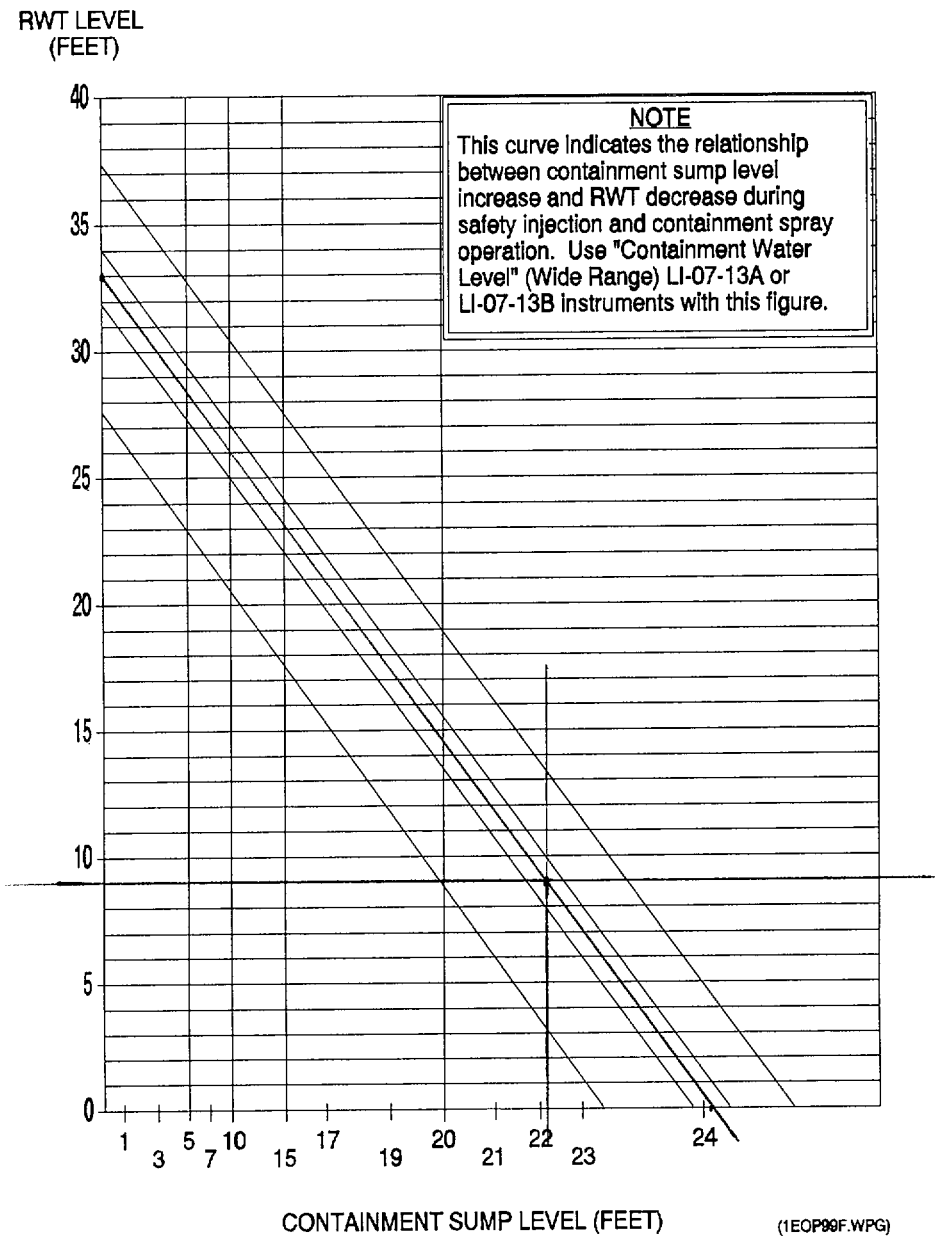

St. Lucie Plant Post-Written Examination Comments
Examination Administered 5/21/01

Question RO 72, SRO 58

The question describes an event regarding an unanticipated continuous withdrawal of a CEA on Unit 1. The question of concern is to assess the operability of the particular CEA and the necessity for subsequent operator actions. The correct choice selected by the student depends on the student's recognition of directions provided in the CEA Off-Normal procedure 1-0110030 Appendix A for verifying CEA operability.

Given that the stem provides for a deviation of 7.0 inches, a student knowledgeable of the Technical Specification 3.1.3 would assume that the Technical Specification requirement for being deviated less than 7.5 inches is met. Therefore, answer A is correct.

The CEA Off-Normal procedure utilizes "Appendix A" as its determinant for CEA operability. It establishes that for the CEA to be operable, it must be capable of smooth manual insertion and withdrawal using the Manual Individual mode for moving the CEA. Therefore, the student who correctly selected "D" conservatively assures an evaluation of the CEA and it's drive mechanism prior to considering it operable (as defined by Appendix A). Assuming the CEA is initially inoperable until proven otherwise, Technical Specification Surveillance Requirement 4.1.1.1.1 requires a determination of the Shutdown Margin within 1 hour after detection of an inoperable CEA.

Since the stem of the question did not provide a reference to the use of a particular procedure or Technical Specifications, certain assumptions had to be made by the student.

Recommendation: Accept A and D as correct responses.

Question RO 72, SRO 58

Unit 1 is in Mode 2 with CEA's being withdrawn for a Reactor Startup. When Group 7 rods are stepped out to 70" withdrawn, CEA #41 continues to withdraw with the CEDMCS panel in off. CEA #41 stops moving at 77 inches withdrawn.

Which of the following describes the operability of CEA #41?

CEA #41 is:

A. operable and meets the meets the technical specification alignment requirements.

B. operable, but must be realigned to 70" withdrawn within one hour.

C. inoperable and the remainder of group 7 CEA's must be positioned to 77" withdrawn within one hour.

D. inoperable, and shutdown margin requirements must be satisfied.

A. **Correct**

B. Incorrect, CEA meets alignment requirements of 7.5"

C. Incorrect, CEA not inoperable but would apply if misaligned 7.5-<15" and CEA was declared inoperable

D. Incorrect, shutdown margin required only if CEA inoperable and misaligned <15".

Question Level: 2
Question Source: New
Exam: Both
K/A: 001.AK3.02
Importance: 3.2/4.3
References: 1-0110030 CEA Off-Normal operation and realignment, Tech. Spec. 3.1.3.1, LP 0702405-12 CEDMCS Lesson Plan

1.0 TITLE:

CEA OFF-NORMAL OPERATION AND REALIGNMENT

2.0 PURPOSE:

This procedure provides instructions for operator action during abnormal operation and realignment of Control Element Assemblies (CEA) while in Modes 1, 2, or 3, and failure of CEA position indication.

3.0 REFERENCES:

NOTE

One or more of the following symbols may be used in this procedure:

§ Indicates a Regulatory commitment made by technical specifications, condition of license, audit, LER, bulletin, etc., and should NOT be revised without Facility Review Group approval.

¶ Indicates a management directive, vendor recommendation, plant practice or other non-regulatory commitment that should NOT be revised without consultation with the plant staff.

Ψ Indicates a step that requires a sign off on a data sheet.

$§_1$ 3.1 St. Lucie Unit 1 Technical Specifications.

3.2 St. Lucie Plant Unit 1 FUSAR, Accident Analysis, Section 15.2.3.

3.3 NOP-1-0030125, "Turbine Shutdown - Full Load to Zero Load".

3.4 1-OSP-100.14, "Surveillance Requirements for Shutdown Margin, Modes 1 and 2 (Critical)".

3.5 NOP-1-0030123, "Reactor Operating Guidelines During Steady State and Scheduled Load Changes".

3.6 1-ONP-02.02, "Emergency Boration".

3.7 FOP-89-054, "Multiple Slipped/Dropped CEAs."

3.8 In House Event Report 89-077.

APPENDIX A
CEA INVESTIGATION FOR OPERABILITY
(Page 1 of 4)

CAUTION

- Reactor Power shall NOT be increased above the stable power level established following the CEA(s) misalignment.
- Criticality shall be anticipated any time CEAs are being withdrawn.

1. For the affected CEA(s), perform the following to determine operability:

   A. Depress manual individual mode select pushbutton.

   B. Depress the affected CEA pushbutton.

   C. Depress CEA group select pushbutton for affected group.

   D. If CEA motion inhibit is present, Then:

      1. Depress inhibit bypass pushbutton for affected group.

      2. Hold down CEA motion inhibit bypass pushbutton.

   E. If the CEA was dropped, Then first withdraw the affected CEA until core mimic rod bottom light and lower electrical limit lights both deenergize.

CAUTION

Do not exceed ± 10 inches of the original position without permission from the ANPS.

   F. Insert and withdraw the affected CEA and check for smooth operation and normal indications.

   G. If CEA is determined to be operable proceed to the applicable appendix for CEA realignment.

APPENDIX A
CEA INVESTIGATION FOR OPERABILITY
(Page 2 of 4)

2. If the CEA(s) does NOT operate (move), Then check the status of the CEDM coil power supply panels in the cable spreading room. The indicating lights should be in the following condition:

   A. Red "Circuit Breaker Closed" light should be lit.

      1. If CEA has been dropped and light is out, Then open that CEA's panel door and open (if not already open) then reclose the 4 pole breaker.

   B. White "Circuit Breaker Open" light should be out.

   C. Green "Power On" light on the timer module should be lit.

   D. Red, CEDM 15V Transient Monitor System power supply lights (two lights per CEA on rear of the coil power supply panels) should be out.

      1. Make note of a lit power supply alarm light.

      2. Attempt to reset the power supply red light by depressing the light itself.

      3. Test the power supply lights on the affected CEDM to make sure the bulbs are good. This is done by pressing the four push-buttons on the side of the CEDM 15V Transient Monitor System.

      4. Again, reset the red lights.

      5. If lights still lit, Then CONTACT the I&C department for assistance and NOTIFY them of the problem and any abnormalities found.

   E. Check the air conditioning system for proper operation.

   F. Check the coil power programmer and supply panel fans for proper operation.

APPENDIX A
CEA INVESTIGATION FOR OPERABILITY
(Page 3 of 4)

2. (continued)

G. Contact the I&C Dept. for assistance and notify them of the problem and any abnormalities found.

1. Check the CEDPDS and CEA drive system for alarms that might indicate the rod problem.

¶1 2. CONDUCT a pre-troubleshooting briefing to include the following:

- Potential for control rod drop.
- Review of the testing procedure.
- Review of expected alarms.
- Review of expected indication.
- Installation and removal of the Gripper Engagement Module (GEM).

CAUTION
Do NOT exceed ± 10 inches of original position without permission from the ANPS.

3. Withdraw and insert the rods in manual individual or manual group at the direction of I&C to support troubleshooting.

H. Have I&C perform the following as necessary.

1. Check associated power supplies and fuses.

2. Obtain coil current traces and voltage measurements to determine the location of trouble.

APPENDIX A
CEA INVESTIGATION FOR OPERABILITY
(Page 4 of 4)

2. (continued)

   H. (continued)

> NOTE
> Two or more CEAs simultaneously transferring to the lower gripper could indicate CDES noise caused by system grounds.

   3. If two or more CEAs simultaneously transfer to the lower gripper, Then perform the following:

      a. Direct I&C to troubleshoot for possible system grounds.

      b. Minimize movement of CEAs.

   I. Proceed to the applicable Appendix for CEA realignment or to Appendix B if CEA is determined to be inoperable.

END OF APPENDIX A

APPENDIX B
ONE OR MORE CEA(S) INOPERABLE
(Page 1 of 2)

1. Ensure the following:

   A. CEDS in OFF.

   B. Turbine power adjusted to equal reactor power.

2. Ensure Appendix A "CEA Investigation for Operability" has been performed.

> CAUTION
> Emergency boration may be required if one CEA is NOT fully inserted and known to be untrippable or immovable due to mechanical interference or excessive friction.

§1 3. With more than one CEA known to be untrippable, or immovable due to excessive friction or mechanical interference immediately commence emergency boration, as per 1-ONP-02.02, "Emergency Boration" and be in Hot Standby within six hours, in accordance with 1-ONP-22.01, "Rapid Down Power". Ensure adequate shutdown margin, as per 1-OSP-100.14, "Surveillance Requirements for Shutdown Margin, Modes 1 and 2 (Critical)".

§1 4. With one CEA NOT fully inserted and known to be untrippable, or immovable due to excessive friction or mechanical interference, immediately ensure adequate shutdown margin as per 1-OSP-100.14, "Surveillance Requirements for Shutdown Margin, Modes 1 and 2 (Critical)" and be in Hot Standby within six hours, as per NOP-1-0030125, "Turbine Shutdown - Full Load to Zero Load".

APPENDIX B

ONE OR MORE CEA(S) INOPERABLE

(Page 2 of 2)

§1 5. With more than one CEA inoperable for reasons other than those stated in Step 3 above, be in Hot Standby within six hours, as per NOP-1-0030125 "Turbine Shutdown-Full Load to Zero Load". Ensure adequate shutdown margin within one hour, as per 1-OSP-100.14, "Surveillance Requirements for Shutdown Margin, Modes 1 and 2 (Critical)".

§1 6. With one CEA inoperable for reasons other than those stated in Step 4 above, but within 7.5 inches of all other CEAs in its group, and (a) fully withdrawn, or (b) within the long term steady state insertion limits if CEA is in group 7, or (c) inserted beyond the long term insertion limits as restricted by specification 3.1.3.6, operation in Modes 1 and 2 may continue. Ensure adequate shutdown margin within one hour and at least once per 8 hours per 1-OSP-100.14, "Surveillance Requirements for Shutdown Margin, Modes 1 and 2 (Critical)".

7. With one CEA inoperable for reasons other than stated in Step 4 above and misaligned by more than 15 inches, refer to Appendix D. ENSURE adequate shutdown margin within one hour and at least once every 8 hours in accordance with 1-OSP-100.14, Surveillance Requirements for Shutdown Margin, Modes 1 and 2 (critical).

8. Refer to applicable CEA position deviation appendix as condition warrants.

END OF APPENDIX B

St. Lucie Plant Post-Written Examination Comments
Examination Administered 5/21/01

Question RO 90, SRO 71

This question requests determination of the "preferred" method for maintaining the level of an isolated steam generator less than 100%.

A review of 1-EOP-04 *Steam Generator Tube Rupture* does not identify a "preferred" method for maintaining the level of an isolated steam generator but rather provides alternate methods of level maintenance.

1-EOP-04 Step 22 directs the operator to depressurize the reactor coolant system 0 to 50 psi less than the isolated steam generator. If backflow is not desired, the operator is directed to align the steam generator blowdown system to the monitor storage tanks (MST's). This step is unique in providing a choice of actions based on plant conditions as opposed to an inability to perform an action. Any of the methods listed can be the preferred method depending on plant conditions that may exist at a particular time. No other information was provided in the question stem regarding plant conditions that would suggest that there was a preferred method.

Current plant practice is to maintain the "C" MST with enough capacity to drain a steam generator should plant conditions be such that backflow of a faulted and isolated steam generator into the RCS (causing a RCS dilution) is not desired.

Recommendation: Accept B and C as correct responses.

5.0 OPERATOR ACTIONS: (continued)

INSTRUCTIONS	CONTINGENCY ACTIONS
21. BORATE to maintain adequate SDM throughout the RCS cooldown.	21. If the BAMTs and the RWT are NOT available, Then ALIGN the SITs to the VCT for RCS Make-up. **REFER TO** Appendix AA, Aligning SITs to VCT for RCS Make-up.
* 22. MAINTAIN the isolated S/G level less than 100% (wide range) by depressurizing the RCS 0 to 50 psi less than the isolated S/G pressure.	22. If backflow from S/G to the RCS is NOT desired, Then MAINTAIN isolated S/G level by **ONE** of the following methods: A. Operation of the Blowdown System as follows: 1. ENSURE sufficient capacity is available in the Monitor Storage Tanks and Blowdown Cooling System is operable. 2. Locally CLOSE Vacuum Drag Valves on both units (V31189 on Unit 1 and V31190 on Unit 2). 3. CONTACT Unit 2 Control Room to isolate S/G blowdown. 4. ENSURE blowdown is aligned to Demineralizer Trains.

(Continued on Next Page)

5.0 OPERATOR ACTIONS: (continued)

INSTRUCTIONS	CONTINGENCY ACTIONS
	22. (continued) A. (continued) 5. If a CIAS or high radiation signal has isolated S/G blowdown containment isolations, Then they may be opened as follows: a. For 1A S/G, PLACE the control switch for FCV-23-3 in the CLOSE/OVERRIDE position, Then PLACE the switch in the OPEN position. b. For 1B S/G, PLACE the control switch for FCV-23-5 in the CLOSE/OVERRIDE position, Then PLACE the switch in the OPEN position. c. OPEN FCV-23-4 (1A S/G) or FCV-23-6 (1B S/G). OR B. Steaming to condenser using SBCS.

electrical problems) until proven operable, the applicant would be, in essence, assuming the answer. If the applicant were, during the course of licensed duties, to assume that a CEA in this situation was inoperable due to erratic behavior alone, the applicant would find action statement c more applicable. Action c states:

"With one full length CEA inoperable due to causes other than addressed in Action a above [due, for example, to operator judgement], but within its above specified alignment requirements...operation in MODES 1 and 2 may continue." However, this was not offered as one of the options to be selected in this question. Thus, the applicant is faced with a situation in which a CEA is not misaligned unacceptably and which has not been shown to be inoperable. The only correct selection in this case would be answer A. While assuming that the CEA in this case is inoperable until proven operable is certainly a conservative approach, it is not the correct approach for the conditions given and technical specification definition of operability (the definition of which this question tested).

4. RO Exam Question 90/SRO Exam Question 71

Recommendation not accepted. This question asked applicants to identify the "preferred" method of maintaining steam generator water level in an isolated steam generator which has experienced a tube rupture. The correct answer was C, "Depressurize the RCS to less than the ruptured steam generator pressure." The licensee has suggested that answer B, "Align and open S/G blowdown to the Monitor Storage tanks," should also be considered correct. The basis for this suggestion is that EOP-4, "Steam Generator Tube Rupture," does not identify a "preferred" method, but rather offers alternative methods, of level maintenance. It is true that the subject EOP does not identify a method with the word "preferred." It is also true that the EOP in question allows steam generator level to be controlled through the operation of the blowdown system aligned to the monitor storage tanks, as is described in answer B.

Referring to EOP-4, step 22 states "MAINTAIN the isolated S/G level less than 100% (wide range) by depressurizing the RCS 0 to 50 psi less than the isolated S/G pressure." The CONTINGENCY ACTIONS for this step state "If backflow from the S/G to the RCS is NOT desired, Then MAINTAIN isolated S/G level by **ONE** of the following methods:" The procedure then describes the method to be employed in aligning the blowdown system to the monitor storage tanks, as described in answer B, and steaming the affected steam generator to the condenser, as described in answer A. If the licensee's suggestion (that the lack of the use of the word "preferred" means, in essence, that all options are equally preferable) is considered correct, it would appear that there are three, rather than two, correct answers to this question, necessitating the removal of the question from the test.

If one refers to a standard definition of the word "prefer," one finds it described as "...to put before something else in rank," "to put before something or someone else in one's liking," or "to give preference or priority to" (Webster's New World Dictionary, Third College Edition). In placing the control of steam generator level via RCS depressurization as the sole action in the "instruction" column of the EOP at step 22, it seems clear that, barring an unforseen circumstance, this is the "preferred" action to take. In point of fact, the wording of the "contingency" column for step 22 ("If backflow from the S/G to the RCS is NOT desired, Then MAINTAIN isolated S/G level by **ONE** of

Question RO 90, SRO 71

Unit 1 has isolated the 1A S/G due to a SGTR.

In accordance with 1-EOP-04, which of the following is the preferred method of maintaining the isolated S/G level to acceptable limits?

A. Unisolate and Steam the ruptured S/G to the condenser.

B. Align and open S/G blowdown to the Monitor Storage tanks.

C. Depressurize the RCS to less than the ruptured S/G pressure.

D. Align and open S/G blowdown to the Aerated Waste Storage tanks.

A. Incorrect, used only if not desired to backflow to RCS. (not preferred)

B. Incorrect, used only if not desired to backflow to RCS. (not preferred)

C. Correct

D. Incorrect, this lineup not used anymore (pre blowdown building lineup)

Question Level: 1
Question Source: New
Exam: Both
K/A: 000038.EA1.11
Importance: 3.8/3.9
References:1-EOP-04 SGTR

St. Lucie Plant Post-Written Examination Comments
Examination Administered 5/21/01

Question RO 94, SRO 74

The stem of the question asks for initial plant response and all of the distracters ask for the initial contribution of negative reactivity.

To discriminate between answers B and D, the candidate must assume a value for MTC. Although the stem clearly identifies that the plant conditions are "beginning of core life", it does not identify whether MTC is positive or negative (nor does it provide a power level to help discriminate). St. Lucie plants can have +MTC at low power at the beginning of core life. This information is critical to discriminating between answers B and D.

This question describes a Loss of Feedwater ATWS event. The initial plant response to this transient will be the same as the non-ATWS event before the reactor trip. The key issue is that the change in reactivity is due to an event external to the reactor. As such, the physical change to the moderator is the first event which can change reactivity.

RCS hot leg temperature is initially constant but RCS cold leg temperature increases. The initial reactivity change will be determined by MTC. There are two cases, positive and negative. (Refer to the attached documentation for additional information on the expected RCS temperature response: a. Combustion Engineering Emergency Procedure Training Materials, "Loss of Feedwater Lesson, pages 2-2, 2-3, and Figure 7", CEOG,
b. Post-TMI Reactor Operation Training Materials – Lesson Plans for Transients and Accidents {CEN-128}, pages 3-1, slide 15, CEOG)

Case 1: Negative MTC
As RCS cold leg temperature increases, negative reactivity is inserted into the core. Physically fewer neutrons are available to cause fission. If MTC is negative, then the first negative reactivity will be due to RCS temperature effects.

Conclusion: Answer B is correct.

Case 2: Positive MTC
As RCS cold leg temperature increases, positive reactivity is added to the core so more neutrons are available to cause fission. More energy is generated in the fuel pin causing fuel temp to increase. This immediately inserts negative reactivity. So although the change in RCS temperature inserts the first reactivity, it is the resultant fuel temperature increase that inserts the first negative reactivity. If MTC is positive, then the first negative reactivity will be due to fuel temp effects.

Conclusion: Answer D is correct.

Recommendation: Accept B and D as correct responses.

Question RO 94, SRO 74

A loss of Feedwater has occurred at beginning of core life. Steam Generator levels are 15% Narrow range and all CEA's are fully withdrawn.

As S/G levels continue to lower and CEA's remain fully withdrawn, which of the following explains the initial plant response?
(assume Turbine is tripped)

A. RCS pressure will increase and will be the initial contributor to adding negative reactivity.

B. RCS temperature will increase and will be the initial contributor to adding negative reactivity.

C. RCS void fraction will develop and will be the initial contributor to adding negative reactivity.

D. Fuel temperature will increase and will be the initial contributor to adding negative reactivity.

A. Incorrect, pressure will increase and add slight positive reactivity.

B. Incorrect, fuel heats up first and will be the initial negative feedback response

C. Incorrect, as RCS becomes saturated void fraction will eventually develop but is not the initial plant response and is not the initial contributor.

D. Correct

Question Level: 1
Question Source: New
Exam: Both
K/A: 000029.EK1.05
Importance: 2.8/3.2
References: 0711100-11 Chapter 7 Fundamentals

2.0 EVENT CHARACTERISTICS

This section discusses the major plant parameter trends during LOFW events using the complete loss of normal feedwater as an example to typify the sequence of events, system availabilities, and plant parameter trends for all LOFW events. The general trends stated in this section apply to all types of LOFW events. Specific parameter trends of other types of LOFW events are provided in section 6.0 of this text. The progression of the LOFW transient is affected by the assumed initial plant conditions and status of control systems. Therefore a discussion of how these factors affect the sequence of events is also provided in this section.

2.1 Assumptions and Initial Conditions

The following key initial plant conditions are assumed for the complete loss of normal feedwater flow event presented:

Power Level %	100
Pressurizer Pressure, psia	2250
Pressurizer Level, %	[55]
Steam Generator Pressure, psia	[1070]
Steam Generator Level, % WR	[84]
Core Flow Rate, % Design	100
Core Inlet Temperature, °F	[565]
Core Outlet Temperature, °F	[621]

For this discussion, a best estimate plant response with no equipment failures in either safety or non-safety grade systems is assumed. All control systems, except the [Reactor Regulating System, the Reactor Power Cutback System, and the Atmospheric Steam Dump System] are assumed to be in the automatic mode.

2.2 LOFW Transient Characteristics

Following the loss of normal feedwater flow, steam generator level decreases and steam generator pressure increases. This in turn forces the reactor coolant to heat up and expand, raising the pressurizer level and pressure. These trends will continue until a reactor trip is generated on low steam generator level. After the reactor/turbine trip, pressurizer level and pressure, and RCS temperatures will decrease. Steam generator pressure will increase until it is controlled by the [SBCS]. Steam generator level decreases until it is replenished by [auxiliary feedwater]. [If the steam generator level is not increasing and the [auxiliary feedwater] actuation signal has been generated then two reactor coolant pumps (RCP) in opposite loops may be tripped to reduce heat input to the RCS].

Feedwater entering a steam generator under normal full power conditions is usually [100°F] subcooled. Approximately [15%] of the RCS-to-steam generator heat transfer is being used to heat this subcooled feedwater to saturated liquid conditions. With the termination of feedwater flow, an additional [15%] of the RCS-to-steam generator heat transfer is now available to further heat the fluid in the tube bundle region. As a result, an increase in the boiling rate occurs. Because the rate of steam exiting the tube bundle region increases without an increase in the rate of steam exiting the generators, steam generator pressure increases.

The RCS-to-steam generator heat transfer rate can be quantified by the relation:

$$\dot{Q}_{RCS} = UA\,\overline{\Delta T}$$

where $\dot{Q}_{RCS}$ is the rate of energy transfer from the RCS to the steam generators, Btu/hr.

U is the overall heat transfer coefficient, Btu/hr ft^2°F

A is the area available for heat transfer from the RCS to the steam generators, ft^2

$\overline{\Delta T}$ is an average temperature difference between the RCS and steam generators, °F

In this equation, the U and A terms will remain essentially constant until the steam generator starts to dry out. The increasing steam generator pressure increases the average steam generator temperature. The increase in steam generator temperature reduces the average temperature difference between the RCS and steam generators, causing a reduction in the rate of heat transfer from the RCS. The reduction in the heat transfer rate in turn raises the RCS cold leg temperature. When this warmer cold leg temperature reaches the core and is heated, the RCS hot leg temperature increases. (Note that beginning of cycle conditions are assumed in this discussion, minimizing moderator reactivity feedbacks that could reduce core power. If other times of life were assumed, the reduction in core power would reduce the increase in hot leg temperature). With increasing steam generator pressures and temperatures, the RCS temperatures will continue to increase until a reactor trip occurs.

For the loss of feedwater event presented in this section, it is assumed that, while the plant is operating at full power, the complete loss of normal feedwater flow to both steam generators occurs. The chronology of this event is provided below:

EVENT

Complete loss of normal feed to both steam generators

Reactor Trip on low steam generator level

Turbine Trip on Reactor Trip

[Steam Bypass] valves open

Backup charging pumps and heaters on, pressurizer low level error minimizes letdown

Pressurizer low level signal turns heaters off

[Auxiliary feedwater actuation signal] generated on low steam generator level

[Auxiliary feedwater] reaches steam generators

[Two RCPs in opposite loops tripped]

Pressurizer low level heater cut-off removed

Letdown control valves start to open, backup charging pump off

Backup heaters off

[Auxiliary feedwater automatically] terminated

For the remainder of this subsection, detailed descriptions of the important parameter trends following for the complete loss of main feedwater flow are provided (see Figures 2 through 11).

Following the complete loss of main feedwater, steam generator level may undergo a brief increase before decreasing. The increase is due to the decrease of the average density of the fluid in the tube bundle region caused by the increased boiling rate. As the average density decreases in the tube bundle region, the vapor mixture contained within the tube bundle region expands. This expansion forces coolant through the steam separators and into the downcomer, raising steam generator level.

The duration of this level swell is short. In fact, it does not appear on the steam generator level vs. time plot provided in Figure 2 due to the long time frame chosen (20 minutes). Steam is exiting a steam generator at a rate of about [9 million lbm/hr] with no addition of feedwater. This causes steam generator inventory depletion, and a reduction in level.

The steam generator level continues to decrease as shown in Figure 2 until a low steam generator level reactor trip is generated at [45% wide range]. Because the initiating event is a complete loss of normal feedwater flow to both steam generators, the event is symmetric. In other words, the steam generator and RCS response are the same for both steam generators and RCS loops. Once the low level reactor trip occurs, the rate of core heat generation is greatly reduced. In turn, this lowers the heat transfer rate from RCS to

FIGURE 7
TOTAL LOSS OF MAIN FEEDWATER FLOW
RCS TEMPERATURES vs TIME

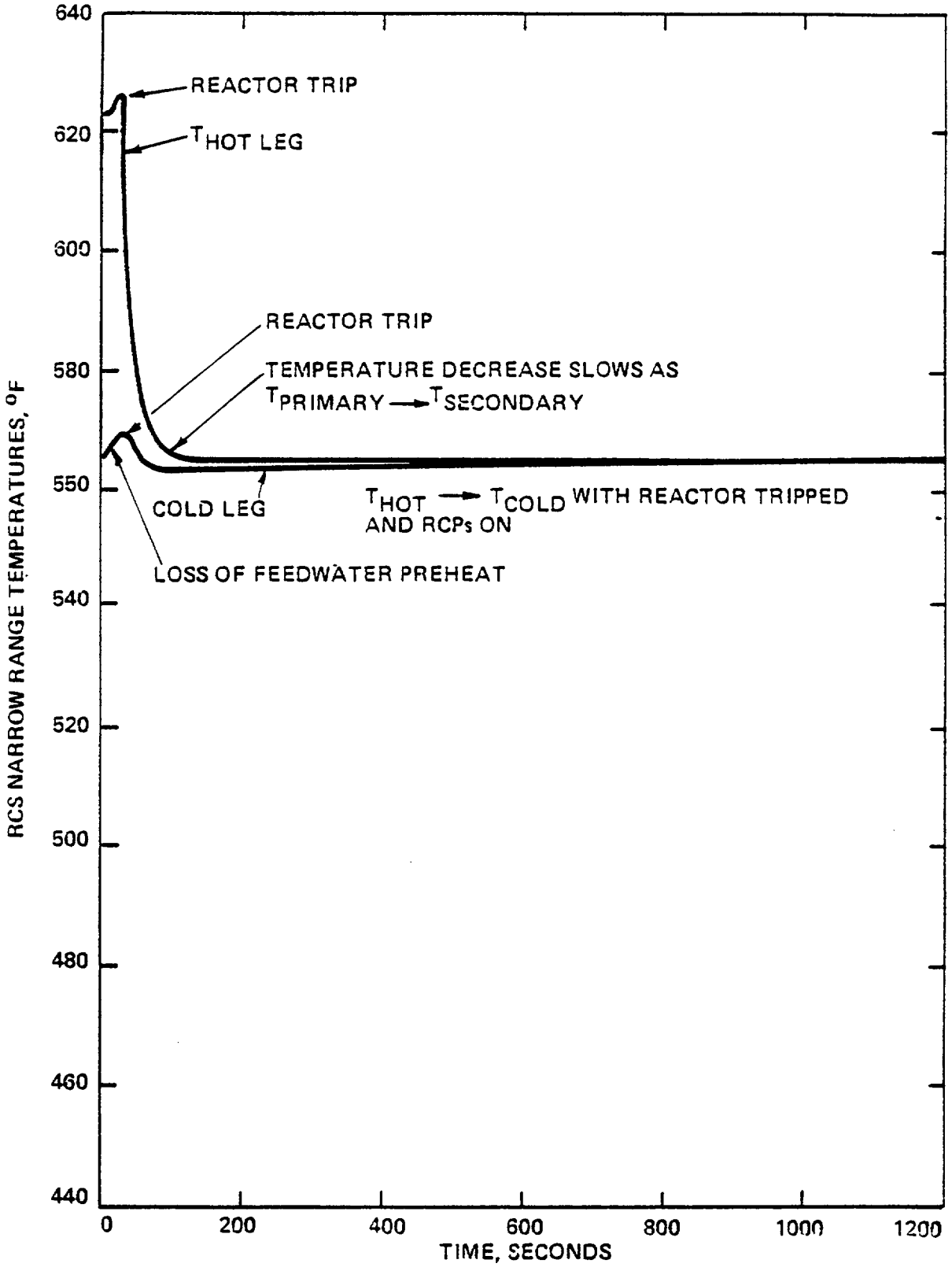

3. SYMPTOMS AND DIAGNOSTICS

Slide 14
Slide 15
Slide 16
Slide 17

3.1 Parameter Trends & Variations

- Steam generator pressure and temperature increase before reactor trip, followed by a decreasing trend on reactor trip, and then a stabilizing trend.
- Pressurizer level, pressure, and temperature increase before reactor trip, due to heatup of RCS.
- Hot leg temperature remains constant but cold leg temperature increases before and right after reactor trip. Both temperatures then decrease and stabilize following the reactor trip.
- Reactor Protection System trip occurs on steam generator low level.
- Decreasing pressurizer level and pressure on reactor trip, followed by an increasing trend within the capability of PLCS.
- Decreasing steam generator water level before auxiliary feedwater reaches the steam generators.
- VCT level decreases due to mismatch between charging and letdown flow rates.

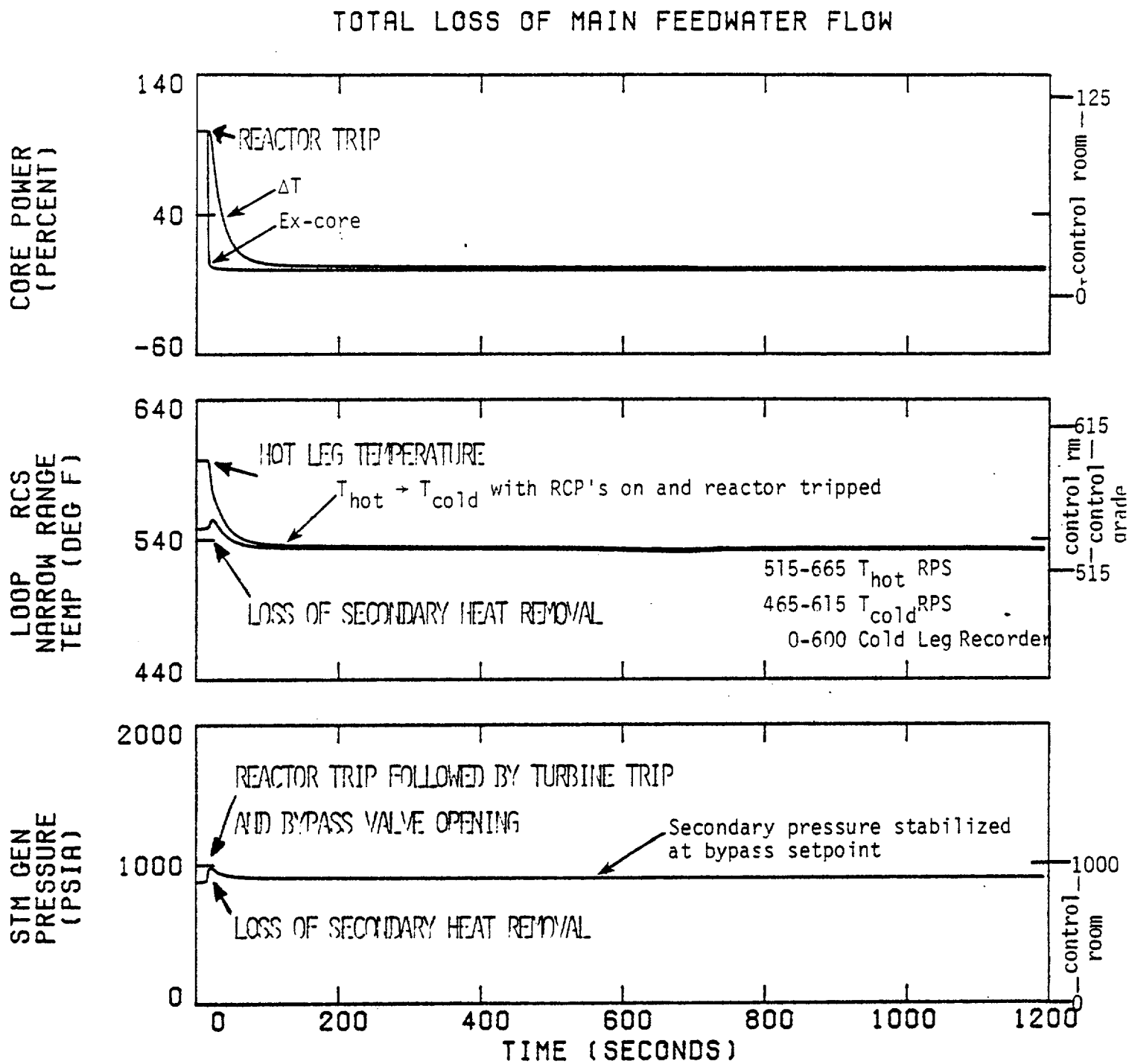
TOTAL LOSS OF MAIN FEEDWATER FLOW
CORE POWER (PERCENT)
140
40
-60
REACTOR TRIP
ΔT
Ex-core
125
0
control room
LOOP RCS NARROW RANGE TEMP (DEG F)
640
540
440
HOT LEG TEMPERATURE
$T_{hot} \rightarrow T_{cold}$ with RCP's on and reactor tripped
LOSS OF SECONDARY HEAT REMOVAL
515-665 T_{hot} RPS
465-615 T_{cold} RPS
0-600 Cold Leg Recorder
615
515
control rm
control grade
STM GEN PRESSURE (PSIA)
2000
1000
0
REACTOR TRIP FOLLOWED BY TURBINE TRIP
AND BYPASS VALVE OPENING
Secondary pressure stabilized at bypass setpoint
LOSS OF SECONDARY HEAT REMOVAL
1000
0
control room
0
200
400
600
800
1000
1200
TIME (SECONDS)

St. Lucie Plant Post-Written Examination Comments
Examination Administered 5/21/01

Question SRO 98

The question asks for the implementation strategy of Off Normal Procedures during Mid Loop conditions. Distractor "A" which states: "Implement SDC ONOP and 2-ONP-01.04 PC-4 *SDC in Operation-Reduced Inventory*. Implement the actions of both procedures until all exit conditions are met" is also correct.

The first step in 2-0440030 directs the operator to perform safety function status checks per Low Mode Off-Normal Procedure Appendix A, for the current plant condition every 15 minutes until exit conditions are met. Essentially both the SDC ONOP and the Low Mode ONOP are implemented together until exit conditions are met.

Distractor 'B' is also correct in that PC-4 Safety Functions are analyzed every 15 minutes and if not met, the SDC ONOP is exited. The stem of the question does not state Safety Functions are not met.

Recommendation: Accept A and B as correct responses.

Question SRO 98

Unit 2 has entered a refueling outage. The Unit was in Mid loop when an unidentified leak occurs in the RCS and level continues to drop. A loss of SDC occurs.

Which of the following explains the procedure implementation strategy?

Implement:

A. SDC ONOP and 2-ONP-01.04 PC-4 'SDC In Operation-Reduced Inventory'. Implement the actions of both procedures until all exit conditions met.

B. SDC ONOP and 2-ONP-01.04 PC-4 'SDC In Operation-Reduced Inventory'. If any Safety Functions not met in PC-4, exit SDC ONOP within 15 minutes and continue with PC-4.

C. 2-ONP-01.04 PC-4 'SDC In Operation-Reduced Inventory.' If any Safety Functions not met in PC-4, implement SDC ONOP within 15 minutes.

D. 2-ONP-01.04 PC-4 'SDC In Operation-Reduced Inventory.' If all Safety Functions met, exit PC-4 and implement SDC ONOP.

A. Incorrect, exit SDC ONOP within 15 minutes of PC-4 safety functions not met.

B. Correct, inventory control will not be met in PC-4

C. Incorrect, SDC ONOP should be exited for this condition due to not meeting safety functions.

D. Incorrect, backwards logic.

Question Level: 1
Question Source: New
Exam: SRO
K/A: 2.4.9
Importance: 3.9
References 2-0440030 SDC Off-Normal, 2-ONP-01.04 PC-4 'SDC In Operation-Reduced Inventory

3.0 REFERENCES: (continued)

§7 3.21 JPN-PSL-SEMP-91-029, Rev 0, Engineering Evaluation of Shutdown Cooling System Transient Response.

3.22 2-MMP-68.02, Emergency Closure of Containment Penetrations, Personnel Hatch, and Equipment Hatch.

4.0 RECORDS REQUIRED:

The completed (signed off) portion of this procedure, including applicable Appendixes (with sign offs), Data Sheets, or Figures shall be maintained in the plant files in accordance with QI-17-PSL-1, "Quality Assurance Records."

5.0 ENTRY CONDITIONS:

5.1 Shutdown cooling is lost or degraded as indicated by one or more of the following:

1. Loss of shutdown cooling flow.
2. Increasing shutdown cooling temperature.
3. Closure of hot leg suction valves (High RCS pressure).
4. Fluctuating LPSI pump amps.

6.0 EXIT CONDITIONS:

6.1 Any of the Safety Function Status Checks Acceptance Criteria from the Low Mode Off-Normal Procedures for the current plant condition are NOT met.

OR

6.2 Normal decay heat removal is established with the Shutdown Cooling System.

OR

6.3 Decay heat removal is accomplished via the S/Gs.

AND

6.4 An approved procedure is available for implementation.

7.0 OPERATOR ACTIONS: (continued)

7.2 Subsequent Operator Actions:

INSTRUCTIONS	CONTINGENCY ACTIONS

NOTE

If conditions continue to degrade or this procedure is NOT succeeding in stabilizing plant conditions, the Low Mode Off-Normal Procedure (LMONP) for the current plant condition should be implemented.

1. Perform safety function status check per Low Mode Off-Normal Procedure, Appendix A, for the current plant condition every 15 minutes until exit conditions are met.

2. Record the time SDC was lost and RCS temperature on Data Sheet 1.

CAUTION

- If LPSI pump is lost due to level dropping below 29 ft, 9.7 inches, do NOT attempt to restart the LPSI pump until the cause has been identified and corrected.
- If SDC is lost, it may be necessary to isolate the tygon level hose to prevent overpressurizing the hose.

3. Check Core Alterations NOT in progress.	3. Stope Core Alterations.

5.0 ENTRY CONDITIONS: (continued)

3. Any of the following conditions exist.

   A. Shift Supervisor directs that LMONP be entered.

   B. LMONP Safety Function Status Checks for the current plant conditions are NOT being met.

   C. Off-Normal Operating Procedure NOT adequately mitigating the event.

   D. Any condition, or pattern of symptoms, with no immediately apparent diagnosis or cause OR for which off-normal guidance can NOT be identified.

6.0 EXIT CONDITIONS:

1. Appropriate acceptance criteria are met as indicated by either of the following conditions:

   A. The plant meets safety function acceptance criteria for the original plant condition prior to the event:

      1. Plant parameters still meet the definition of the original plant condition.

      2. The safety function acceptance criteria for the original plant condition prior to the event are being satisfied.

OR

   B. The plant has changed such that a new plant condition is applicable:

      1. The plant meets the definition of a plant condition other than the original plant condition.

      2. The safety function acceptance criteria for this plant condition are being satisfied.

AND

2. An appropriate, approved procedure to perform exists or has been approved by the Plant Technical Support Center.