KEY #: P002368
10

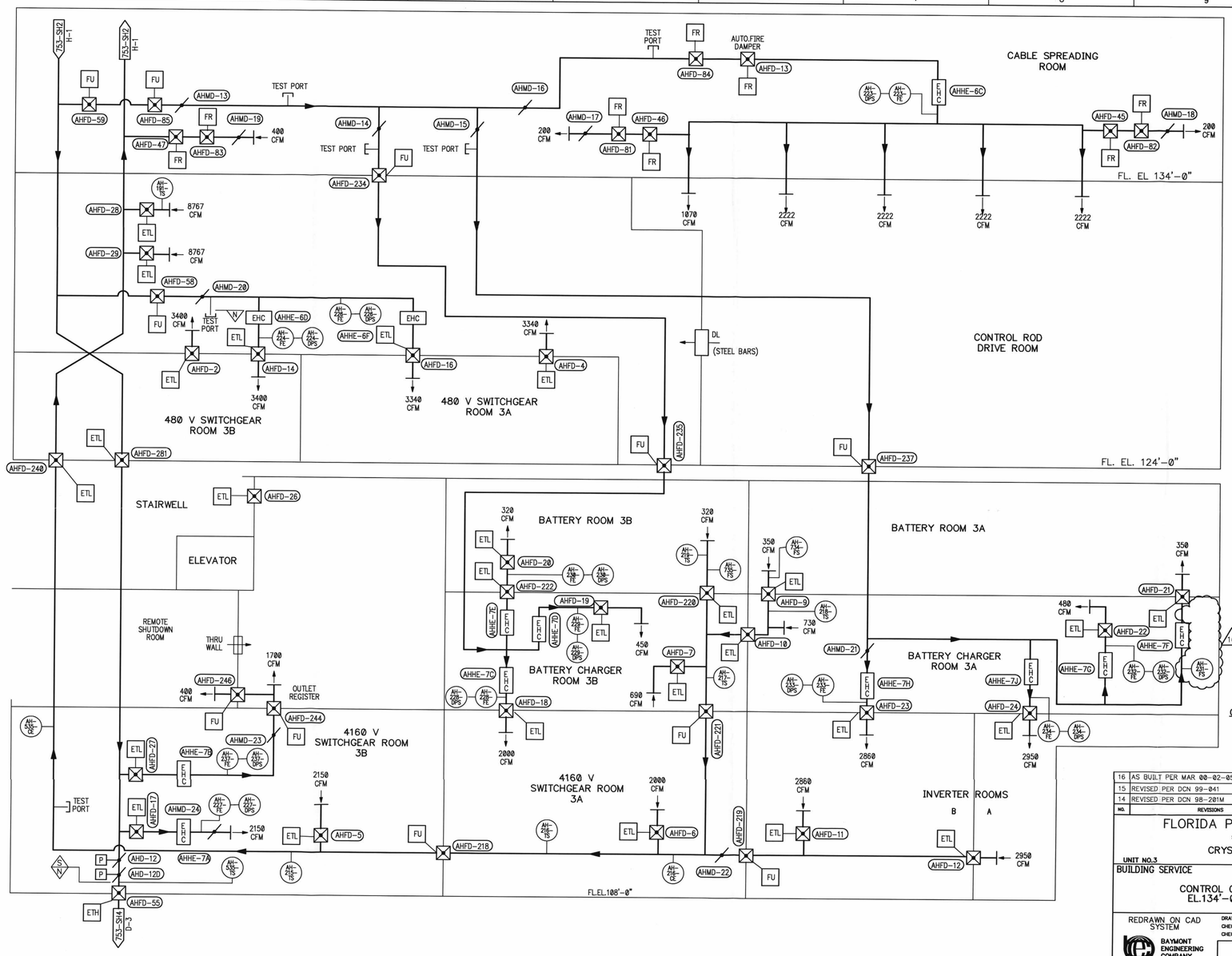

FOR LEGEND & NOTES SEE SHT. 1

CAUTION:
302 DRAWINGS MAY NOT REFLECT ACTUAL VALVE POSITIONS IN THE PLANT. VALVE POSITIONS ARE CONTROLLED THROUGH OPERATING PROCEDURES. NOCS (62846)

NO.	REVISIONS	BY	CHECKED	APPROVED	DATE
16	AS BUILT PER MAR 00-02-05-01	TDF			
15	REVISED PER DCN 99-041	CSS	KLM	GEE	4-28-99
14	REVISED PER DCN 98-201M	MAD	TMD	CSS	9-14-98

FLORIDA POWER CORPORATION
ST. PETERSBURG, FLORIDA

CRYSTAL RIVER PLANT

UNIT NO.3 — 855,000 KW

BUILDING SERVICE — FLOW DIAGRAM

CONTROL COMPLEX VENTILATION
EL.134'-0",124'-0" & 108'-0"

FSAR FIG. 9-13(3OF4)

REDRAWN ON CAD SYSTEM

DRAWN BY: DATE:
CHECKED BY: DATE:
CHECK VERIFIED: DATE:

BAYMONT ENGINEERING COMPANY

SCALE | DRAWING NUMBER: FD-302-753 SHEET 03 OF 04 | REV. 16

FILE: 302753.DWG

D-9-8

D-3