NMC
Committed to Nuclear Excellence

Point Beach Nuclear Plant
Operated by Nuclear Management Company, LLC

NRC 2001-039

10 CFR 50.90

June 13, 2001

Document Control Desk
U.S. Nuclear Regulatory Commission
Mail Stop P1-137
Washington, DC 20555

Ladies/Gentlemen:

DOCKETS 50-266 AND 50-301
SUPPLEMENT 13 TO APPLICATION FOR AMENDMENT TO
FACILITY OPERATING LICENSE APPENDIX A:
TECHNICAL SPECIFICATIONS IMPROVEMENT PROJECT
COMMENTS ON DRAFT SAFETY EVALUATION
POINT BEACH NUCLEAR PLANT, UNITS 1 AND 2

On November 15, 1999, Wisconsin Electric Power Company (WE), then licensee for the Point Beach Nuclear Plant (PBNP), submitted an application to amend Appendix A, Technical Specifications, for Facility Operating Licenses DPR-24 and DPR-27 for Point Beach Nuclear Power Plant, Units 1 and 2, respectively (reference letter NPL 99-0669). The application proposed to convert the Point Beach Current Technical Specifications (CTS) to the Point Beach Improved Technical Specifications (ITS). That application contained documentation for ITS Chapters 1.0 and 2.0 and Sections 3.0 through 3.9. Documentation for ITS Chapters 4.0 and 5.0 was enclosed with Supplement 1 to the PBNP ITS submittal dated March 15, 2000 (reference letter NPL 2000-0142).

In a letter dated May 9, 2001, the NRC staff requested comments on the draft safety evaluation (SE), for the conversion of the CTS to the ITS, enclosed with that letter. Additionally, during a phone call on May 31, 2001, NRC staff requested that clarifying information be added to the Bases for ITS 3.7.8, Service Water. Separately, NMC staff proposed an editorial clarification to ITS 3.8.1 Required Action G.

Attachment 1 of this letter includes the NMC comments on the draft SE. Attachment 2 contains the revised ISTS markup and ITS clean pages.

A001

6590 Nuclear Road • Two Rivers, Wisconsin 54241
Telephone: 920.755.2321

The changes required to the NUREG markups and clean ITS are identified as follows (example):

G

The revision bar identifies the section that has been revised; the G in the triangle identifies revision G. The old pages in the original submittal should be replaced with the new pages enclosed with this letter, following the instructions in attachment 2.

NMC has determined that this supplement does not involve a significant hazards consideration, authorize a significant change in the types or total amounts of effluent release, or result in any significant increase in individual or cumulative occupational radiation exposure. Therefore, NMC concludes that the proposed supplement meets the categorical exclusion requirements of 10 CFR 51.22(c)(9) and that an environmental impact appraisal need not be prepared.

NMC is notifying the State of Wisconsin of this supplement by transmitting a copy of this letter, and its attachments, to the Public Service Commission of Wisconsin.

Other supplements to the PBNP ITS submittal, in response to previous RAIs, are listed for reference:

- Supplement 2 dated June 15, 2000 (ITS sections 2.0, 3.1, 3.2, 3.5; letter NPL 2000-0260)
- Supplement 3 dated June 19, 2000 (ITS section 3.6; letter NPL 2000-0271)
- Supplement 4 dated July 28, 2000 (ITS section 3.8; letter NPL 2000-0341)
- Supplement 5 dated August 17, 2000 (ITS sections 3.4, 3.9; letter NPL 2000-0371)
- Supplement 6 dated September 14, 2000 (ITS section 5.5; letter NPL 2000-0411)
- Supplement 7 dated October 19, 2000 (ITS sections 3.6, 3.7.4, 3.7.5; letter NPL 2000-0465)
- Supplement 8 dated December 21, 2000 (ITS section 1.0; letter NPL 2000-0549)
- Supplement 9 dated February 6, 2001 (ITS sections 3.3.1 and 5.0; letter NPL 2001-0032)
- Supplement 10 dated February 23, 2001 (ITS section 3.7; letter NRC 2001-0004)
- Supplement 11 dated March 19, 2001 (ITS sections 3.3.2-3.3.5; letter NRC 2001-0010)
- Supplement 12 dated May 11, 2001 (ITS sections 3.3, 3.7, 3.8 followup; letter NRC 2001-032)

To the best of my knowledge and belief, the statements contained in this document are true and correct. In some respects, these statements are not based entirely on my personal knowledge, but on information furnished by cognizant NMC employees, contractor employees, and/or consultants. Such information has been reviewed in accordance with company practice, and I believe it to be reliable.

Should you have any questions on this submittal or require additional information, please contact me.

Sincerely,

Richard A. Wenda

FOR Mark Reddemann
Site Vice President

Subscribed to and sworn before me
on this 13th day of June, 2001

Patricia A. Hendrie
Notary Public, State of Wisconsin

My Commission expires on September 16, 2001.

JG/jlk

Attachments

Enclosure

cc: NRC Regional Administrator
NRC Resident Inspector
NRC Project Manager
PSCW

DOCKETS 50-266 AND 50-301
RESPONSE TO REQUEST FOR ADDITIONAL INFORMATION
TECHNICAL SPECIFICATIONS IMPROVEMENT PROJECT
COMMENTS ON DRAFT SAFETY EVALUATION
POINT BEACH NUCLEAR PLANT UNITS 1 AND 2

The following information is provided in response to the Nuclear Regulatory Commission staff's requests for comments on the draft safety evaluation (SE), provided in a letter from the NRC dated May 9, 2001.

Safety Evaluation

Comments on the draft SE are provided below. The pertinent sections of the draft SE are reproduced with proposed additions underlined and proposed deletions marked with strike-outs.

The change to the service water ITS Bases only provides amplifying information regarding allowable alignments of the service water ring header and removes a duplicate word. The change to ITS 3.8.1, Required Action G, is editorial. Neither change impacts the SE or the associated Tables.

Draft SE page 1:

1.0 INTRODUCTION

Point Beach Nuclear Plant, Units 1 and 2 (Point Beach) has been operating with Technical Specifications (TS) issued with the original operating licenses on October 5, 1970, for Unit 1 and March 8, 1973, for Unit 2, as amended. By letter dated November 15, 1999, as supplemented by letters dated March 15, ~~March 20,~~ June 15, June 19, July 28, August 17, September 14, October 19 and December 21, 2000, February 6, February 23, March 19, ~~May 7,~~ May 11 and June 13, 2001, Nuclear Management Company, LLC (NMC) (Wisconsin Electric Power Company (WEPCo)[1] prior to ~~October 5~~ August 7, 2000), the licensee, proposed to convert the current Technical Specifications (CTS) to improved Technical Specifications (ITS). The conversion is based upon:

Draft SE page 3 (Table 1):

Date of the NRC transmittal of revised Bases for CTS 15.3.1.B was 12/14/00 (vice 10/10/00).

Additionally, Amendments 200 and 205 for Units 1 and 2 respectively were approved May 8, 2001. This information needs to be appended to Table 1 as shown below.

200	205	Revised Individual Rod Position Indication (IRPI) limits	5/08/01

Draft SE page 4:

June 21, July 3, August 17 and 24, September 8, November 6, 17 and 20, 2000, and January 25, 2001. The staff also sent NMC a letter January 31, 2001, regarding a change in the review schedule.

Draft SE page 7:

In its review, the NRC staff identified the need for clarifications and additions to the November 15, 1999, ITS application in order to establish an appropriate regulatory basis for translation of CTS requirements into ITS. The NRC staff's comments were documented as requests for additional information (RAIs) and forwarded in letters dated April 19, May 5, May 15, June 21, July 3, August 17, August 24, September 8, November 6, November 17, and November 20, 2000, and January 25, ~~. . ., and . . .,~~ 2001. The licensee provided responses to the RAIs in letters dated June 15, June 19, July 28, August 17, September 14, October 19, December 21, 2000, February 6, February 23, March 19, ~~May 7,~~ May 11, and June 13, 2001. The letters clarified the licensee's bases for translating the CTS requirements into ITS. The NRC staff finds that the licensee's submittals, including the responses to the RAIs, provide

Draft SE page 16:

E. Relocated Specifications (R) from the CTS

The Final Policy Statement states that LCOs and associated requirements that do not satisfy or fall within any of the four specified criteria (now contained in 10 CFR 50.36) may be relocated from existing TS (an NRC-controlled document) to appropriate licensee-controlled documents. This section of the SE discusses the relocation of entire specifications in the CTS to licensee_controlled documents. These specifications include the LCOs, Action Statements (i.e., Actions), and associated SRs. In its application and its supplements, the licensee proposed relocating such specifications from the CTS to the FSAR, which ~~includes~~ references the TRM, the ~~Process Control Program (PCP)~~ Environmental Manual (EM), and the ODCM, as appropriate. The staff has reviewed the licensee's submittals, and finds that relocation of these requirements to the FSAR, TRM, ~~PCP~~ EM, and ODCM is acceptable in that changes to the FSAR, TRM, ~~PCP~~ EM, and ODCM will be adequately controlled by 10 CFR 50.59, 10 CFR 50.54(a), 10 CFR 50.55a, and ITS 5.5.1 as applicable. These provisions will continue to be implemented by appropriate station procedures (i.e., operating procedures, maintenance procedures, surveillance and testing procedures, and work control procedures).

Draft SE page 18:

4. Steam Generator (SG) Pressure - Temperature (P/T) Limit

The relocation of the CTS requirements for the SG P/T limit is addressed in DOC 3.4.3-R1 and in ITS application cover letter Appendix A, Justification 4. CTS requirements for the SG P/T limit are found in CTS 15.3.1.B.2 and 15.4.1.A, Table 15.4.1-1 Item 10, check (note 16), and calibration~~, and test (note 1)~~ of SG pressure instrumentation.

Draft SE page 23:

The relocated specifications from the CTS discussed above are not required to be in the TS because they do not fall within the criteria for mandatory inclusion in the TS as stated in 10 CFR 50.36(c)(2)(ii). These specifications are not needed to obviate the possibility that an abnormal situation or event will give rise to an immediate threat to the public health and safety. In addition, the NRC staff has concluded that appropriate controls have been established for all of the current specifications and information that are being moved to the FSAR, TRM, ODCM, ~~PCP~~ EM or IST Program. These relocations are the subject of a new license condition discussed in Section 5.0 of this SE. Until incorporated in licensee-controlled documents, changes to these specifications and information will be controlled in accordance with the current applicable procedures and regulations that control these documents. Following implementation, the NRC may audit the removed provisions to ensure that an appropriate level of control has been achieved. The NRC staff has concluded that, in accordance with the Final Policy Statement, sufficient regulatory controls exist under the regulations, particularly 10 CFR 50.59 and 10 CFR 50.55a. Accordingly, the specifications and information, as described in detail in this SE, may be relocated from the CTS and placed in the licensee-controlled documents identified in the licensee's application dated November 15, 1999, as supplemented by letters dated March 15, ~~March 20,~~ June 15, June 19, July 28, August 17, September 14, October 19 and December 21, 2000, February 6, February 23, March 19, ~~May 7,~~ May 11 and June 13, 2001.

F. Control of Specifications, Requirements, and Information Relocated from the CTS

In the ITS conversion, the licensee will be relocating specifications, requirements, and detailed information from the CTS to licensee-controlled documents outside the CTS. This is discussed in Sections 3.0.D and 3.0.E above. The facility and procedures described in the FSAR, and TRM, which is ~~a part of~~ incorporated by reference in the FSAR, can only be revised in accordance with the provisions of 10 CFR 50.59, which ensures records are maintained and establishes appropriate control over requirements removed from the CTS and over future changes to the requirements. Other licensee-controlled documents contain provisions for making changes consistent with applicable regulatory requirements. For example, the Offsite Dose Calculation Manual can be changed in accordance with ITS 5.5.1, and the administrative instructions that implement the QA Plan can be changed in accordance with 10 CFR 50.54(a) and 10 CFR Part 50, Appendix B. The documentation of these changes will be maintained by the licensee in accordance with the record retention requirements specified in the licensee's QA Plan for Point Beach and such applicable regulations as 10 CFR 50.59.

Draft SE page 24:

The license condition for the relocation of requirements from the CTS, which is discussed in Section 5.0 of this SE, will address the implementation of the ITS conversion, and the schedule for the relocation of the CTS requirements into licensee-controlled documents. The relocations to the FSAR, which includes the TRM, shall be included in the next required update of ~~this document~~ the FSAR in accordance with 10 CFR 50.71(e).

Draft SE page 26:

The licensee proposed a Channel Check, ITS SR 3.3.3.1, and a Trip Actuating Device Operational Test (TADOT), SR 3.3.3.4 for the Containment Isolation Valve (CIV) Position Indication PAM instrumentation function. CTS Table 3.5-5 requires PAM CIV Position Indication to be operable to provide required information to the operators during accident situations; however, there is no surveillance requirement (SR) stated for PAM CIV Position Indication in Table 4.1-1 in the CTS. ITS SR 3.3.3.1 requires the channel check every 31 days. ITS SR 3.3.3.4 requires the performance of a TADOT every 18 months. These surveillances are proposed to replace the STS surveillance requirement to perform Channel Calibration on the PAM CIV Position Indication. The TADOT would consist of verifying the valve position indication against the actual position because the CIV Position Indication has limit switches with no required range or accuracy and is used for indication only. The staff finds the proposed change to be acceptable, because this is more restrictive than the CTS which specifies no surveillance requirements and because the STS requirement is not appropriate.

5. ITS 3.3.~~5~~4 (STS 3.3.5) Revised Action Requirements for LOP DG Start and Load Sequence Instrumentation Functions (Beyond Scope Change 30) (DOCs L3 and M1, and JFD 3)

Draft SE page 27:

- ~~Revise CTS Table 15.3.5-3, Note**. This note allows power operation to continue when a channel is determined to be inoperable if the minimum number of channels are operable and the inoperable channel is placed in trip within 1 hour. This note is revised in the associated required actions of ITS 3.3.4, Condition A, to require an inoperable channel to be placed in the tripped condition within 6 hours. The 6-hour completion time is less restrictive, but is in accordance with the STS and is acceptable.~~

- ~~Revise CTS Table 15.3.5-3, Note## items 4.a.i, 4.a.ii, and 4.b.i. This note allows an inoperable channel to be bypassed for up to 4 hours for surveillance testing of other channels. This note, which corresponds to the note to ITS 3.3.4, Required Action A.1, relaxes the requirement for an inoperable channel to be in the tripped condition, but is in accordance with the STS and is acceptable.~~

[Note: these originally proposed changes were deleted in response to NRC RAI questions 3.3.5-1 and 3.3.5-2.]

Draft SE page 28:

- ITS 3.3.4 Required Action A.1 requires placing an inoperable channel in trip within ~~6~~ 1 hours. The bases discussion of Required Action A.1 states: "With a channel in trip, the LOP DG start and load sequence instrumentation channels are configured to provide a one-out-of-~~three~~two logic to initiate a trip..." This statement has been revised to reflect the fact that with one of three channels in trip, the instrument channels are actually in a "one-out-of-two" logic configuration to initiate a trip.

- References to "trip setpoint" in ~~the~~ ITS ~~3.3.4 bases~~ SR 3.3.4.3 are eliminated. The setpoint methodology at Point Beach uses allowable values derived from the analytical limits in the safety analysis, is consistent with the STS, and is acceptable.

- The bases for ITS 3.3.4 discusses LOP start on loss of voltage or degraded voltage "~~in the switchyard~~on the safeguards bus." These bases have been modified to reflect Point Beach design. The LOP start is generated on a loss-of-voltage or degraded voltage condition on the safeguard buses, and the deviation is acceptable.

- The ITS definition of the trip actuating device operational test (TADOT) has been revised to eliminate verification of the setpoint because the current CTS does not have this requirement. Therefore, the ITS SR 3.3.4.2 bases have been modified to reflect this change.

The STS 3.3.5, "Loss of power (LOP) diesel generator (DG) and load sequence instrumentation," is being adopted as ITS 3.3.4. The STS 3.3.4, "Remote Shut-down System," has not been adopted as part of the Point Beach's conversion to the ITS, because the Point Beach CTS does not contain any specifications which require operability of instrumentation or controls associated with the Remote Shutdown Panel. Therefore, since the Remote Shutdown System Specification is not adopted as part of the Point Beach's conversion to the ITS, the STS 3.3.5 is renumbered as 3.3.4. This is acceptable. Also, the STS title of ~~License~~Limiting Condition for Operation (LCO) 3.3.5, "LOP DG Start Instrumentation," has been changed to "LOP DG Start and Load Sequence Instrumentation," in ITS 3.3.4 to more accurately reflect the functions of the 4.16 kV Degraded Voltage and 4.16 kV and 480

Draft SE page 36:

- The proposed ITS SR 3.7.5.5 conditions performance of the AFW flow path alignment verification "prior to Thermal Power exceeding ~~5%~~2% RTP" instead of "prior to entering Mode 2" as specified in STS, and

- The proposed ITS SR 3.7.5.2 ~~and 3.7.5.4~~ Note~~s~~ differs from STS by allowing turbine driven pump flow (head) test and start test to be performed 24 hours after Thermal Power ~~≥5%~~ exceeds 2% RTP instead of "~~within~~until 24 hours after ≥ 1000 psig in the steam generator."

The licensee stated that only the motor driven AFW pumps use the "train" designation. The turbine driven pump system is not referred to as a train. As such, the licensee has determined that referring to AFW pump systems rather than AFW trains reflects the actual configuration of the AFW system at Point Beach. The licensee proposed that ITS 3.7.5 state that "The AFW System shall be OPERABLE with: one turbine driven AFW pump system and two motor driven AFW pump systems." The staff finds the proposed change of nomenclature acceptable.

Draft SE page 37:

15. ITS 3.7.9 Additional Surveillance Requirement for CREFS (Beyond Scope Change 78) (DOC 3.7.10 - M3) (JFD 3.7.10 - 1 and 6)

Draft SE page 37:

17. ITS 3.9.5 Addition of Surveillance Requirement to Verify One RHR Loop is in Operation in Mode 6 (Beyond Scope Change 95) (DOC M3 and JFD 4)

The CTSs do not have a SR that addresses RHR flow in MODE 6. ITS SR ~~3.9.4.1~~ 3.9.5.1 is added to demonstrate that one RHR loop is in operation and circulating reactor coolant.

Draft SE page 38:

18. ITS 5.6.4 COLR (Beyond Scope Change 97) (DOC 3.4.1 LA1)

The licensee submitted a separate application on March 2, 2000, requesting implementation of a Core Operating Limits Report (COLR) concurrent with ITS implementation. Supplement 1 to this application was submitted August 14, 2000. The proposed changes would relocate cycle-specific parameters from the CTS to the COLR and establish administrative control requirements for the COLR, ITS 5.6.4.

Draft SE page 39:

~~RCS flow ≥ 181,800 gpm for cores not containing 422V+ fuel assemblies.~~
RCS flow ≥ 182,400 gpm ~~for cores containing 422V+ fuel assemblies.~~

Draft SE List of Acronyms:

The following acronyms listed in the draft SE are not used at Point Beach and should be deleted from the list.

ATWS-RPT
BPWS
CRACS
FSBEVS
GE
IVSW
LLS
LPCS
NUMAC
RCIC
RSCS
RWCU
RWM
SCIV
SDV

SGT
SLC

The following acronym should be changed as follows.

CW ~~City Water~~ Circulating Water

Draft SE Tables:

Comments to the draft SE Tables, in the form of marked-up draft SE Tables, are enclosed with this letter. The draft SE Tables are as listed below.

Table A – Administrative Changes
Table M – More Restrictive Changes
Table L – Less Restrictive Changes
Table R – Relocated Specifications and Removal Details

REVISED ISTS MARKUP AND CLEAN ITS BASES PAGES

DISCARD AND INSERTION INSTRUCTIONS

VOLUME 8	
SECTION 3.7.8	
DISCARD	INSERT
ISTS Bases Insert B3.7.8-3 (2 pages)	ISTS Bases Insert B3.7.8-3 (2 pages)
ISTS Bases markup page B3.7.8-5	ISTS Bases markup page B3.7.8-5
ITS Bases pages B 3.7.8-4 and B 3.7.8-9	ITS Bases pages B 3.7.8-4 and B 3.7.8-9
VOLUME 9	
SECTION 3.8.1	
DISCARD	INSERT
ISTS markup page 3.8-4	ISTS markup page 3.8-4
ITS page 3.8.1-4	ITS page 3.8.1-4

Insert B 3.7.8-3:

The Actions Table is modified by a Note which requires the applicable Conditions and Required Actions to be entered for the system made inoperable as a result of any SW System inoperability. This is an exception to LCO 3.0.6 and ensures the proper actions are taken for these components.

A.1

If one SW pump is inoperable, action must be taken to restore the pump to OPERABLE status within 7 days. In this Condition, the remaining OPERABLE SW pumps assure adequate system flow capability. However, the overall reliability is reduced because a single failure could result in less than the required number of pumps to assure this flow. The 7 day Completion Time is based on the redundant capabilities afforded by the remaining OPERABLE pumps, and the low probability of a DBA occurring during this time period.

The second Completion Time for Required Action A.1 establishes a limit on the maximum time allowed for any combination of Conditions to be inoperable during any continuous failure to meet this LCO. The 14 day Completion Time provides a limitation on the time allowed in this specified Condition after discovery of failure to meet the LCO. This limit is considered reasonable for situations in which multiple Conditions are entered concurrently. The AND connector between 7 days and 14 days dictates that both Completion Times apply simultaneously, and the more restrictive must be met.

B.1

If two or three SW pumps are inoperable, action must be taken to restore at least the minimum number of pumps to OPERABLE status required to exit this Condition within 72 hours. In this Condition, the remaining OPERABLE SW pumps are capable of providing the required system flow capability provided the requirements of the LCO are met (e.g., SW ring header continuous flowpath, non-essential SW isolation valves and the opposite Unit's containment fan cooler service water outlet valves). With four or more SW pumps inoperable, Condition G must be entered.

D Amend 199/204

G

Insert B 3.7.8-3 (continued):

The 72 hour Completion Time is based on the redundant capabilities afforded by the remaining OPERABLE pumps, the probability for an additional active or passive failure, and the low probability of a DBA occurring during this time period.

C.1 and C.2

If the SW ring header continuous flowpath is interrupted, the ability of the System to provide required cooling water flow to required equipment must be verified within 1 hour. The 1 hour Completion Time for Required Action C.1 effectively limits the allowed system configuration to alignments previously evaluated and found acceptable (Reference 4). Evaluated alignments with the continuous flowpath interrupted include a minimum required number of OPERABLE SW System pumps with each OPERABLE SW pump aligned to all required portions of the SW header. Acceptable alignments must comport to the SW System analyses. Additionally, the 1 hour Completion Time provides sufficient time to accommodate transitory operations (e.g. additional equipment inoperabilities, operations required to realign systems and equipment, etc;) without requiring initiation of a unit shutdown. The 1 hour Completion Time is commensurate with the importance of maintaining the SW System in an OPERABLE configuration.

F Additional change

G

F Additional change

Additionally, Required Action C.2 directs that the SW ring header continuous flowpath must be restored within 7 days. Since acceptable alignments during this period may include less than five OPERABLE SW pumps, Required Action B.1 may limit operation in Condition C to less than 7 days.

G

With one or more ring header isolation valves incapable of being closed, the SW System will continue to be capable of providing the required cooling water flow to required equipment. However, the ability to isolate a break in the system while continuing to provide cooling water to required equipment may be impaired.

BASES

SURVEILLANCE REQUIREMENTS (continued)

4

pass the Surveillance when performed at the [18] month Frequency. Therefore, the Frequency is acceptable from a reliability standpoint.

REFERENCES

1. FSAR, Section ~~[9.2.1]~~. 9.6.
2. FSAR, Section ~~[6.2]~~. 14.3.4 4
3. FSAR, Section ~~[5.4.7]~~ 9.2

G

4. Technical Requirements Manual, TLCO 3.7.7, SW System

BASES

ACTIONS (continued) valves and the opposite Unit's containment fan cooler service water outlet valves). With four or more SW pumps inoperable, Condition G must be entered. G

The 72 hour Completion Time is based on the redundant capabilities afforded by the remaining OPERABLE pumps, the probability for an additional active or passive failure, and the low probability of a DBA occurring during this time period.

C.1 and C.2

If the SW ring header continuous flowpath is interrupted, the ability of the System to provide required cooling water flow to required equipment must be verified within 1 hour. The 1 hour Completion Time for Required Action C.1 effectively limits the allowed system configuration to alignments previously evaluated and found acceptable (Reference 4). Evaluated alignments with the continuous flowpath interrupted include a minimum required number of OPERABLE SW pumps with each OPERABLE SW pump aligned to all required portions of the SW header. Acceptable alignments must comport to the SW system analyses. Additionally, the 1 hour Completion Time provides sufficient time to accommodate transitory operations (e.g. additional equipment inoperabilities, operations required to realign systems and equipment, etc;) without requiring initiation of a unit shutdown. The 1 hour Completion Time is commensurate with the importance of maintaining the SW System in an OPERABLE configuration. F Additional change G F Additional change

Additionally, Required Action C.2 directs that the SW ring header continuous flowpath must be restored within 7 days. Since acceptable alignments during this period may include less than five OPERABLE SW pumps, Required Action B.1 may limit operation in Condition C to less than 7 days. F RAI 3.7.8-2 G

With one or more ring header isolation valves incapable of being closed, the SW System will continue to be capable of providing the required cooling water flow to required equipment. However, the ability to isolate a break in the system while continuing to provide cooling water to required equipment may be impaired.

With one or more ring header isolation valves closed, the SW System may remain capable of providing the required cooling water flow to the minimum required number of components depending on system alignment and the OPERABILITY of other SW System components.

Multiple closed ring header isolation valves could result in loss of cooling water to required equipment (e.g. closure of valves SW-2869 and SW-2870 will render two of the four containment fan coolers inoperable on each Unit). If multiple closed ring header

BASES

SURVEILLANCE REQUIREMENTS (continued)	Operating experience has shown that these components usually pass the Surveillance when performed at the 18 month Frequency. Therefore, the Frequency is acceptable from a reliability standpoint.

REFERENCES

1. FSAR. Section 9.6.
2. FSAR. Section 14.3.4.
3. FSAR. Section 9.2.
4. Technical Requirements Manual, TLCO 3.7.7, SW System G

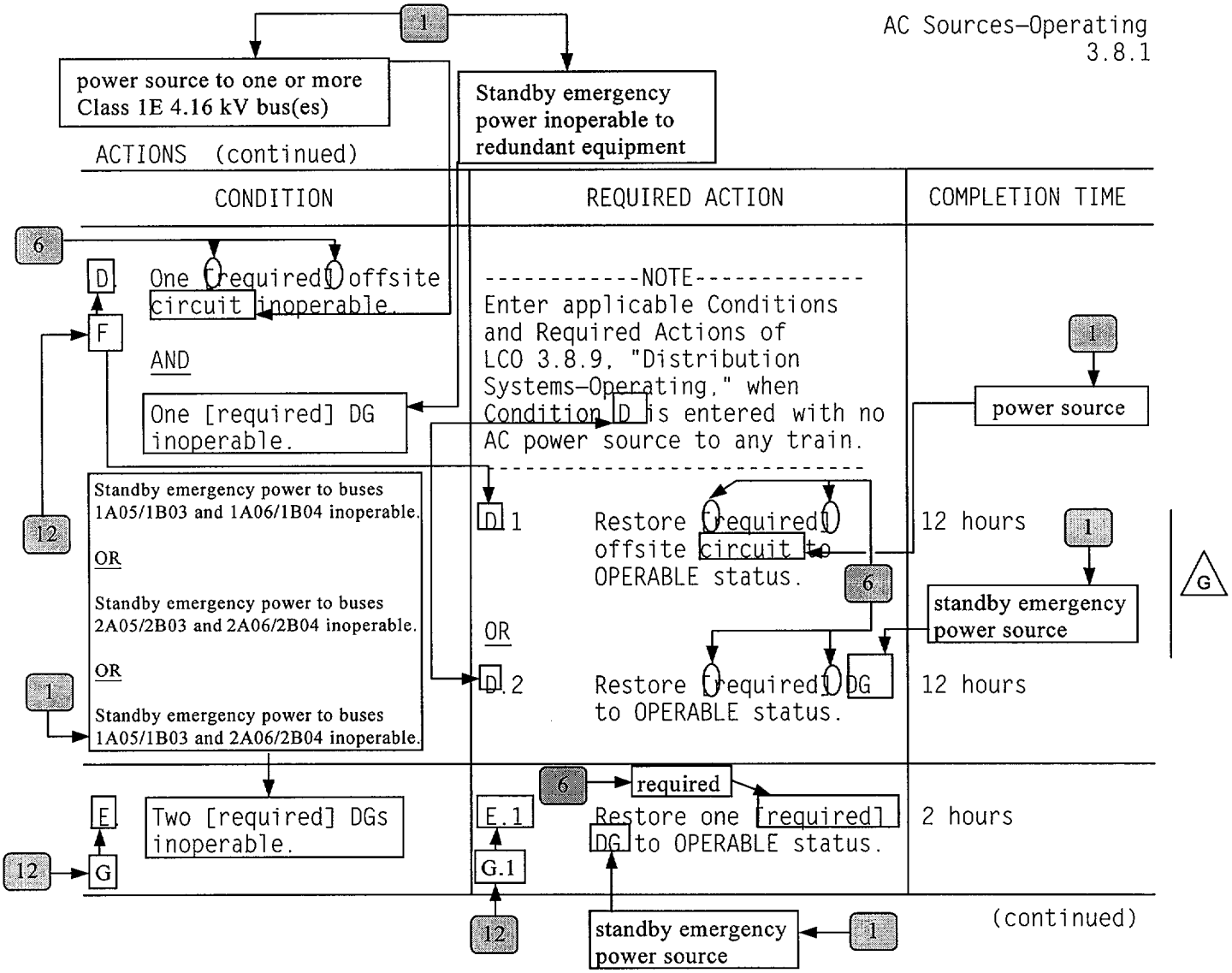
1
power source to one or more Class 1E 4.16 kV bus(es)
Standby emergency power inoperable to redundant equipment
ACTIONS (continued)
CONDITION
REQUIRED ACTION
COMPLETION TIME
6
D. One [required] offsite circuit inoperable.
F
AND
One [required] DG inoperable.
----------NOTE----------
Enter applicable Conditions and Required Actions of LCO 3.8.9, "Distribution Systems–Operating," when Condition D is entered with no AC power source to any train.

1
power source
Standby emergency power to buses 1A05/1B03 and 1A06/1B04 inoperable.
OR
Standby emergency power to buses 2A05/2B03 and 2A06/2B04 inoperable.
OR
Standby emergency power to buses 1A05/1B03 and 2A06/2B04 inoperable.
12
D.1
Restore [required] offsite circuit to OPERABLE status.
12 hours
1
standby emergency power source
G
OR
D.2
Restore [required] DG to OPERABLE status.
12 hours
E. Two [required] DGs inoperable.
G
E.1
G.1
Restore one [required] DG to OPERABLE status.
required
2 hours
standby emergency power source
(continued)

ACTIONS (continued)

CONDITION	REQUIRED ACTION		COMPLETION TIME
F. One or more required offsite power source to one or more Class 1E 4.16 kV safeguards bus(es) inoperable. AND Standby emergency power inoperable to redundant equipment.	----------NOTE---------- Enter applicable Conditions and Required Actions of LCO 3.8.9, "Distribution Systems–Operating," when Condition F is entered with no AC power to any train. ----------		
	F.1	Restore required offsite circuit to OPERABLE status.	12 hours
	OR		
	F.2	Restore required standby emergency power source to OPERABLE status.	12 hours
G. Standby emergency power to buses 1A05/1B03 and 1A06/1B04 inoperable. OR Standby emergency power to buses 2A05/2B03 and 2A06/2B04 inoperable. OR Standby emergency power to buses 1A05/1B03 and 2A06/2B04 inoperable.	G.1	Restore one required standby emergency power source to OPERABLE status.	2 hours G
H. Required Action and associated Completion Time not met.	H.1	Be in MODE 3.	6 hours
	AND		
	H.2	Be in MODE 5.	36 hours

ENCLOSURE

Table A – Administrative Changes
ITS Section 1.0 – Use and Application

DOC No.	Description of Change	ITS Requirement	CTS Requirement
1.0 A1	Editorial changes, reformatting, and revised numbering.	1.1 THERMAL POWER definition	15.1.K, 15.1.O, 15.1.P
1.0 A2	Not used.	N/A	N/A
1.0 A3	The CTS definition for CHANNEL CALIBRATION is revised under ITS to more clearly state that RTD and thermocouple calibrations are to be performed by using an in-place qualitative assessment of sensor behavior, specifically state that a calibration may be performed by any series of sequential, overlapping steps, and remove the requirement to include equipment action in the definition of channel. This change is administrative because it does not in itself change any operational restrictions.	1.1 CHANNEL CALIBRATION definition	15.1.F.3
1.0 A4	ITS replaces the various plant conditions designated for applicability of individual specifications in CTS with a single set of exclusive plant conditions under the ITS definition of MODE, as established in ITS Table 1.1-1. This change is administrative because it does not in itself change any operational restrictions.	1.1 MODE definition	NEW
1.0 A5	The CTS definition of cold shutdown is modified under ITS to include "all reactor head bolts fully tensioned," as the differentiation between the cold shutdown and refueling operational conditions. This change addresses plant conditions not previously satisfying a defined mode. This change is administrative because it does not in itself change any operational restrictions.	Table 1.1-1, Note (b)	15.1.G.2
1.0 A6	The CTS Refueling Shutdown surveillance interval, which by exception was only applicable during plant shutdowns for movement of fuel into or out of the reactor vessel, is modified under ITS with a reference to either a fixed interval or a specific plant condition/evolution. This change is administrative because it does not in itself change any operational restrictions.	Table 1.1-1, Note (c)	15.1.G.3
1.0 A7	The CTS definition of Shutdown Margin is revised under ITS to more clearly state that the reactivity worth of the highest worth rod cluster control assembly (RCCA) must be accounted for in the SDM calculation, except when all RCCAs are fully inserted, and more clearly state the appropriate moderator and fuel temperature assumptions to be used for SDM calculations. This change is administrative because it does not in itself change any operational restrictions.	1.1 SHUTDOWN MARGIN (SDM) definition	15.1.g.4), 15.3.10.B.1.a(2)(b)
1.0 A8	Not used.	N/A	N/A
1.0 A9	The CTS definition of Rated Power is revised to be consistent with the ITS definition of RATED THERMAL POWER. This change is administrative because it does not in itself change any operational restrictions.	1.1 RATED THERMAL POWER definition	15.1.J

Table A – Administrative Changes
ITS Section 1.0 – Use and Application

DOC No.	Description of Change	ITS Requirement	CTS Requirement
1.0 A10	The CTS term Reactor Critical is not utilized in the ITS and has not been retained in the ITS. This change is administrative because it does not in itself change any operational restrictions.	DELETED	15.1.J
1.0 A11	Not used.	N/A	N/A
1.0 A12	The CTS term Fire Suppression Water System is not utilized in the ITS and not been retained.	DELETED	15.1.N
1.0 A13	ITS adds the following definitions to enhance the understanding and usability of the Technical Specifications: CORE OPERATING LIMITS REPORT (COLR), PHYSICS TESTS, ACTIONS, MASTER RELAY TEST, ACTUATION LOGIC TEST, SLAVE RELAY TEST, STAGGERED TEST BASIS, LEAKAGE, PRESSURE AND TEMPERATURE LIMITS REPORT (PTLR), TRIP ACTUATION DEVICE OPERATIONAL TEST (TADOT), and AXIAL FLUX DIFFERENCE (AFD). Adding these definitions is administrative because it does not in itself change any operational restrictions.	1.1 COLR, PHYSICS TESTS, ACTIONS, MASTER RELAY TEST, ACTUATION LOGIC TEST, SLAVE RELAY TEST, STAGGERED TEST BASIS, LEAKAGE, PTLR, TADOT, and AFD definitions	NEW
1.0 A14	ITS adds ITS Section 1.2, Logical Connectors, to the Technical Specifications to aid in the understanding and use of the new format and presentation style, and to establish positions not previously formalized.	1.2	NEW
1.0 A15	ITS adds ITS Section 1.4, Frequency, to the Technical Specifications to aid in the understanding and use of the new format and presentation style, and to establish positions not previously formalized.	1.4	NEW
1.0 A16	ITS changes the location of requirements for maximum allowable primary containment leakage rate, L_a, through creation of a defined term in the ITS.	1.1 L_a definition	15.6.12.C
1.0 A17	The CTS definition of Quadrant Power Tilt Ratio is revised under ITS to an equivalent method representing the Westinghouse peaking factor monitoring methodology that is based on normalized power levels in the top and bottom half of the core. This change is administrative because it does not in itself change any operational restrictions.	1.1 QUADRANT POWER TILT RATIO definition	15.1.B

Table A – Administrative Changes
ITS Section 1.0 – Use and Application

DOC No.	Description of Change	ITS Requirement	CTS Requirement
1.0 A18	The CTS requirement for Channel Functional Test is modified under the ITS definition of CHANNEL OPERATIONAL TEST (COT) to explicitly allow use of actual as well as simulated signals, and to specifically state that the COT may be performed by any series of sequential, overlapping steps. This change is administrative because it only clarifies current plant practices consistent with the CTS.	1.1 CHANNEL OPERATIONAL TEST definition	15.1.F.2

TABLE L – Less Restrictive Changes
ITS Section 1.0 – Use and Application

DOC No.	Description of Change	ITS Requirement	CTS Requirement	Change Type
1.0 L1	The CTS definition of Channel Calibration is revised under ITS to clarify that a qualitative assessment of channel behavior by comparison with other channels is only required under the ITS in instances where performance of this assessment is possible.	1.1 CHANNEL CHECK definition	15.1.F.1	1
1.0 L2	The maximum allowable average reactor coolant temperature consistent with the refueling shutdown condition is increased from 140 degrees F under CTS, to 200 degrees F, consistent with the ITS definition of MODE 6 for refueling.	1.1 MODE 6 definition	15.1.G.3	1
1.0 L3	ITS adds provisions allowing a 25% frequency extension to subsequent performance of Actions required to be performed more than once, and a 24-hour extension for completing Required Actions which are the result of subsequent entries into the same Conditions and Required Actions due to overlapping inoperabilities.	1.4	N/A	6
1.0 L4	The CTS definition of Operability, which required both the normal and emergency power supply, is modified under ITS to specify that either the normal or emergency power supply must operable based on the establishment of adequate controls for power availability provided in the individual ITS specifications.	1.1 OPERABILITY definition	15.1.C	1
1.0 L5	The CTS definition of Power Operation is revised from "Condition when the reactor is critical and the average neutron flux of the power range instrumentation indicates greater than 2 percent of rated power," to MODE 1 ($k_{eff} \geq 0.99$ and > 5% RTP, excluding decay heat.) Therefore, the conditions during which the requirements of LCOs applicable in MODE 1 are reduced.	Table 1.1-1 MODE 1 definition, Table 1.1-1 NOTE (a)	15.1.h, Power Operation definition	2
1.0 L6	The CTS definition of Protective Instrumentation Logic, which is not used in the context of a defined term in the ITS, has not been retained in the ITS.	N/A	15.1.E.1	1
1.0 L7	The CTS definition of Logic Channel, which is not used in the context of a defined term in the ITS, has not been retained in the ITS.	N/A	15.1.E.2	1

CHANGE TYPES

1. Relaxation of LCO Requirement
2. Relaxation of Applicability
3. Relaxation of Surveillance Requirement
4. Relaxation of Required Action
5. Relaxation of CTS Reporting Requirements
6. Relaxation of Completion Time
7. Deletion of Requirements Redundant to Regulations

TABLE L – Less Restrictive Changes
ITS Section 1.0 – Use and Application

DOC No.	Description of Change	ITS Requirement	CTS Requirement	Change Type
1.0 LB1	The CTS definition of Reportable Event, which merely provides a reference to the regulatory requirements of 10 CFR 50.73, and is not otherwise used in the context of a defined term in the ITS, has not been retained in the ITS.	N/A	15.1.A	7

CHANGE TYPES

1. Relaxation of LCO Requirement
2. Relaxation of Applicability
3. Relaxation of Surveillance Requirement
4. Relaxation of Required Action
5. Relaxation of CTS Reporting Requirements
6. Relaxation of Completion Time
7. Deletion of Requirements Redundant to Regulations

Table M – More Restrictive Changes
ITS Section 1.0 – Use and Application

DOC No.	Description of Changes	ITS Requirement	CTS Requirement
1.0 M1	ITS revises the CTS definition of Hot Shutdown to decrease the lower limit for this condition from 540 degrees F to 350 degrees F, resulting in earlier entry into and application of the requirements of the equivalent Hot Standby condition, ITS MODE 3.	Table 1.1-1 MODE 3 definition	15.1.g.1) Hot Shutdown definition
1.0 M2	Adds the ITS definition for MODE 4, Hot Shutdown, which was not previously defined by an equivalent plant operational condition in the CTS, in order to provide a consistent exclusive set of unambiguous Conditions/Modes.	Table 1.1-1 MODE 4 definition	N/A
1.0 M3	The CTS definition of Low Power Operation is revised from "Condition when the reactor is critical and the average neutron flux of the power range instrumentation indicates less than or equal to 2% of rated power," to MODE 2 ($k_{eff} \geq 0.99$ and $\leq 5\%$ RTP, excluding decay heat). Therefore, the conditions during which the requirements of LCOs applicable in MODE 2 are increased.	Table 1.1-1 MODE 2 definition	15.1.l, 15.1.m

Table R – Relocated Specifications and Removed Details
ITS Section 1.0 – Use and Application

DOC No.	CTS Requirement	Description of Relocated Requirements	Location	Change Control Process	Change Type
1.0 LA1	N/A	Not used.	N/A	N/A	N/A
1.0 LA2	N/A	Not used.	N/A	N/A	N/A
1.0 LA3	15.1.i Refueling Operation definition	Moves controls for movement of control rods and unirradiated fuel within the containment when they are outside the reactor vessel.	TRM	10 CFR 50.59	4

CHANGE TYPES

1. Details of System Design and System Description including Design Limits
2. Description of System or Plant Operation
3. Procedural Details for Meeting TS Requirement and Relocated Reporting Requirements
4. Relocated Redundant Requirements

Table A – Administrative Changes
ITS Section 2.0 – Safety Limits

DOC No.	Description of Changes	ITS Requirement	CTS Requirement
2.0 A1	Editorial changes, reformatting, and revised numbering of CTS requirements for safety limits (SLs).	SL 2.1.1, SL 2.1.2	15.2.1.1, 15.2.2, 15.2.2
2.0 A2	Not used.	N/A	N/A
2.0 A3	The Bases have been completely replaced by revised Bases that reflect the format and applicable content of NUREG-1431.	Bases	Bases
2.0 A4	The CTS requirement that the RCS Pressure Safety Limit applies whenever there is fuel in the reactor vessel is modified under ITS with a reference to the inclusive set of ITS Modes where fuel assemblies may be installed in the reactor vessel (e.g., Modes 1, 2, 3, 4, 5, and 6). This change is administrative because it only clarifies current plant practices consistent with the CTS.	SL 2.1.2	15.2.2
2.0 A5	Removes the introductory Objective statement at the beginning of each CTS Safety Limit section. These statements were strictly informational and did not establish any regulatory requirements.	SL 2.1.1 Bases, SL 2.1.2 Bases	15.2.1 Objective, 15.2.2 Objective

Table L – Less Restrictive Changes
ITS Section 2.0 – Safety Limits

DOC No.	Description of Changes	ITS Requirement	CTS Requirement	Change Type
2.0 L1	ITS revises Applicability of the CTS Reactor Core Safety Limits (SLs) from "during Operation," to ITS Modes 1 and 2.	SL 2.1.1	15.2.1 Applicability	2
2.0 L2	The CTS requirement to provide a Safety Limit violation report to the NRC within 10 days of the occurrence has been relaxed to 30 days, which is the time period allowed by 10 CFR 50.73.	N/A	15.6.7.D	5
2.0 LB1	The CTS requirement for NRC approval prior to restart, and details related to the content of the Safety Limits violation report and other reporting requirements that are duplicative of the regulatory requirements, have not been retained in the ITS. ~~Also, the CTS requirement to provide the Safety Limits violation report within 10 days has been relaxed to 30 days, which is the time period allowed by 10 CFR 50.73.~~	N/A	15.6.7.A, 15.6.7.C, 15.6.7.D	7

CHANGE TYPES

1. Relaxation of LCO Requirement
2. Relaxation of Applicability
3. Relaxation of Surveillance Requirement
4. Relaxation of Required Action
5. Relaxation of CTS Reporting Requirements
6. Relaxation of Completion Time
7. Deletion of Requirements Redundant to Regulations

Table M – More Restrictive Changes
ITS Section 2.0 – Safety Limits

DOC No.	Description of Changes	ITS Requirement	CTS Requirement
2.0 M1	The CTS criteria for when a Core Safety Limit is exceeded is modified under ITS from being defined as any combination of reactor coolant system average temperature and power level that is above the appropriate pressure line, to being based on the highest loop average temperature and power level—eliminating the ability to average the RCS loop temperatures.	SL 2.1.1	15.2.1.1
2.0 M2	ITS adds an explicit time requirement for shutdown of an affected unit in the event of a Safety Limit violation, which did not previously exist in the CTS.	SL 2.2.1, SL 2.2.2.1, 2.2.2.2	15.6.7.A

Table R – Relocated Specifications and Removed Details
ITS Section 2.0 – Safety Limits

DOC No.	CTS Requirement	Description of Relocated Requirements	Location	Change Control Process	Change Type
2.0 LA1	15.6.7.B, 15.6.7.C, 15.6.7.D	Relocates CTS requirements for review of Safety Limit violation reports by the Chief Nuclear Officer and Off-Site Review Committee.	QA Program	10 CFR 50, Appendix B, 10 CFR 50.54(a)	3
2.0 LA2	15.2.1.1, Figure 15.2.1-1, Figure 15.2.1-2	Relocates the CTS Reactor Core Safety Limit curves.	COLR	COLR Program described in ITS 5.6.4.	4

CHANGE TYPES

1. Details of System Design and System Description including Design Limits
2. Description of System or Plant Operation
3. Procedural Details for Meeting TS Requirement and Relocated Reporting Requirements
4. Relocated Redundant Requirements

Table A – Administrative Changes
ITS Section 3.0 – LCO and SR Applicability

DOC No.	Description of Changes	ITS SECTION	CTS SECTION
3.0 A1	Editorial changes, reformatting, and revised numbering of CTS general requirements for limiting conditions for operation (LCOs) and surveillance requirements (SRs).	Section 3.0, LCO 3.0.2, LCO 3.0.3, SR 3.0.1, SR 3.0.3, SR 3.0.4	15.3.0, 15.3.0.C, 15.4.0.1, 15.4.0.2, 15.4.0.3, 15.4.0.4
3.0 A2	ITS replaces the CTS default actions (action requirements, such as a unit shutdown, in the event the initial actions specified with an LCO are not met within the time allowed) for LCOs which have no default actions, and the provision making completion of specified Actions unnecessary when the requirements of an LCO are met or are no longer applicable, with default actions for each ITS LCO. This change is administrative because it only clarifies current plant practices consistent with the CTS.	Default action requirements in each specification in ITS Section 3.0, as applicable; may include LCO 3.0.3 entry.	15.3.0.A, 15.3.0.C ~~and C~~
3.0 A3	The ITS revises the wording of CTS 15.3.0.B, which provides default Actions for equipment failures and limitations beyond those specified in the LCO, to describe the conditions under which it applies with respect to Modes, and not RCS temperature. Additionally, the application of these Actions has been broadened to include situations involving failure to meet Completion Times, where an Action is not provided, or when directed by an Action. This change is administrative because it does not in itself change any operational restrictions.	LCO 3.0.3	15.3.0.B
3.0 A4	The CTS provision allowing equipment that has been removed from service or declared inoperable to comply with an Action to be returned to service in order to perform testing to demonstrate equipment operability has been reflected in the ITS as an exception to ITS 3.0.2, which requires entry into the applicable Conditions and Required Actions of an associated LCO when the LCO is not met.	LCO 3.0.2, LCO 3.0.5	15.3.0.C, 15.3.0.F
3.0 A5	ITS 3.0.6 has been added to delineate Technical Specification usage rules for support system inoperabilities, and is an extension of the CTS definition of Operability that is necessary to prevent unnecessary application of supported system action requirements. This change is administrative because it only clarifies current plant practices consistent with the CTS.	LCO 3.0.2, LCO 3.0.6	15.3.0.C~~,~~
3.0 A6	The Bases have been completely replaced by revised Bases that reflect the format and applicable content of NUREG-1431.	Section 3.0 Bases	Bases
3.0 A7	ITS 3.0.1 has been added to explicitly state Technical Specification usage rules regarding the need to comply with LCOs during Applicable Modes and other specified conditions. This change is administrative because it only clarifies current plant practices consistent with the CTS, as implied by CTS 15.3.0.C.	LCO 3.0.1	15.3.0.C

Table A – Administrative Changes
ITS Section 3.0 – LCO and SR Applicability

DOC No.	Description of Changes	ITS SECTION	CTS SECTION
3.0 A8	ITS 3.0.6 has been added to delineate Technical Specification usage rules regarding Special Test Exceptions that will no longer appear in the individual Special Test Exceptions under ITS. This change is administrative because it only clarifies current plant practices consistent with the CTS.	LCO 3.0.2, LCO 3.0.7	15.3.6.A.1, 15.3.10.F.1, 15.3.10.G.1
3.0 A9	ITS SR 3.0.2 has been added to clarify Technical Specification usage rules and phrasing related to new types of surveillance frequencies (i.e., "once," "once per," "from the time a specified condition is met"). This change is administrative because it only clarifies current plant practices consistent with the CTS.	SR 3.0.2	15.4.0.2
3.0 A10	ITS revises the presentation of the default action provisions of CTS 15.3.0.B for equipment failures and limitations beyond those specified in the LCOs as ITS 3.0.3. Time frames for reaching Hot Shutdown (Mode 3) and Cold Shutdown (Mode 5) remain unchanged.	LCO 3.0.3	15.3.0.B

Table L – Less Restrictive Changes
ITS Section 3.0 – LCO and SR Applicability

DOC No.	Description of Change	ITS Requirement	CTS Requirement	Change Type
3.0 NONE	NONE	NONE	NONE	NONE

CHANGE TYPES

1. Relaxation of LCO Requirement
2. Relaxation of Applicability
3. Relaxation of Surveillance Requirement
4. Relaxation of Required Action
5. Relaxation of CTS Reporting Requirements
6. Relaxation of Completion Time
7. Deletion of Requirements Redundant to Regulations

Table M - More Restrictive Changes
ITS Section 3.0 – LCO and SR Applicability

DOC No.	Description of Change	ITS Requirement	CTS Requirement
3.0 M1	ITS adds a requirement for entry into Mode 4 within 13 hours for equipment failures or limitations beyond those specified in the LCOs that did not exist in the CTS because the Mode 4 operational condition was not defined in CTS.	LCO 3.0.3	15.3.0.B
3.0 M2	ITS LCO 3.0.4 has been added to delineate Technical Specification usage rules associated with restricting the entry into Modes and other specified Conditions while an LCO Action is in effect, in lieu of the CTS format of specifying such restrictions in individual specifications.	LCO 3.0.4	N/A
3.0 M3	ITS replaces the CTS 15.4.0.4 provision allowing entry into a Mode or specified Condition without having performed required surveillance testing if entry is required to perform the specified surveillance with explicit allowances and bounding limits in the individual ITS specifications where an allowance may be applied.	SR 3.0.4	15.4.0.4
3.0 M4	The ITS deletes the CTS 15.3.0.E provision stating that the minimum operable channels requirements of Table 15.3.5-2 (Reactor Protection Instrumentation) is not considered violated if the cause of the inoperability was the result of momentary loss of normal or emergency power.	N/A	15.3.0.E

Table R – Relocated Specifications and Removed Details
ITS Section 3.0 – LCO and SR Applicability

Doc No.	CTS Requirement	Description of Relocated Requirements	Location	Change Control Process	Change Type
3.0 NONE	NONE	NONE	NONE	NONE	NONE

CHANGE TYPES

1. Details of System Design and System Description including Design Limits
2. Description of System or Plant Operation
3. Procedural Details for Meeting TS Requirement and Relocated Reporting Requirements
4. Relocated Redundant Requirements

Table A – Administrative Changes
ITS Section 3.1 – Reactivity Control Systems

DOC No.	Description of Change	ITS Requirement	CTS Requirement
3.1.1 A1	Editorial changes, reformatting, and revised numbering.	3.1.1	15.3.10
3.1.1 A2	Removes the introductory Applicability statement at the beginning of each CTS section. These statements were strictly informational and did not establish any regulatory requirements.	3.1.1 title	15.3.10 Applicability
3.1.1 A3	Removes the introductory Objective statement at the beginning of each CTS section. These statements were strictly informational and did not establish any regulatory requirements.	3.1.1 Bases	15.3.10 Objective
3.1.1 A4	The CTS presentation of SDM requirements has been equivalently restructured to describe SDM requirements with respect to a differently described set of plant conditions, consistent with the format and presentation of the ITS. This change is administrative since it does not change any operational restrictions.	3.1.1	15.3.10.A.1, 15.3.10.A.2
3.1.1 A5	The CTS Required Action to initiate boration within 15 minutes when SDM limits are not met has been reflected in the ITS. This change is administrative since it does not change any operational restrictions.	3.1.1 ACTION A, 3.1.1 Required Action A.1, 3.9.1 Required Action A.3	15.3.10.A.1, 15.3.10.A.2
3.1.1 A6	The Bases have been completely replaced by revised Bases that reflect the format and applicable content of NUREG-1431.	3.1.1 Bases	Bases
3.1.2 NONE	NONE	NONE	NONE
3.1.3 A1	Editorial changes, reformatting, and revised numbering.	3.1.2, 3.1.2 Required Action A.1	15.4.9
3.1.3 A2	Removes the introductory Applicability statement at the beginning of each CTS section. These statements were strictly informational and did not establish any regulatory requirements.	3.1.2 title	15.4.9 Applicability
3.1.3 A3	Removes the introductory Objective statement at the beginning of each CTS section. These statements were strictly informational and did not establish any regulatory requirements.	3.1.3 Bases	15.4.9 Objective
3.1.3 A4	The Bases have been completely replaced by revised Bases that reflect the format and applicable content of NUREG-1431.	3.1.3 Bases	Bases
3.1.4 A1	Editorial changes, reformatting, and revised numbering.	3.1.3	15.3.1.F.1

Table A – Administrative Changes
ITS Section 3.1 – Reactivity Control Systems

DOC No.	Description of Change	ITS Requirement	CTS Requirement
3.1.4 A2	The upper limits for MTC and the Applicability described in the CTS have been reflected in the ITS.	3.1.3	15.3.1.F.1, 15.3.1.F.2
3.1.4 A3	The Bases have been completely replaced by revised Bases that reflect the format and applicable content of NUREG-1431.	3.1.3 Bases	Bases
3.1.5 A1	Editorial changes, reformatting, and revised numbering.	3.1.4, 3.1.4 Required Action A.1.1, 3.1.4 Required Action A.1.2, 3.1.4 Required Action A.2, 3.1.4 Required Action B.1, 3.1.4 Required Action B.2.1.1, 3.1.4 Required Action B.2.3, 3.1.4 Required Action C.1, 3.1.4 Required Action D.1.1, 3.1.4 Required Action D.1.2, SR 3.1.4.1, SR 3.1.4.2, SR 3.1.4.3	15.3.10, 15.3.10.B.1, 15.3.10.B.1.a.(3), 15.3.10.B.1.a.(3)(a), 15.3.10.B.1.a.(3)(b), 15.3.10.B.1.b.(1), 15.3.10.B.1.b.(1)(a), 15.3.10.B.1.b.(1)(c), 15.3.10.B.1.b.(1)(f), 15.3.10.B.1.b.(2), 15.3.10.B.1.b.(2)(a), 15.3.10.H, 15.3.10.H.1, Table 15.4.1-2 Item 9.a), Table 15.4.1-2 Item 10
3.1.5 A2	Removes the introductory Applicability statement at the beginning of each CTS section. These statements were strictly informational and did not establish any regulatory requirements.	3.1.4 title	15.3.10 Applicability
3.1.5 A3	Removes the introductory Objective statement at the beginning of each CTS section. These statements were strictly informational and did not establish any regulatory requirements.	3.1.4 Bases	15.3.10 Objective
3.1.5 A4	The CTS requirement that all shutdown and control rods are operable and within alignment limits that are based upon demanded positions during power and low power operation has been reflected in the ITS LCO and SR.	3.1.4, SR 3.1.4.1	15.3.10.B.1
3.1.5 A5	CTS Actions for untrippable and misaligned control rods have been changed under ITS to reference the SDM limits provided in the COLR. This change is administrative since it does not change any operational restrictions.	5.65.4, COLR	15.3.10.B.1.a.(1)(a), 15.3.10.B.1.a.(3)(a), 15.3.10.B.1.b.(1)(a), 15.3.10.B.1.b.(1)(c), 15.3.10.B.1.b.(2)(a)

Table A – Administrative Changes
ITS Section 3.1 – Reactivity Control Systems

DOC No.	Description of Change	ITS Requirement	CTS Requirement
3.1.5 A6	CTS requirements to place the unit in Hot Shutdown if Actions are not met have been modified to reflect the equivalently defined ITS plant condition, which is Mode 3. This change is administrative since it does not change any operational restrictions.	3.1.4 Required Action A.2, 3.1.4 Required Action D.2	15.3.10.B.1.a.(1)(c), 15.3.10.B.1.a.(3)(b), 15.3.10.B.1.b.(2)(b)
3.1.5 A7	CTS requirements for control rod alignment limits, and the exception to the requirement that these limits be fulfilled using the demand and individual rod position indicators when misalignment is caused by a malfunctioning position indicator have been reflected in the ITS. This change is administrative since it does not change any operational restrictions.	3.1.4, 3.1.4 ACTION B	15.3.10.B.1.b.(1), 15.3.10.B.1.b.(2)
3.1.5 A8	The CTS requirement that $F_Q(Z)$ and $F^N_{\Delta H}$ be verified within limits within 72 hours of determining a control rod is misaligned has been reflected in the ITS as Surveillance Requirements.	3.1.4 Required Action B.2.4, 3.1.4 Required Action B.2.5	15.3.10.B.1.b(1)(d), 15.3.10.B.1.b(1)(e)
3.1.5 A9	The format and presentation of CTS Actions for control rods that do not meet their rod drop time have been modified consistent with the ITS to provide functionally equivalent Actions. This change is administrative since it does not change any operational restrictions.	3.1.4 ACTION A, LCO 3.0.4	15.3.10.H.1, 15.3.10.H.1.a, 15.3.10.H.1.b
3.1.5 A10	The CTS requirement that rod drop timing must be performed for all full length control rods has not been retained in the ITS since the PBNP no longer uses partial length control rods. This change is administrative because it does not alter any operational restrictions.	SR 3.1.4.3	Table 15.4.1-2 Item 9.a)
3.1.5 A11	The CTS requirement to perform control rod drop timing at rated reactor coolant flow is reflected under ITS as an equivalent requirement that all reactor coolant pumps are running and verification of 100% of the required forced circulation through the reactor core. This change is administrative because it does not alter any operational restrictions.	SR 3.1.4.3	Table 15.4.1-2 Item 9.a) Note (3)
3.1.5 A12	The CTS provision exempting the requirements for control rod partial movement test when the reactor is subcritical is not retained because it is functionally equivalent to ITS SR 3.0.1, which establishes the requirement that surveillances must be met when the LCO and SR are applicable. This change is administrative because it does not alter any operational restrictions.	SR 3.0.1	Table 15.4.1-2 Item 10 Note (18)
3.1.5 A13	The CTS provision exempting the requirements for shiftly control rod alignment channel checks has not been retained since it is functionally equivalent to ITS SR 3.0.1. This change is administrative because it does not alter any operational restrictions.	3.1.4	Table 15.4.1-1 Item 19, Table 15.4.1-1 Item 19 Note (22), Table 15.4.1-1 Item 19.a), Table 15.4.1-1 Item 19.a) Note (22),

Table A – Administrative Changes
ITS Section 3.1 – Reactivity Control Systems

DOC No.	Description of Change	ITS Requirement	CTS Requirement
3.1.5 A14	The CTS requirement to perform a shiftly control rod alignment channel check is retained as a verification that control rod alignment limits are met. This change is administrative because it does not alter any operational restrictions.	SR 3.1.4.1	Table 15.4.1-1 Item 19, Table 15.4.1-1 Item 19.a)
3.1.5 A15	The Bases have been completely replaced by revised Bases that reflect the format and applicable content of NUREG-1431.	3.1.4 Bases	Bases
3.1.5 A16	The CTS requirement to partially move control rods to confirm they are not impaired on a quarterly basis is reflected as a 92 day frequency under ITS. This change is administrative because it does not alter any operational restrictions.	SR 3.1.4.2	Table 15.4.1-2 Item 10
3.1.5 A17	The changes to the control rod position indication requirements in the CTS were necessitated by an Amendment to the CTS Individual Rod Position Indication Specification. The Note allows a one hour soak prior to verifying rod operability and alignment limits.	3.1.4	15.3.10.B
3.1.6 A1	Editorial changes, reformatting, and revised numbering.	3.1.5, 3.1.5 ACTION A, 3.1.5 Required Action A.2, 3.1.5 ACTION B, 3.1.5 Required Action B.1, SR 3.1.5.1	15.3.10, 15.3.10.D.1, 15.3.10.D.1.a, 15.3.10.D.1.b, 15.3.10.D.1.c, Table 15.4.1-1 Item 19, Table 15.4.1-1 Item 19.a)
3.1.6 A2	Not used.	N/A	N/A
3.1.6 A3	The Bases have been completely replaced by revised Bases that reflect the format and applicable content of NUREG-1431.	3.1.5 Bases	Bases
3.1.6 A4	The CTS requirement to perform a shiftly control rod alignment channel checks has not been retained since it is functionally equivalent to ITS SR 3.0.1. This change is administrative because it does not alter any operational restrictions.	SR 3.1.5.1	Table 15.4.1-1 Item 19 Note (22), Table 15.4.1-1 Item 19.a) Note (22)
3.1.6 A5	The CTS requirement to perform a shiftly control rod alignment channel check has been retained as a verification that control rod insertion limits. This change is administrative because it does not alter any operational restrictions.	SR 3.1.5.1	Table 15.4.1-1 Item 19, Table 15.4.1-1 Item 19.a)

Table A – Administrative Changes
ITS Section 3.1 – Reactivity Control Systems

DOC No.	Description of Change	ITS Requirement	CTS Requirement
3.1.6 A6	Removes the introductory Applicability statement at the beginning of each CTS section. These statements were strictly informational and did not establish any regulatory requirements.	3.1.5 title	15.3.10 Applicability
3.1.6 A7	Removes the introductory Objective statement at the beginning of each CTS section. These statements were strictly informational and did not establish any regulatory requirements.	3.1.5 Bases	15.3.10 Objective
3.1.6 A8	The CTS presentation of SDM requirements has been equivalently restructured to describe SDM requirements with respect to a differently described set of plant conditions, insertion limits. This change is administrative because it does not alter any operational restrictions.	LCO 3.1.5	15.3.10.A.1
3.1.6 A9	The Note allows a one hour soak prior to verifying bank insertion limits. The changes to the control rod position indication requirements in the CTS were necessitated by an Amendment to the Individual Rod Position Indication Specification.	LCO 3.1.5 Note	15.3.10.D Note
3.1.7 A1	Editorial changes, reformatting, and revised numbering.	3.1.6, 3.1.6 ACTION A, 3.1.6 Required Action A.2, 3.1.6 ACTION C, 3.1.6 Bases	15.3.10.D.2, 15.3.10.D.2.a, 15.3.10.D.2.b, 15.3.10.D.2.c, Bases
3.1.7 A2	The CTS applicability for control bank insertion limits has been extended under ITS from when the reactor is critical to Modes 1 and 2. Also, the requirement to perform a shiftly channel check of the rod position indicators has similarly been reflected as Modes 1 and 2. This change is administrative because it only clarifies current plant practices consistent with the CTS.	3.1.6, SR 3.1.6.2	15.3.10.D.2, Table 15.4.1-1 Item 19, Table 15.4.1-1 Item 19.a), Table 15.4.1-1 Item 19 ALL
3.1.7 A3	The Bases have been completely replaced by revised Bases that reflect the format and applicable content of NUREG-1431.	3.1.6 Bases	Bases
3.1.7 A4	The CTS requirement for shiftly control rod alignment channel checks has not been retained since it is functionally equivalent to ITS SR 3.0.1. This change is administrative because it does not result in any operational restrictions.	SR 3.1.6.2	Table 15.4.1-1 Item 19 Note (22), Table 15.4.1-1 Item 19.a) Note (22)
3.1.7 A5	The CTS requirement to perform a shiftly control rod alignment channel check: has been retained in ITS as a verification that control rod insertion, alignment, and overlap limits are met. This change is administrative because it does not alter any operational restrictions.	SR 3.1.6.2, SR 3.1.6.3	Table 15.4.1-1 Item 19, Table 15.4.1-1 Item 19.a)

Table A – Administrative Changes
ITS Section 3.1 – Reactivity Control Systems

DOC No.	Description of Change	ITS Requirement	CTS Requirement
3.1.7 A6	Removes the introductory Applicability statement at the beginning of each CTS section. These statements were strictly informational and did not establish any regulatory requirements.	3.1.6	15.3.10 Applicability
3.1.7 A7	Removes the introductory Objective statement at the beginning of each CTS section. These statements were strictly informational and did not establish any regulatory requirements.	Bases	15.3.10 Objective
3.1.7 A8	The CTS presentation of SDM requirements has been equivalently restructured under ITS to describe SDM requirements with respect to a differently described set of plant conditions, insertion limits. This change is administrative since it does not change any operational restrictions.	3.1.6, 3.1.6 ACTION A, 3.1.6 ACTION B	15.3.10.A.1
3.1.8 A1	Editorial changes, reformatting, and revised numbering.	3.1.7, 3.1.7 NOTE, 3.1.7 ACTION A, 3.1.7 Required Action A.1.1, 3.1.7 Required Action A.1.2, 3.1.7 Required Action B.1, 3.1.7 ACTION C, 3.1.7 Required Action C.1.1, 3.1.7 Required Action C.1.2, 3.1.7 ACTION D	15.3.10.C, 15.3.10.C NOTE, 15.3.10.C.1.a, 15.3.10.C.1.a.(1), 15.3.10.C.1.a.(2), 15.3.10.C.1.a.(3), 15.3.10.C.1.b.(1), 15.3.10.C.1.c, 15.3.10.C.1.c.(1), 15.3.10.C.1.c.(2)
3.1.8 A2	Removes the introductory Applicability statement at the beginning of each CTS section. These statements were strictly informational and did not establish any regulatory requirements.	3.1.7	15.3.10 Applicability
3.1.8 A3	Removes the introductory Objective statement at the beginning of each CTS section. These statements were strictly informational and did not establish any regulatory requirements.	Bases	15.3.10 Objective
3.1.8 A4	The Bases have been completely replaced by revised Bases that reflect the format and applicable content of NUREG-1431.	Bases	Bases
3.1.8 A5	CTS requirements for control rod position indication system and bank demand position indication system operability have been equivalently retained in the ITS, and details related to the available methods of satisfying these requirements have been reflected in the Bases.	3.1.7	15.3.10.C.1

Table A – Administrative Changes
ITS Section 3.1 – Reactivity Control Systems

DOC No.	Description of Change	ITS Requirement	CTS Requirement
3.1.8 A6	CTS requirements that control rods with inoperable individual position indicators or demand indicators be periodically checked for proper position or alignment have been retained in the ITS. This change is administrative since it does not change any operational restrictions.	3.1.7, 3.1.7 ACTION D, 3.1.7 Required Action D.1,	15.3.10.B.1.b.(1)(f), 15.3.10.B.1.b.(2), 15.3.10.B.1.b.(2)(a), 15.3.10.B.1.b.(2)(b), 15.3.10.C.1.a.(3), 15.3.10.C.1.b.(2), 15.3.10.C.1.c.(3)
3.1.9 NONE	NONE	NONE	NONE
3.1.109 A1	Editorial changes, reformatting, and revised numbering.	3.1.8, 3.1.8 ACTION A, 3.1.8 Required Action A.1, 3.1.8 Required Action A.2, 3.1.8 ACTION B, 3.1.8 Required Action B.1, 3.1.8 ACTION C, 3.1.8 Required Action C.1, 3.1.8 ACTION D, 3.1.8 Required Action D.1	15.3.10.G.1, 15.3.10.G.2, 15.3.10.G.3, 15.3.10.G.4
3.1.109 A2	CTS allowances permitting the suspension of requirements related to control rod operability and bank alignment limits, and bank insertion limits have been equivalently reflected in the individual ITS LCOs to which they apply. This change is administrative since it does not change any operational restrictions.	3.1.8	15.3.10.F.4, 15.3.10.G.1
3.1.109 A3	The CTS provision exempting the limitations on positive MTC during low power physics testing have been reflected in the ITS. This change is administrative since it does not change any operational restrictions.	3.1.8	15.3.10.F.1, 15.3.10.G.1
3.1.109 A4	The absence of a CTS exception to SDM requirements during low power physics testing has been clearly delineated in the ITS. This change is administrative since it does not change any operational restrictions.	3.1.8	15.3.10.G.1
3.1.109 A5	The Bases have been completely replaced by revised Bases that reflect the format and applicable content of NUREG-1431.	3.1.8 Bases	Bases

Table A – Administrative Changes
ITS Section 3.1 – Reactivity Control Systems

DOC No.	Description of Change	ITS Requirement	CTS Requirement
3.1.10~~9~~ A6	The CTS requirement to perform shutdown margin calculations once every 24 hours during low power physics testing is changed to an equivalent ITS Surveillance Requirement. This change is administrative since it does not change any operational restrictions.	SR 3.1.8.3	Table 15.4.1-2 Item 34, Table 15.4.1-2 Item 34 Note (21)
3.1.10~~9~~ A7	The CTS allowance permitting an additional Power Range channel to be removed from service during Low Power Physics testing, which also results in an implicit exception to operability requirements for the Overtemperature delta T function and P-10 interlock, has been explicitly stated in the ITS. This change is administrative since it represents a clarification of current plant practice.	3.1.8	Table 15.3.5-2 Item 2.a Note # ~~Item~~, Table 15.3.5-2 Item 2.b Note # ~~Item~~, Table 15.3.5-2 Note # ~~Item~~,
3.1.11NONE	NONE	NONE	NONE

Table L – Less Restrictive Changes
ITS Section 3.1 – Reactivity Control Systems

DOC No.	Description of Change	ITS Requirement	CTS Requirement	Change Type
3.1.1 NONE	NONE	NONE	NONE	NONE
3.1.2 NONE	NONE	NONE	NONE	NONE
3.1.3 L1	The ITS eliminates reporting requirement for predicted vs. observed boron concentration differing by more than 1% delta k/k due to redundancy with other reporting requirements.	N/A	15.4.9	5
3.1.4 L1	The ITS provides a Required Action Completion Time of 24 hours for restoring MTC within its upper limit. This is a relaxation of the current requirement to shutdown the unit to Mode 2 in accordance with CTS 15.3.0.B.	3.1.3 Required Action A.1, 3.1.3 Required Action B.1	15.3.1.F, 15.3.0.B	4
3.1.5 L1	ITS relaxes the current requirement to restore SDM by boration within 1 hour, by requiring initiation of boration to restore SDM within 1 hour.	3.1.4 Required Action A.1.2, 3.1.4 Required Action B.2.1.2, 3.1.4 Required Action D.1.2	15.3.10.B.1.a.(1).(b), 15.3.10.B.1.a.(3).(a), 15.3.10.B.1.b.(1).(a), 15.3.10.B.1.b.(2).(a)	6
3.1.5 L2	The minimum temperature requirement for performing rod drop testing of control rods is decreased under ITS from greater than 540 degrees, to greater than 500 degrees.	SR 3.1.4.3	Table 15.4.1-2 Item 9.a) Note (4)	3
3.1.5 L3	The ITS eliminates cold rod drop testing requirements.	N/A	Table 15.4.1-2 Item 9.a) Note (3)	3
3.1.5 L4	Not used.	N/A	N/A	N/A
3.1.5 L5	The ITS deletes CTS provisions for increased surveillance and conditional frequencies in the event that the computer alarm function for control rod position are inoperable.	N/A	Table 15.4.1-1 Item 19.b, Table 15.4.1-1 Note (18)	4

CHANGE TYPES

1. Relaxation of LCO Requirement
2. Relaxation of Applicability
3. Relaxation of Surveillance Requirement
4. Relaxation of Required Action
5. Relaxation of CTS Reporting Requirements
6. Relaxation of Completion Time
7. Deletion of Requirements Redundant to Regulations

Table L – Less Restrictive Changes
ITS Section 3.1 – Reactivity Control Systems

DOC No.	Description of Change	ITS Requirement	CTS Requirement	Change Type
3.1.5 L6	ITS deletes the requirement that control rod drop timing be performed for control rods that have had maintenance performed based on the application of SR 3.0.1 and SR 3.0.2.	N/A	Table 15.4.1-2 Item 9.a) Note (4)	3
3.1.5 L7	The frequency for rod alignment verifications is extended under ITS from once per shift to once every 12 hours.	SR 3.1.4.1	Table 15.4.1-1 Item 19, Table 15.4.1-1 Item 19.a	3
3.1.6 L1	In the event the SDM is less than the applicable value of Figure 15.3.10-2, CTS 15.3.10.A.1 requires restoring SDM by initiating boration within 15 minutes; in addition, in the event the shutdown banks are not fully withdrawn, CTS 15.3.10.D.1.a requires within 1 hour verifying that the SDM exceeds the applicable value of Figure 15.3.10-2, or within 1 hour restore SDM by boration. The 15-minute boration initiation would also apply in the second case. Instead of both actions, the ITS will require within 1 hour, either verifying SDM within limit or initiating boration to restore SDM to within limit, which overall is less restrictive.	3.1.5 Required Actions A.1.1 and A.1.2	15.3.10.A.1, 15.3.10.D.1.a	4, 6
3.1.6 L2	ITS adds an LCO note under the Applicability statement that- exempts -the shutdown bank insertion limits- during periodic control rod freedom of movement testing.	3.1.5 Applicability NOTE	15.3.10.D.1	1
3.1.6 L3	The frequency for shutdown bank insertion limit verifications is extended under ITS from once per (8-hour) shift to once every 12 hours.	SR 3.1.5.1	Table 15.4.1-1 Item 19, Table 15.4.1-1 Item 19.a	3
3.1.7 L1	ITS relaxes the CTS requirement to restore SDM by initiating boration within 15 minutes, by requiring initiation of boration to restore SDM within 1 hour. See DOC 3.1.6-L1.	3.1.6 Required Actions A.1.1 and A.1.2	15.3.10.A.1, 15.3.10.D.2.a	4, 6
3.1.7 L2	ITS adds an LCO note under the Applicability statement that exempts the control bank insertion limits- during periodic control rod freedom of movement testing.	3.1.6 Applicability NOTE	15.3.10.D.2	1
3.1.7 L3	The ITS deletes increased surveillance frequency requirements in the event that the rod insertion limit alarm is inoperable.	3.1.6 SRs	Table 15.4.1-1 Item 19 Note (8)	4

CHANGE TYPES

1. Relaxation of LCO Requirement
2. Relaxation of Applicability
3. Relaxation of Surveillance Requirement
4. Relaxation of Required Action
5. Relaxation of CTS Reporting Requirements
6. Relaxation of Completion Time
7. Deletion of Requirements Redundant to Regulations

Table L – Less Restrictive Changes
ITS Section 3.1 – Reactivity Control Systems

DOC No.	Description of Change	ITS Requirement	CTS Requirement	Change Type
3.1.7 L4	The frequency for control bank insertion limit verifications is extended under ITS from once per (8-hour) shift to once every 12 hours.	SR 3.1.6.2	Table 15.4.1-1 Item 19, Table 15.4.1-1 Item 19.a	3
3.1.7 L5	In the event control bank insertion limits, or control bank sequence or overlap limits are not restored within 2 hours, the CTS requires placing the unit in Hot Shutdown (subcritical by a specified amount of at least 1% $\Delta k/k$, with T_{avg} = 540°F) within 6 hours. The ITS requires that the plant be placed in Hot Standby, Mode 2 with $k_{eff} < 1.0$ (but no RCS temperature constraints). The ITS is less restrictive because the unit does not have to be subcritical by more than a specific amount.	3.1.6 Required Action C.1	15.3.10.D.2.c	2
3.1.8 L1	The CTS frequency for calibration of individual control rod position indicators has been extended under ITS from each refueling interval, to prior to reactor criticality after each removal of the reactor head.	SR 3.1.7.1	Table 15.4.1-1 Item 19	3
3.1.8 L2	Not used.	N/A	N/A	N/A
3.1.9 NONE	NONE	NONE	NONE	NONE
3.1.10 L1	The upper reactor power limit for Low Power Physics test exceptions is extended from = 2% RTP, to = 5% RTP.	3.1.8	15.3.10.F.1, 15.3.10.G.1	2
3.1.11 NONE	NONE	NONE	NONE	NONE

CHANGE TYPES

1. Relaxation of LCO Requirement
2. Relaxation of Applicability
3. Relaxation of Surveillance Requirement
4. Relaxation of Required Action
5. Relaxation of CTS Reporting Requirements
6. Relaxation of Completion Time
7. Deletion of Requirements Redundant to Regulations

Table M – More Restrictive Changes
ITS Section 3.1 – Reactivity Control Systems

DOC No.	Description of Change	ITS Requirement	CTS Requirement
3.1.1 M1	The CTS provision that only required performance of SDM calculations during low power physics testing has been expanded in the ITS; expanding SDM calculation requirements to include Mode 2 (with $K_{eff} < 1.0$), and Modes 3, 4, or 5.	SR 3.1.1.1	Table 15.4.1-2 Item 34 and Note (21)
3.1.2 NONE	NONE	NONE	NONE
3.1.3 M1	Explicit time frames and increased frequencies have been added for performance of a reactivity balance Surveillance Requirements.	SR 3.1.2.1	15.4.9
3.1.3 M2	The ITS adds Actions requiring an evaluation to determine that core conditions are acceptable for continued operation, and the establishment of any necessary operational restrictions and surveillance requirements, in the event of a reactivity anomaly.	3.1.2 Required Action A.2, 3.1.2 ACTION B, 3.1.2 Required Action B.1	15.4.9
3.1.4 M1	Addition of an ITS Surveillance Requirement to verify that MTC requirements are being met.	SR 3.1.3.1	15.4.9
3.1.5 M1	The ITSs delete the CTS allowance of 6 hours for a control rod operability determination.	N/A	15.3.10.B.1
3.1.5 M2	The ITS replaces the conditional CTS provision allowing continuous operation with one untrippable control rod with a new requirement that the unit be shutdown whenever one or more control rods is determined to be untrippable.	3.1.4 ACTION A, 3.1.4 Required Action A.2.	15.3.10.B.1.a.(1)(a), 15.3.10.B.1.a.(1)(c), 15.3.10.B.1.a.(2), 15.3.10.B.1.a.(2)(a), 15.3.10.B.1.a.(2)(b), 15.3.10.B.1.a.(2)(c)
3.1.5 M3	ITS adds a new restriction in the event of a misaligned control rod allowing continuous operations with reactor power less than or equal to 75% RTP. (ITS 3.1.4 Required Action B.2.1.2 does not allow for operation above 75% RTP.). The new restriction requires performance of an evaluation and confirmation of the safety analysis results within 5 days of the control rod misalignment.	3.1.4 Required Action B.2.6	15.3.10.B.1.b.(1)(g)
3.1.5 M4	ITS increases the minimum required reactor coolant temperature for performing control rod drop testing from 360 degrees F to 500 degrees F.	SR 3.1.4.3	15.3.10.H.1
3.1.5 M5	The time allowed to reduce reactor power below 75% in the event of a misaligned control rod is reduced from 8 hours to 2 hours under ITS.	3.1.4 Required Action B.2.2	15.3.10.B.1.b.(1)(b)
3.1.5 M6	The requirement to periodically test control rods by partial movement of all rods is expanded under ITS to require movement of the control rods by at least ten steps in either direction.	SR 3.1.4.2	Table 15.4.1-2 Item 10

Table M – More Restrictive Changes
ITS Section 3.1 – Reactivity Control Systems

DOC No.	Description of Change	ITS Requirement	CTS Requirement
3.1.5 M7	ITS expands the Applicability of requirements for shutdown and control rod operability (trippable and aligned) ~~are extended~~ from power and low power operations, to Modes 1 and 2, adding subcritical conditions in Mode 2 to the Applicability.	3.1.4 Applicability	15.3.10.B.1
3.1.6 M1	The Applicability of the requirement for shutdown bank withdrawal is extended under ITS to include subcritical conditions in Mode 2. Accordingly, the Applicability for shiftly control rod alignment channel checks has ~~also~~ been similarly extended.	3.1.5, SR 3.1.5.1	15.3.10.D.1, Table 15.4.1-1 Item 19, Table 15.4.1-1 Item 19.a)
3.1.7 M1	Addition of ITS Conditions, Actions and Surveillance Requirements for control bank sequence and overlap limits.	3.1.6 ACTION B, 3.1.6 Required Action B.1.1, 3.1.6 Required Action B.1.2, 3.1.6 Required Action B.2, 3.1.6 ACTION C, SR 3.1.6.3	15.3.10.D.2.a and b, Table 15.4.1-1 Item 19
3.1.7 M2	Addition of an ITS Surveillance Requirement to verify control bank positions calculated as part of the estimated critical condition (ECC) are within limits prior to criticality.	SR 3.1.6.1	Table 15.4.1-1 Item 19
3.1.8 M1	ITS provides an additional restriction on continued operation with inoperable position indication for a single control between 75% power and 50% power unless a verification of control rod position has been performed.	3.1.7 Required Action D.1	15.3.10.B.1.b.(1)(a), 15.3.10.B.1.b.(1)(b), 15.3.10.B.1.b.(1)(c), 15.3.10.B.1.b.(1)(d), 15.3.10.B.1.b.(1)(e), 15.3.10.B.1.b.(1)(g), 15.3.10.C.1.a.(3), 15.3.10.C.1.b.(2), 15.3.10.C.1.c.(3)
3.1.8 M2	The ITS Applicability is extended from greater than or equal to 10% power, to ITS Modes 1 and 2 in order to provide consistency with other LCOs that rely on control rod position indication to satisfy control rod alignment requirements.	3.1.7 Applicability	15.3.10.C.1
3.1.8 M3	The Applicability of the requirement for control rod position indication channel calibration is extended under ITS from greater to or equal to 10% power, to Modes 1 and 2.	SR 3.1.7.1	Table 15.4.1-1 Item 19

Table M – More Restrictive Changes
ITS Section 3.1 – Reactivity Control Systems

DOC No.	Description of Change	ITS Requirement	CTS Requirement
3.1.9 M1	At power physics test exception requirements are no longer used and are deleted.	N/A	15.3.10.F
3.1.10 M1	ITS increases the minimum required RCS average loop temperature for performing low power physics testing to a minimum temperature of 530 degrees F.	3.1.8, 3.1.8 ACTION C	15.3.10.G.1, 15.3.10.G.4
3.1.10 M2	ITS adds Surveillance Requirements to ensure that reactor power level and RCS temperature are within the specified limits when using the low power physics test exceptions.	SR 3.1.8.1, SR 3.1.8.2	15.3.10.G
3.1.11 NONE	NONE	NONE	NONE

Table R – Relocated Specifications and Removed Details
ITS Section 3.1 – Reactivity Control Systems

DOC No.	CTS Requirement	Description of Relocated Requirements	Location	Change Control Process	Change Type
3.1.1 LA1	15.3.10.A.1, 15.3.10.A.2, Figure 15.3.10-2	Shutdown margin limits.	COLR	COLR Program described in ITS 5.6.4.	1
3.1.2 NONE	NONE	NONE	NONE	NONE	NONE
3.1.3 NONE	NONE	NONE	NONE	NONE	NONE
3.1.4 NONE	NONE	NONE	NONE	NONE	NONE
3.1.5 LA1	Table 15.4.1-2 #9.b)	Control of rod worth measurement testing.	TRM	10 CFR 50.59	3
3.1.6 LA1	15.3.10.A.1, 15.3.10.D.1.a, Figure 15.3.10-1, Figure 15.3.10-2	SDM margin limits, and control and shutdown rod insertion limits.	COLR	COLR Program described in ITS 5.6.4.	1
3.1.7 LA1	15.3.10.A.1, 15.3.10.D.1, 15.3.10.D.2, 15.3.10.D.2.a, Figure 15.3.10-1, Figure 15.3.10-2	SDM margin limits, and control and shutdown rod insertion limits.	COLR	COLR Program described in ITS 5.6.4.	1
3.1.7 LA2	15.3.10.D.1, Figure 15.3.10-2	Details related to what constitutes a fully withdrawn control rod, allowing a control rod to be -at position 225 or higher.	COLR	COLR Program described in ITS 5.6.4.	3
3.1.8 LA1	15.3.10.C.1.a.(2), 15.3.10.C.1.b.(1)	Details related to acceptable methods for verifying the position of control rods with inoperable position indication.	Bases	Bases Control Program described in ITS 5.5.13.	3
3.1.9 NONE	NONE	NONE	NONE	NONE	NONE
3.1.10 NONE	NONE	NONE	NONE	NONE	NONE

CHANGE TYPES

1. Details of System Design and System Description including Design Limits
2. Description of System or Plant Operation
3. Procedural Details for Meeting TS Requirement and Relocated Reporting Requirements
4. Relocated Redundant Requirements

Table R – Relocated Specifications and Removed Details
ITS Section 3.1 – Reactivity Control Systems

DOC No.	CTS Requirement	Description of Relocated Requirements	Location	Change Control Process	Change Type
3.1.11 NONE	NONE	NONE	NONE	NONE	NONE

CHANGE TYPES

1. Details of System Design and System Description including Design Limits
2. Description of System or Plant Operation
3. Procedural Details for Meeting TS Requirement and Relocated Reporting Requirements
4. Relocated Redundant Requirements

Table A – Administrative Changes
ITS Section 3.2 – Power Distribution Limits

DOC No.	Description of Changes	ITS Requirement	CTS Requirement
3.2.1 A1	Editorial changes, reformatting, and revised numbering.	3.2.1, 3.2.1 Required Action A.1, 3.2.1 ACTION C, SR 3.2.1.1, SR 3.2.1.2, Bases	15.3.10.E.1, 15.3.10.E.1.b, 15.3.10.E.1.b.(1)(d), Table 15.4.1-02 Item 33, Table 15.4.1-02 Item 33 Note (20)
3.2.1 A2	The presentation of CTS Required Actions when $F_Q(Z)$ limits are not met is modified under ITS to replace the listing of Actions to be performed after reducing thermal power with individual actions in the ITS that are sequenced by virtue of their stated Completion Times. This change is administrative because it does not change any operational restrictions.	3.2.1	15.3.10.E.1.b.(1)
3.2.1 A3	The CTS requirement to verify $F_Q(Z)$ prior to increasing reactor power, or increasing any reactor trip setpoint that was adjusted for an $F_Q(Z)$ violation, is equivalently retained in the ITS. This change is administrative because it does not change any operational restrictions.	3.2.1 ACTION A Note, 3.2.1 Required Action A.4	15.3.10.E.1.b.(1)(c)
3.2.1 A4	The Bases have been completely replaced by revised Bases that reflect the format and applicable content of NUREG-1431.	3.2.1 Bases	Bases
3.2.1 A5	Removes the introductory Applicability statement at the beginning of each CTS section. These statements were strictly informational and did not establish any regulatory requirements.	3.2.1 title	15.3.10 Applicability
3.2.1 A6	Removes the introductory Objective statement at the beginning of each CTS section. These statements were strictly informational and did not establish any regulatory requirements.	3.2.1 Bases	15.3.10 Objective
3.2.2 A1	Editorial changes, reformatting, and revised numbering.	3.2.2, 3.2.2 ACTION A, 3.2.2 Required Action A.1.1, 3.2.2 Required Action A.1.2.1, 3.2.2 Required Action A.1.2.2, 3.2.2 Required Action A.3, 3.2.2 ACTION B, SR 3.2.2.1, SR 3.2.2.2	15.3.10, -15.3.10.E.1.c, 15.3.10.E.1.c.(1), 15.3.10.E.1.c.(2), 15.3.10.E.1.c.(4), 15.3.10.E.1.c.(5), 15.3.10.E.1.c.(6), 15.3.10.E.1.c.(7), Table 15.4.10-2 Item 33, Table 15.3.10-2 Item 33 Note (20)
3.2.2 A2	Removes the introductory Applicability statement at the beginning of each CTS section. These statements were strictly informational and did not establish any regulatory requirements.	3.2.2 title	15.3.10 Applicability

Table A – Administrative Changes
ITS Section 3.2 – Power Distribution Limits

DOC No.	Description of Changes	ITS Requirement	CTS Requirement
3.2.2 A3	Removes the introductory Objective statement at the beginning of each CTS section. These statements were strictly informational and did not establish any regulatory requirements.	3.2.2 Bases	15.3.10 Objective
3.2.2 A4	The presentation of CTS requirements requiring verification of $F^N_{\Delta H}$ prior to exceeding 50% and 75% power when $F^N_{\Delta H}$ limits have been exceeded has been equivalently reflected in the ITS. This change is administrative because it does not change any operational restrictions.	3.2.2 ACTION A Note, 3.2.2 Required Action A.3 Note	15.3.10.E.1.c.(2),
3.2.2 A5	The Bases have been completely replaced by revised Bases that reflect the format and applicable content of NUREG-1431.	3.2.2 Bases	Bases
3.2.3 A1	Editorial changes, reformatting, and revised numbering.	3.2.3, LCO 3.2.3 Note, 3.2.3 ACTION A	15.3.10, 15.3.10.E.2 Note, 15.3.10.E.2.a, 15.3.10.E.2.a.(1)
3.2.3 A2	Removes the introductory Applicability statement at the beginning of each CTS section. These statements were strictly informational and did not establish any regulatory requirements.	3.2.3 title	15.3.10 Applicability
3.2.3 A3	Removes the introductory Objective statement at the beginning of each CTS section. These statements were strictly informational and did not establish any regulatory requirements.	3.2.3 Bases	15.3.10 Objective
3.2.3 A4	The Bases have been completely replaced by revised Bases that reflect the format and applicable content of NUREG-1431.	3.2.3 Bases	Bases
3.2.4 A1	Editorial changes, reformatting, and revised numbering.	3.2.4, 3.2.4 ACTION A, 3.2.4 Required Action A.4, 3.2.4 Required Action A.5 Note 1, 3.2.4 Required Action A.5 Note 2, 3.2.4 Required Action A.6 Note, 3.2.4 ACTION B, 3.2.4 Required Action B.1, SR 3.2.4.2	15.3.10.E.3, 15.3.10.E.3.a, 15.3.10.E.3.a.(3), 15.3.10.E.3.a.(4), 15.3.10.E.3.a.(5), 15.3.10.E.3.a.(6), 15.3.10.E.3.c
3.2.4 A2	Removes the introductory Applicability statement at the beginning of each CTS section. These statements were strictly informational and did not establish any regulatory requirements.	3.2.4	15.3.10 Applicability

Table A – Administrative Changes
ITS Section 3.2 – Power Distribution Limits

DOC No.	Description of Changes	ITS Requirement	CTS Requirement
3.2.4 A3	Removes the introductory Objective statement at the beginning of each CTS section. These statements were strictly informational and did not establish any regulatory requirements.	3.2.4 Bases	15.3.10 Objective
3.2.4 A4	Modifies CTS terminology related to adjustment of the excore detectors to eliminate indication of quadrant power tilt from "calibrate" to the equivalent term "normalize" in ITS 3.2.4 Action A.5.	3.2.4 Required Action A.5	15.3.10.E.3.a.(4)
3.2.4 A5	The Bases have been completely replaced by revised Bases that reflect the format and applicable content of NUREG-1431.	3.2.4 Bases	Bases
3.2.4 A6	The presentation of CTS requirements to periodically verify that FQ(Z) and $F^N_{\Delta H}$ are within limits whenever QPTR is not within limits is reflected in the ITS as Surveillance Requirements.	3.2.4 Required Action A.3	15.3.10.E.3.a.(2)

Table L – Less Restrictive Changes
ITS Section 3.2 – Power Distribution Limits

DOC No.	Description of Change	ITS Requirement	CTS Requirement	Change Type
3.2.1 L1	ITS relaxes the implied Applicability for the FQ thermal limit from Power Operation (greater than 2% power) under CTS, to ITS Mode 1 (greater than 5% power) by virtue of changes resulting from adoption of -the ITS definition of Mode 1.	3.2.1, 3.2.1 Required Action C.1	15.3.10.E.1, 15.3.10.E.1.b.(1)(d), NEW	2
3.2.1 L2	ITS extends the time allowed to reduce the Power Range Neutron High Flux Trip setpoint when $F_Q(Z)$ is not within limits from 8 hours to 72 hours.	3.2.1 Required Action A.2	15.3.10.E.1.b.(1)(a)	6
3.2.1 L3	The CTS requirement to reduce the Overtemperature Delta Temperature Trip setpoint when $F_Q(Z)$ is not within limits has been deleted.	DELETED	15.3.10.E.1.b.(1)(b)	4
3.2.1 L4	The ITS provides separate limits for the FWQ(Z) and FCQ(Z) inputs to $F_Q(Z)$ which are a relaxation to the existing requirement since they provide additional operating flexibility and allow entry into separate Conditions that are appropriate to the specific limit that has been exceeded.	3.2.1, 3.2.1 ACTION A, 3.2.1 ACTION B, 3.2.1 ACTION B Note, 3.2.1 Required Action B.1, 3.2.1 Required Action B.2, 3.2.1 Required Action B.3, 3.2.1 Required Action B.4, SR 3.2.1.1, SR 3.2.1.2,	15.3.10.E.1.b.(1)(a), 15.3.10.E.1.b.(1)(b), Table 15.4.1-2 Item 33, NEW	1
3.2.1 L5	ITS relaxes the CTS implied Applicability for Actions associated with the FQ thermal limit from Power Operation (greater than 2% power) to ITS Mode 1 (greater than 5% power) by virtue of changes resulting from adoption of the ITS definition of MODE 1.	3.2.1 Required Action C.1	15.3.10.E.1.b.1.(d)	2
3.2.2 L1	The CTS requirement to restore $F^N_{\Delta H}$ by performing a power reduction is modified under ITS to require restoration, but without stipulating the manner by which compliance must be achieved.	N/A	15.3.10.E.1.c	4

CHANGE TYPES

1. Relaxation of LCO Requirement
2. Relaxation of Applicability
3. Relaxation of Surveillance Requirement
4. Relaxation of Required Action
5. Relaxation of CTS Reporting Requirements
6. Relaxation of Completion Time
7. Deletion of Requirements Redundant to Regulations

Table L – Less Restrictive Changes
ITS Section 3.2 – Power Distribution Limits

DOC No.	Description of Change	ITS Requirement	CTS Requirement	Change Type
3.2.2 L2	ITS extends the time allowed to reduce the Power Range Neutron High Flux Trip setpoint when $F^N_{\Delta H}$ is not within limits from 8 hours to 72 hours.	3.2.2 Required Action A.1.2.2	15.3.10.E.1.c.(2)	6
3.2.2 L3	ITS relaxes the CTS implied Applicability for the $F^N_{\Delta H}$ thermal limit from Power Operation (greater than 2% power) to Mode 1 (greater than 5% power) by virtue of changes resulting from adoption of the ITS definition of Mode 1.	3.2.2, 3.2.2 Required Action B.1	15.3.10.E.1.a, 15.3.10.E.1.c.(7)	2
3.2.3 L1	The CTS requirement to restore AFD within limits by any means, or reduce power to restore AFD within limits within the next 3 hours is modified under ITS to no longer stipulate the manner by which compliance with AFD limits may be achieved.	3.2.3 ACTION A	15.3.10.E.2.a, 15.3.10.E.2.a.(1),	4
3.2.3 L2	The CTS requirement to reduce the High Neutron Flux Trip setpoint to less than or equal to 55% power if AFD cannot be restored within limits has been modified under ITS to require reduction of THERMAL POWER to less than or equal to 50% RTP if AFD cannot be restored.	3.2.3 ACTION A	15.3.10.E.2.b	4
3.2.3 L3	The CTS requirement to periodically verify that AFD is within limits when the alarm is inoperable has not been retained in the ITS.	N/A	15.3.10.E.2.c	4
3.2.4 L1	The CTS requirement that $F_Q(Z)$ and $F^N_{\Delta H}$ be verified within 24 hours when QPTR is not within limits has been modified under ITS to allow verification within 24 hours of achieving rated thermal power after core tilt can be normalized.	3.2.4 Required Action A.3, 3.2.4 Required Action A.6	15.3.10.E.3.a.(2), 15.3.10.E.3.a.(5)	4
3.2.4 L2	The CTS requirement to periodically verify that QPTR is within limits when the alarm that monitors QPTR is inoperable has been deleted based on the availability of other methods for monitoring QPTR.	N/A	15.3.10.E.3.b	4
3.2.4 L3	ITS adds a provision for monitoring QPTR with more than one power range monitor channel inoperable using direct measurements from the incore detectors.	SR 3.2.4.2 Note	15.3.10.E.3.c	4

CHANGE TYPES

1. Relaxation of LCO Requirement
2. Relaxation of Applicability
3. Relaxation of Surveillance Requirement
4. Relaxation of Required Action
5. Relaxation of CTS Reporting Requirements
6. Relaxation of Completion Time
7. Deletion of Requirements Redundant to Regulations

Table M – More Restrictive Changes
ITS Section 3.2 – Power Distribution Limits

DOC No.	Description of Change	ITS Requirement	CTS Requirement
3.2.1 M1	The CTS requirement to reduce power to the point where FQ is restored when FQ is not within limits is expanded under ITS to specify an amount by which power must be reduced for each percent by which the calculated peaking factor (FCQ) limit is exceeded.	3.2.1 Required Action A.1	15.3.10.E.1.b
3.2.1 M2	The CTS requirement to reduce the Power Range Neutron High Flux Trip and Overpower Delta Temperature trip setpoint by a specific amount is expanded under ITS to specify an amount by which power must be reduced for each percent by which the $F_Q(Z)$ limit is exceeded.	3.2.1 Required Action A.2, 3.2.1 Required Action A.3	15.3.10.E.1.b.(1)(a), 15.3.10.E.1.b.(1)(b)
3.2.1 M3	The CTS frequency for performing FQ verifications is increased in accordance with NUREG 1431 and WCAP 10216 to require performance prior to exceeding 75% power following an outage under the ITS instead of prior to exceeding 90% power. Additionally, a requirement has been added to perform the FQ verification within 12 hours of achieving equilibrium conditions after exceeding the thermal power where FCQ(Z) or FWQ(Z) were last verified by more than 10%.	SR 3.2.1.1, SR 3.2.1.2	Table 15.4.1-2 Item 33
3.2.2 M1	The CTS frequency for performing $F^N_{\Delta H}$ verifications when the limit has been exceeded is expanded under ITS to require this verification within 24 hours without regard to whether there has been a prior power escalation.	3.2.2 ACTION A Note, 3.2.2 Required Action A.2	15.3.10.E.1.c.(2), 15.3.10.E.1.c.(3)
3.2.2 M2	The CTS frequency for performing $F^N_{\Delta H}$ verifications is increased under ITS to require performance prior to exceeding 75% power following an outage instead of prior to exceeding 90% power.	SR 3.2.2.1	Table 15.4.1-2 Item 33 Note (20)
3.2.2 M3	The CTS requirement to reduce the Power Range high flux trip setpoint to less than or equal to 58% power if $F^N_{\Delta H}$ cannot be restored within limits has been modified under ITS to require reduction of the Power Range high flux trip setpoint to less than or equal to 55% power if $F^N_{\Delta H}$ cannot be restored.	3.2.2 Required Action A.1.2.2	15.3.10.E.1.c.(2)
3.2.3 M1	ITS adds a new requirement to periodically verify AFD is within limits.	SR 3.2.3.1	N/A
3.2.3 M2	The CTS requirement to restore AFD within 15 minutes; or within the next three hours either restore AFD via power reduction, or reduce power to less than or equal to 50%; is modified under ITS to require that power be reduced to less than or equal to 50% within three hours.	3.2.3 Required Action A.1	15.3.10.E.2.a.(1)(b)
3.2.4 M1	The CTS requirement to reduce thermal power by 2% of rated thermal power for each percent of indicated quadrant power tilt is modified under ITS to require a 3% reduction in rated thermal power for each percent that QPTR is greater than 1.00.	3.2.4 Required Action A.1	15.3.10.E.3.a.(1)
3.2.4 M2	The CTS requirement to reduce thermal power by a specified value when QPTR is not within limits is modified under ITS to require periodic QPTR verification and subsequent thermal power reductions as needed to restore QPTR within limits in addition to an initial reduction in thermal power.	3.2.4 Required Action A.1, 3.2.4 Required Action A.2	N/A

Table M – More Restrictive Changes
ITS Section 3.2 – Power Distribution Limits

DOC No.	Description of Change	ITS Requirement	CTS Requirement
3.2.4 M3	ITS adds a new requirement to periodically verify QPTR is within limits.	SR 3.2.4.1	N/A

Table R – Relocated Specifications and Removed Details
ITS Section 3.2 – Power Distribution Limits

DOC No.	CTS Requirement	Description of Relocated Requirements	Location	Change Control Process	ChangeType
3.2.1 LA1	15.3.10.E.1.a, Figure 15.3.10-3, Table 15.4.1-2 Item 33	The CTS FQ limit and K(Z) figures have been relocated to the Core Operating Limits Report (COLR).	COLR	COLR Program described in ITS 5.6.4.	1
3.2.1 LA2	Table 15.4.1-2 Item 33	Details in the CTS related to the method used to provide verification that thermal limits are being met have been relocated to the Bases.	3.2.1 Bases	Bases Control Program described in ITS 5.5.13	3
3.2.2 LA1	15.3.10.E.1.a, Table 15.4.1-2 Item 33	The CTS $F^N_{\Delta H}$ limit has been relocated to the COLR.	COLR	COLR Program described in ITS 5.6.4.	1
3.2.2 LA2	Table 15.4.1-2 Item 33	Details in the CTS related to the method used to provide verification that thermal limits are being met have been relocated to the Bases.	3.2.2 Bases	Bases Control Program described in ITS 5.5.13	3
3.2.2 R1	15.3.11, 15.3.11.A, 15.3.11.B	CTS requirements for the Movable Incore Detector System have been relocated to the Technical Requirements Manual.	TRM	10 CFR 50.59	N/A
3.2.3 LA1	15.3.10.E.2.a, Figure 15.3.10-4	The Axial Flux Difference limits in the CTS have been relocated to the COLR.	COLR	COLR Program described in ITS 5.6.4.	1
3.2.4 NONE	NONE	NONE	NONE	NONE	NONE

CHANGE TYPES

1. Details of System Design and System Description including Design Limits
2. Description of System or Plant Operation
3. Procedural Details for Meeting TS Requirement and Relocated Reporting Requirements
4. Relocated Redundant Requirements

Table A – Administrative Changes
ITS Section 3.3 – Instrumentation

DOC No.	Description of Change	ITS Requirement	CTS Requirement
3.3.1 A1	Editorial changes, reformatting, and revised numbering of Reactor Protection System (RPS) instrumentation requirements. ITS – CTS RPS Function correspondence follows: * separate requirements below MODES 1 and 2	3.3.1 Table 3.3.1-1 Functions 1.a, 2.a, 2.b, 3, 4.a, 4.b, 5, 6, 7.a, 7.b, 8, 9.a, 9.b, 11, 12, 13, 14.a, 14.b, 15.a, 15.b, 16, 17.a, 17.b.(2), 17.c, 17.d, 17.e, 18.a, 19.a, 20.a, 20.b, 21.a	15.2.3, 15.3.5 Table 15.3.5-2 Items 2.a, 2.b, 5, 6, 7, 8, 9, 10.b, 11.a, 11.b, 13, 15; 15.4.1 Table 15.4.1-1 Items 1.b, 4, 4.a, 4.b, 5.a, 5.b, 6, 7, 8, 9, 11.b, 12, 45.a, 45.b, 45.c, 45.d, 45.e, Table 15.4.1-2 Items 24.a, 25.a

ITS RPS Function Title	ITS/CTS Table:	ITS 3.3.1-1	CTS 15.3.5-2	CTS 15.4.1-1	CTS 15.4.1-2
Manual Reactor Trip*		1	1	—	24.b, 25.c
Power Range Neutron Flux High		2.a	2.b	1.a, 1.b	—
Power Range Neutron Flux Low		2.b	2.a	1.b	—
Intermediate Range Neutron Flux		3	3	2.a, 2.b	—
Source Range Neutron Flux*		4	4	3.a, 3.b	—
Overtemperature ΔT		5	5	1.c, 4.a	—
Overpower ΔT		6	6	4.b	—
Pressurizer Pressure Low		7.a	7	—	—
Pressurizer Pressure High		7.b	8	7	—
Pressurizer Water Level – High		8	9	6	—
Reactor Coolant Flow Low Single Loop		9.a	10.a	5.a	—
Reactor Coolant Flow Low Two Loops		9.b	10.b	5.b	—
RCP Breaker Position Single Loop		10.a	16.a	—	—
RCP Breaker Position Two Loops		10.b	16.b	—	—
Undervoltage Bus A01 & A02		11	14.a	11.b	—
Underfrequency Bus A01 & A02		12	14.b	12	—
Steam Generator (SG) Water Level – Low Low		13	13	8	—
SG Water Level – Low		14.a	—	—	—
– Coincident with Steam/Feedwater Flow Mismatch		14.b	12	9	—
Turbine Trip Low Autostop Oil Pressure		15.a	11.a	15.a	—
Turbine Trip Stop Valve Closure		15.b	11.b	15.b	—
Safety Injection (SI) Input from ESFAS		16	15	16	—
Reactor Trip System Interlocks:		17	—	45	—
Intermediate Range Neutron Flux, P-6		17.a	—	45.a	—
Low Power Reactor Trips Block, P-7		17.b	—	—	—
Power Range Neutron Flux		17.b.(1)	—	—	—
Turbine Impulse Pressure		17.b.(2)	—	45.e	—
Power Range Neutron Flux , P-8		17.c	—	45.b	—
Power Range Neutron Flux , P-9		17.d	—	45.c	—
Power Range Neutron Flux , P-10		17.e	—	45.d	—
Reactor Trip Breakers (RTBs)*		18	17	—	—
RTB Undervoltage and Shunt Trip Mechanisms*		19	—	—	24.a
Reactor Trip Bypass Breaker and Associated Undervoltage Trip Mechanisms *		20	—	—	25.a
Automatic Trip Logic*		21	—	44.a	—

Table A – Administrative Changes
ITS Section 3.3 – Instrumentation

DOC No.	Description of Change	ITS Requirement	CTS Requirement
3.3.1 A2	The Bases have been completely replaced by revised Bases that reflect the format and applicable content of NUREG-1431.	3.3.1 Bases	Bases for 15.2.3, 15.3.5, and 15.4.1
3.3.1 A3	Changes CTS instrumentation Table column heading from "Minimum Operable Channels" to "Required Channels."	3.3.1, Table 3.3.1-1	15.3.5.C, Table 15.3.5-2
3.3.1 A4	Changes CTS instrumentation Table column heading from "Permissible Bypass Conditions" to "Applicable Modes."	Table 3.3.1-1	Table 15.3.5-2
3.3.1 A5	Not used.	N/A	N/A
3.3.1 A6	Deletes CTS Note exempting the Intermediate and Source Range Neutron Flux instruments from action requirements in the event of one or more required channels are inoperable when a block condition exists. This change is administrative, because the ITS usage rules require LCOs to be met during the MODES or other specified condition in the Applicability. When the Intermediate and Source Range Neutron Flux trip functions are blocked, they are not in applicable MODES and are not required to be OPERABLE.	LCO 3.0.1 Table 3.3.1-1 Functions 3 and 4, Applicable Modes	Table 15.3.5-2 Note *
3.3.1 A7	Implements the STS definition of MODES to the several RPS functions, consistent with the CTS applicability requirements.	Table 3.3.1-1 Functions 2.a, 5, 6, 7.a, 7.b, 13, 14.a, 14.b, and 16	Table 15.3.5-2 Items 2.b, 5, 6, 8, 12, 13, and 15 Table 15.4.1-1 Items 1.c, 7, 8, and 16
3.3.1 A8	Implements the STS definition of MODES to the several RPS functions, consistent with the CTS applicability requirements.	Table 3.3.1-1 Functions 2.b, 3, 4.a, 5, 6, 9.a, 10.a, 10.b, 15.a, and 15.b	Table 15.3.5-2 Items 2.a, 3, 11.a, 11.b, 16.a, 16.b 3 Table 15.4.1-1 Items 3.b, 4.a, 4.b, 5.a, 15.a, and 15.b
3.3.1 A9	Implements the STS definition of MODES to the Reactor Trip Breakers, consistent with the CTS applicability requirements.	Table 3.3.1-1 Functions 18.a and 18.b	Table 15.3.5-2 Item 17 Table 15.4.1-2 Item 24.a
3.3.1 A10	Changes CTS Required Channels of Safety Injection (SI) input to RPS from "See Table 15.3.5-3" to "2 trains." This is an administrative change, because it is more consistent with the portion of the SI circuit which provides the input to the Reactor Trip System.	Table 3.3.1-1 Function 16	Table 15.3.5-2 Item 15

Table A – Administrative Changes
ITS Section 3.3 – Instrumentation

DOC No.	Description of Change	ITS Requirement	CTS Requirement
3.3.1 A11	CTS Table 15.4.1-1 Note (1) relaxes requirements for surveillances during periods of cold shutdown and refueling shutdown until prior to taking unit critical, if not performed during the previous surveillance period. This note is replaced by the ITS SR applicability rules. This change is administrative, because these rules require surveillances to be met during the MODES in the Applicability for an individual LCO, and do not allow entry into a MODE in the applicability of an LCO unless the LCO's surveillances have been met within their specified frequency.	SR 3.0.1 SR 3.0.4 Table 3.3.1-1 Functions 2.a, 3, 5, 6, 9.a, 8, 7.b, 13, 14, 11, 15.a, 15.b, 16, and 21	Table 15.4.1-1 Item 2.a Table 15.4.1-1 Note (1) for Items 1.a, 1.b, 2.a, 4.a, 4.b, 5, 5.a, 6, 7, 8, 9, 11.b, 15.a, 15.b, 16, and 44
3.3.1 A12	Reorganizes CTS requirements for Nuclear Power Range instrumentation by grouping surveillances together based on the high setting or low setting trip functions, and clarifies that the daily heat balance only applies to the Power Range Neutron Flux - High trip function in MODES 1 and 2.	SR 3.3.1.1, SR 3.3.1.2, SR 3.3.1.7, Table 3.3.1-1 Functions 2.a and 2.b	Table 15.4.1-1 Items 1.a and 1.b
3.3.1 A13	Retains CTS Note specifying that tests of the low power trip bistable setpoints which cannot be done during power operations shall be conducted prior to reactor criticality, if not done in the previous surveillance interval. ITS requires equivalent testing (CHANNEL OPERATIONAL TEST) of the Power Range Neutron Flux – Low instrumentation prior to reactor startup, when not performed within the previous 92 days.	Table 3.3.1-1 Function 5 SR 3.3.1.8	Table 15.4.1-1 Note (2) for Item 1.b
3.3.1 A14	Deletes CTS Note modifying the requirement to compare results of the incore detector measurements to the Nuclear Instrumentation System (NIS) axial flux difference. The Note specifies that the requirements of CTS 15.3.10.E, Power Distribution limits (Hot Channel Factors, Axial Flux Difference, and Quadrant Power Tilt) (ITS Section 3.2) must be met to confirm the hot channel factor limits are being satisfied. This is an administrative change, because meeting the requirements of ITS 3.2.1, 3.2.3, and 3.2.4 is not influenced by the performance of a comparison of incore detector measurements to NIS axial flux difference.	Table 3.3.1-1 Function 5 SR 3.3.1.3	Table 15.4.1-1 Note (20) for Item 1.c and 4.a
3.3.1 A15	Changes CTS requirement for comparison of incore detector measurements to NIS axial flux difference from a surveillance requirement for NIS to a surveillance requirement for OTΔT. This is an administrative change, because the surveillance verifies the f(ΔI) input to the OTΔT function.	Table 3.3.1-1 Function 5	Table 15.4.1-1 Item 1.c
3.3.1 A16	Reorganizes CTS surveillance requirements for the Nuclear Intermediate Range instrumentation, and deletes the statement that associated surveillances are required when the function is not blocked. This change is administrative, because the ITS usage rules require surveillances to be met during the MODES specified in the Applicability for individual LCOs.	Table 3.3.1-1 Function 3 SR 3.0.1 SR 3.3.1.1 SR 3.3.1.8 SR 3.3.1.11	Table 15.4.1-1 Items 2.a and2.b

Table A – Administrative Changes
ITS Section 3.3 – Instrumentation

DOC No.	Description of Change	ITS Requirement	CTS Requirement
3.3.1 A17	Reorganizes CTS surveillance requirements for the Nuclear Source Range instrumentation, and deletes the statement that associated surveillances are required when the function is not blocked. This change is administrative, because the ITS usage rules require surveillances to be met during the MODES specified in the Applicability for individual LCOs.	Table 3.3.1-1 Function 4.a, SR 3.0.1, SR 3.3.1.1, SR 3.3.1.7 SR 3.3.1.8 SR 3.3.1.11	Table 15.4.1-1 Items 3, 3.a, and 3.b
3.3.1 A18	Deletes CTS Note from several RPS functions allowing testing of low power trip bistable setpoints which cannot be done during power operations to be conducted prior to reactor criticality, if not done in the previous surveillance interval. This change is administrative, because the Note has no bearing on the performance of any test associated with the functions from which it is being deleted.	SR 3.3.1.7 for Table 3.3.1-1 Functions 5, 6, 7.a, 7.b, 8, 9.a, and 9.b SR 3.3.1.9 for Table 3.3.1-1 Function 11	Table 15.4.1-1 Note (2) for Items 4.a, 5.a, 6, 7, and 11.b
3.3.1 A19	Reorganizes CTS surveillance requirements for Reactor Coolant Flow instrumentation into separate requirements for the Single Loop function and the Two Loop function to accommodate the implementation of the STS definition of MODES, because these two functions are required under different plant conditions.	Table 3.3.1-1 Functions 9.a and 9.b SR 3.3.1.1 SR3.3.1.7 SR 3.3.1.11	Table 15.4.1-1 Items 5.aand 5.b
3.3.1 A20	Deletes CTS Note that relaxes requirements for surveillances during periods of cold and refueling shutdown until prior to taking unit critical, if not performed during the previous surveillance period. This change is administrative, because ITS usage rules require surveillances to be met during the MODES in the applicability for an individual LCO, and do not allow entry into a MODE in the applicability of an LCO unless the LCO's surveillances have been met within their specified frequency.	SR 3.0.1 SR 3.0.4 SR 3.3.1.1 Table 3.3.1-1 Function 14	Table 15.4.1-1 Note (22) for Item 9
3.3.1 A21	Implements the STS definition of MODES to the Reactor Protection System Actuation System Logic, consistent with the CTS requirements.	Table 3.3.1-1 Functions 21.a, and 21.b	Table 15.4.1-1 Item 44
3.3.1 A22	Implements the STS definition of MODES to the Reactor Trip System Interlocks, consistent with the CTS requirements.	Table 3.3.1-1 Functions 17.a, 17.b.(2), 17.c, 17.d, and 17.e	Table 15.4.1-1 Items 45.a, 45.b, 45.c, 45.d, and 45.e

Table A – Administrative Changes
ITS Section 3.3 – Instrumentation

DOC No.	Description of Change	ITS Requirement	CTS Requirement
3.3.1 A23	Deletes CTS Note excluding neutron detectors from the Channel Calibration of the 1st Stage Turbine Impulse Pressure Interlock. This change is administrative, because there are no neutron detectors associated with this interlock.	N/A	Table 15.4.1-1 Note (24) for Item 45.e
3.3.1 A24	Deletes Notations for Plant Conditions in CTS Table 15.4.1-1. This change is administrative, because the applicability requirements are provided in ITS using the STS definition of MODES, and the CTS terms are no longer necessary.	3.3.1 Applicability Table 1.1-1 Table 3.3.1-1 Applicable Modes column	Table 15.4.1-1 plant conditions of ALL, COLD S/D, HOT S/D, PWR - POWER OPER, and REF S/D
3.3.1 A25	Deletes CTS Note for reactor trip breaker undervoltage and shunt trip mechanisms TADOT that relaxes requirements for this surveillance during periods of cold and refueling shutdown until prior to exceeding 200 °F, if not performed during the previous surveillance period. This change is administrative, because ITS usage rules require surveillances to be met during the MODES in the applicability for an individual LCO, and do not allow entry into a MODE in the applicability of an LCO unless the LCO's surveillances have been met within their specified frequency.	Table 3.3.1-1 Function 19 SR 3.3.1.4 SR 3.0.1 SR 3.0.4	Table 15.4.1-2 Note (9) for Item 24.a
3.3.1 A26	Deletes CTS requirement to verify the Reactor Trip Bypass Breaker shunt trip function. This change is administrative, because there is no automatic shunt trip associated with the Reactor Trip Bypass Breaker.	N/A	Table 15.4.1-2 Item 25.b
3.3.1 A27	Not used.	N/A	N/A
3.3.1 A28	Not used.	N/A	N/A
3.3.1 A29	Adds Note to CTS which excludes the neutron detectors from the Channel Calibration surveillance requirements for the Power Range Neutron Flux - High, Power Range Neutron Flux - Low, Intermediate Range Neutron Flux and Source Range Neutron Flux trip instrumentation. This is an administrative change, because Point Beach currently interprets the Channel Calibration requirement on the nuclear instruments to not include the neutron detectors.	SR 3.3.1.11 Note Table 3.3.1-1 Functions 2.a, 2.b, 3, and 4	Table 15.4.1-1 Items 1, 2, and 3.b
3.3.1 A30	Deletes CTS requirement for at least 1 cps, attributable to neutrons, to register on a narrow range source range nuclear instrument during an approach to criticality. This is an administrative change because the CTS requirement is redundant to the ITS Channel Check and COT which are required to be current before entering MODE 2.	SR 3.0.1, SR 3.0.4 SR 3.3.1.1 SR 3.3.1.8 Table 3.3.1-1 Function 4	15.3.1.F.3
3.3.1 A31	Changes CTS requirement for the "at power" reactor trips to be unblocked when Power Range nuclear flux greater than or equal to 9% (+/- 1%) of rated power, to a P-7 setpoint of Power Range Neutron Flux is < 10% RTP in ITS. This is an administrative change, because the most limiting value of the CTS expression is greater than or equal to 10% rated power.	Table 3.3.1-1 Note (e) for Applicable modes of Functions 7.a, 8, and 17.b.(1), and Note (g) for Function 9.b	15.2.3.2.A.(1) Table 15.3.5-2 Items 7, 9, and 10.b Table 15.4.1-1 Item 5.b, and 6

Table A – Administrative Changes
ITS Section 3.3 – Instrumentation

DOC No.	Description of Change	ITS Requirement	CTS Requirement
3.3.1 A32	Adopts STS Note allowing separate Condition entry for each RPS Function. This change is administrative. The adoption of STS Specification 1.3, restricts Condition entry. CTS does not restrict Condition entry. Therefore, it is necessary to adopt the STS Note to retain the CTS allowance regarding Condition entry.	3.3.1 ACTIONS Note	15.3.5

DOC No.	Description of Change	ITS Requirement	CTS Requirement
3.3.2 A1	Editorial changes, reformatting, and revised numbering of Engineered Safety Features Actuation System (ESFAS) instrumentation requirements. ITS – CTS ESFAS Function correspondence follows:	3.3.2, 3.3.2 Required Action A.1, 3.3.2 Required Action D.1, SR 3.3.2.1, SR 3.3.2.2, SR 3.3.2.2 Note, SR 3.3.2.3, SR 3.3.2.6, SR 3.3.2.8, Table 3.3.2-1 Functions 1.c, 1.d, 1.e, 2.c, 4.c, 4.d-1, 4.d-3, 4.e-1, 6.b	15.3.5.A, 15.3.5.B, Table 15.3.5-1 Items 1, 2, 3, 4, 5, 6, 7, Table 15.3.5-3 Items 1.b Note**, 1.c Note**, 1.d Note**, 2.b Note**, 3.a.i Note**, 3.b.ii Note**, Table 15.3.5-4 Items 2.b.(2) Note**, 2.c Note**, 3.a Note**, Table 15.4.1-1 Items 7, 8, 8 Note (17), 10, 11.a, 27, 27 Note (3), 44, 44 Note (23)

ITS ESFAS Function Title / ITS/CTS Table:	ITS 3.3.2-1	CTS 15.3.5-1	CTS 15.3.5-3	CTS 15.3.5-4	CTS 15.4.1-1
Safety Injection (SI)	**1**	—	**1**	—	—
Manual Initiation	1.a	—	1.a	—	—
Automatic Actuation Logic and Actuation Relays	1.b	—	—	—	44
Containment Pressure – High	1.c	1	1.b	—	27
Pressurizer Pressure – Low	1.d	3	1.d	—	7
Steam Line Pressure – Low	1.e	4	1.c	—	10
Containment Spray	**2**	—	**2**	—	—
Manual Initiation	2.a	—	2.a	—	—
Automatic Actuation Logic and Actuation Relays	2.b	—	—	—	44
Containment Pressure – High High	2.c	2.a	2.b	—	—
Containment Isolation	**3**	—	—	**1**	—
Manual Initiation	3.a	—	—	1.b	—
Automatic Actuation Logic and Actuation Relays	3.b	—	—	—	44
Safety Injection	3.c	—	—	1.a	—
Steam Line Isolation	**4**	—	—	**2**	—
Manual Initiation	4.a	—	—	2.d	—
Automatic Actuation Logic and Actuation Relays	4.b	—	—	—	44
Containment Pressure – High High	4.c	2.b	—	2.c	—
High Steam Flow Coincident with SI and Tavg – Low	4.d	5	—	2.b	—
High High Steam Flow Coincident with SI	4.e	6	—	2.a	—
Feedwater Isolation	**5**	—	—	**3**	—
Automatic Actuation Logic and Actuation Relays	5.a	—	—	—	44
Steam Generator Water Level – High	5.b	—	—	3.a	8
Safety Injection	5.c	—	—	3.b	17
Auxiliary Feedwater	**6**	—	**3**	—	—
Automatic Actuation Logic and Actuation Relays	6.a	—	—	—	44
Steam Generator Water Level – Low Low	6.b	7	3.a.i, 3.b.ii	—	8
Safety Injection	6.c	—	3.a.ii	—	—
Undervoltage Bus A01 and A02	6.d	8	3.b.i	—	11.a
Condensate Isolation	**7**	—	—	—	—
Containment Pressure – High	7.a	—	—	—	—
Automatic Actuation Logic and Actuation Relays	7.b	—	—	—	—
SI Block – Pressurizer Pressure	**8**	—	—	—	—

Table A – Administrative Changes
ITS Section 3.3 – Instrumentation

DOC No.	Description of Change	ITS Requirement	CTS Requirement
3.3.2 A2	The Bases have been completely replaced by revised Bases that reflect the format and applicable content of NUREG-1431.	Bases	Bases
3.3.2 A3	Deletes CTS Note that provides post modification values for the Unit 1 Low-Low Steam Generator Water Level based on change out of the narrow range lower tap to the lower position. This change is administrative as the Unit 1 narrow range lower tap has been modified to the lower position.	N/A	Table 15.3.5-1 Item 7 Note**
3.3.2 A4	Changes CTS instrumentation Table column heading from "Minimum Operable Channels" to "Required Channels."	3.3.2, Table 3.3.2-1, Table 3.3.2-1 Functions 1.c, 1.d, 1.e, 2.c, 4.c, 5.b, 6.b	15.3.5.C, Table 15.3.5-3, Table 15.3.5-3 Items 1.b, 1.c, 1.d, 2.b, 3.a.i, 3.b.ii, Table 15.3.5-4 Items 2.c, 3.a
3.3.2 A5	Changes CTS instrumentation Table column heading from "Permissible Bypass Conditions" to "Applicable Modes."	Table 3.3.2-1,	Table 15.3.5-3, Table 15.3.5-4 Table 15.4.1-1
3.3.2 A6	Not used.	N/A	N/A
3.3.2 A7	Replaces CTS action requirements for inoperable channels of the following instrumentation functions with a reference to the requirements for the Safety Injection function: Safety Injection actuation of the AFW, Containment Isolation, Steam Line Isolation coincident with Hi Hi Steam Flow, Steam Line Isolation coincident with Hi Steam Flow and Low T_{avg}, and Feedwater Isolation. This is an administrative change because these actuation functions are a direct output of the Safety Injection logic and have no separate logic system. The ITS specifies action requirements for these actuation functions under the requirements for the Safety Injection function.	Table 3.3.2-1 Function 1 Actions Functions 3.c, 4.d, 4.e, 5.c, and 6.c	Table 15.3.5-3 Item 3.a.ii, Table 15.3.5-4 Items #1.a, 2.a.(2), 2.b.(3), 3.b

Table A – Administrative Changes
ITS Section 3.3 – Instrumentation

DOC No.	Description of Change	ITS Requirement	CTS Requirement
3.3.2 A8	Deletes CTS Note that relaxes requirements for surveillances during periods of cold and refueling shutdown until prior to taking unit critical, if not performed during the previous surveillance period. This change is administrative because ITS usage rules require surveillances to be met during the MODES in the applicability for an individual LCO, and do not allow entry into a MODE in the applicability of an LCO unless the LCO's associated surveillances have been met within their specified frequency.	SR 3.0.1, SR 3.0.4	Table 15.4.1-1 Note (1) for Items 7, 8, 10, 11, 27, and 44
3.3.2 A9	Removes CTS requirement to perform a separate test of MFP Trip and MFRV isolation on SI. This is an administrative change, because these functions are a direct output of the SI logic. The surveillance requirements performed on the SI logic verify that the outputs to these functions are OPERABLE. Therefore, no additional testing is required to ensure their OPERABILITY.	Table 3.3.2-1 Function 5.c	Table 15.4.1-1 Items 17.a and 17.b
3.3.2 A10	Implements the STS definition of MODES to the ESFAS logic, consistent with the safety analysis assumptions for each function.	SR 3.3.2.2, Table 3.3.2-1 Functions 1.b, 2.b, 3.b, 4.b, 5.a, 6.a, and 7.b	Table 15.4.1-1 Item 44
3.3.2 A11	Deletes CTS Table 15.4.1-1, Notations for Plant Conditions. This change is administrative, because the Applicability requirements are provided in ITS using the STS definition of MODES, and the CTS terms are no longer necessary.	Section 1.1 Definition of MODES; Table 1.1-1	Table 15.4.1-1 plant condition notations of ALL, COLD S/D, HOT S/D, PWR – POWER OPER, REF S/D
3.3.2 A12	Adopts STS Note allowing separate Condition entry for each ESFAS Function. This change is administrative. The adoption of STS Specification 1.3, restricts Condition entry. CTS does not restrict Condition entry. Therefore, it is necessary to adopt the STS Note to retain the CTS allowance regarding separate Condition entry.	3.3.2 ACTIONS Note	15.3.5

DOC No.	Description of Change	ITS Requirement	CTS Requirement
3.3.3 A1	Editorial changes, reformatting, and revised numbering of Post Accident Monitoring (PAM) System instrumentation requirements. ITS – CTS PAM Function correspondence follows: ITS PAM Function Title / ITS/CTS Table: — ITS 3.3.3-1 / CTS 15.3.5-5 / CTS 15.4.1-1 Reactor Coolant System (RCS) Subcooling Monitor — 1 / 4 / 41 RCS Hot Leg Temperature (Wide Range) — 2 / 18 / — RCS Cold Leg Temperature (Wide Range) — 3 / 19 / — RCS Pressure (Wide Range) — 4 / 16 / — RCS Pressure (Narrow Range) — 5 / 17 / — Reactor Vessel Water Level (Wide Range) — 6 / 11 / 37 Reactor Vessel Water Level (Narrow Range) — 7 / 12 / 37 Containment Sump B Water Level — 8 / 9 / 28 Containment Pressure (Wide Range) — 9 / 21 / 27 Containment Pressure (Intermediate range) — 10 / 22 / 27 Containment Pressure (Low Range) — 11 / 23 / 27 Containment Isolation Valve Position — 12 / 28 / — Containment Area Radiation (High Range) — 13 / 7 / 25 Hydrogen Monitors — 14 / 10 / 26.a, 26.b Pressurizer Level — 15 / 20 / 6 SG Water Level (Wide Range) — 16 / 25 / — SG Water Level (Narrow Range) — 17 / 26 / 8 SG Pressure — 18 / 27 / 10 Condensate Storage Tank Level — 19 / 24 / 24 Core Exit Temperature – Quadrant 1 — 20 / 13 / 31 Core Exit Temperature – Quadrant 2 — 21 / 13 / 31 Core Exit Temperature – Quadrant 3 — 22 / 13 / 31 Core Exit Temperature – Quadrant 4 — 23 / 13 / 31 Auxiliary Feedwater Flow — 24 / 6 / 20 Refueling Water Storage Tank Level — 25 / 15 / 38	3.3.3 Table 3.3.3-1 Functions 1 through 25 (Following goes in next column, but is put here for the draft version of the table.) Table 15.3.5-5 Items 4, 7, 9, 10, 11, 12, 13, 15, 16, 17, 18, 19, 20, 21, 22, 23, 24, 25, 26, 27, and 28 Table 15.4.1-1 Items 6, 8, 10, 20, 24, 25, 26.a, 26.b, 27, 28, 31, 37, 38, and 41	
3.3.3 A2	Deletes CTS Note stating the requirements of the table only refer to the portions of the channels required for PAM instrumentation and also references the FSAR for applicable channels. This change is administrative, because references to the FSAR in this manner do not establish a regulatory requirement.	N/A	Table 15.3.5-5 Note

Table A – Administrative Changes
ITS Section 3.3 – Instrumentation

DOC No.	Description of Change	ITS Requirement	CTS Requirement
3.3.3 A3	Clarifies CTS requirements for Containment Isolation Valve Position Indication by adopting STS requirement for two channels per penetration flowpath. This change is administrative, because this requirement is modified by Notes that make the ITS requirement equivalent to the CTS requirement.	Table 3.3.3-1 Function 12 and NOTES (a) and (b)	Table 15.3.5-5 Item 28
3.3.3 A4	Deletes CTS Note that relaxes requirements for surveillances during periods of cold and refueling shutdown until prior to taking unit critical, if not performed during the previous surveillance period. This change is administrative, because ITS usage rules require surveillances to be met during the MODES in the applicability for an individual LCO, and do not allow entry into a MODE in the applicability of an LCO unless the LCO's surveillances have been met within their specified frequency.	SR 3.0.1, SR 3.0.4	Table 15.4.1-1 Note (1) for Items 6, 8, 24, and 25
3.3.3 A5	Implements the STS definition of MODES to the Post Accident Monitoring Instruments, consistent with the CTS requirements.	3.3.3 Applicability Section 1.1 definition of MODES Table 1.1-1	Table 15.3.5-5 Items 4, 7, 9, 10, 11, 12, 13, 15, 16, 17, 18, 19, 20, 21, 22, 23, 24, 25, 26, 27, and 28 Table 15.4.1-1 Items 6, 8, 10, 20, 24, 25, 26.a, 26.b, 27, 28, 31, 37, 38, and 41
3.3.3 A6	Adopts STS Note allowing separate Condition entry for each PAM instrument. This change is administrative. The adoption of STS Specification 1.3, restricts Condition entry. CTS does not restrict Condition entry. Therefore, it is necessary to adopt the STS Note to retain the CTS allowance regarding Condition entry.	3.3.3 ACTIONS Note 1	15.3.5.D, Table 15.3.5-5 Items 4, 7, 9, 10, 11, 12, 13, 15, 16, 17, 18, 19, 20, 21, 22, 23, 24, 25, 26, 27, and 28
3.3.3 A7	Deletes CTS Note that stipulates the Calibration of the In-Core Thermocouples is to be a verification of response to a source. This change is administrative, because the ITS definition of CHANNEL CALIBRATION contains this requirement.	SR 3.3.3.3 for Table 3.3.3-1 Functions 20 - 23, Section 1.1 CHANNEL CALIBRATION definition	Table 15.4.1-1 Item 31 Note (14)
3.3.4 NONE	NONE	NONE	NONE

Table A – Administrative Changes
ITS Section 3.3 – Instrumentation

DOC No.	Description of Change	ITS Requirement	CTS Requirement
3.3.5 A1	Editorial changes, reformatting, and revised numbering of CTS requirements for loss of power diesel generator start and load sequence instrumentation.	LCO 3.3.4 3.3.4 ACTIONS A and C 3.3.4 ACTIONS NOTE SR 3.3.4.1, SR 3.3.4.2, SR 3.3.4.3	Table 15.3.5-1 Items 9, 10.a, and 10.b Table 15.3.5-3 Items 4.a.i and Note ** and Note ***, 4.a.ii and Note ** and Note *** 4.b.i and Note ** Table 15.4.1-1 Items 13.a, 13.b, and 13.c
3.3.5 A2	Changes CTS instrumentation Table column heading from "Minimum Operable Channels" to "Required Channels."	LCO 3.3.4.a, LCO 3.3.4.b, and LCO 3.3.4.c	Table 15.3.5-3 Items 4.a.i, 4.a.ii, and 4.b.i
3.3.5 A3	Changes CTS instrumentation Table column heading from "Permissible Bypass Conditions" to "APPLICABILITY".	3.3.4 Applicability, LCO 3.3.4.a, LCO 3.3.4.b, LCO 3.3.4.c	Table 15.3.5-3, Items 4.a.i, 4.a.ii, and 4.b.i
3.3.5 A4	Not used.	N/A	N/A
3.3.5 A5	Deletes CTS Note that specifies use of the 3/bus specification for each A05 and A06 bus that has been modified to the 2 out of 3 logic for the loss of voltage protection function. This change is administrative, because all A05 and A06 buses have been modified to the 2 out of 3 logic configuration for the loss of voltage protection function.	N/A	Table 15.3.5-3 Note **** to Item 4.a.ii
3.3.6 NONE	NONE	NONE	NONE
3.3.7 A1	Editorial changes, reformatting, and revised numbering for CTS requirements for the control room emergency filtration system (CREFS) actuation instrumentation.	3.3.5 SR Table Note, SR 3.3.5.2, SR 3.3.5.3	Table 15.4.1-1 Items 36.e and 36.f
3.3.8 NONE	NONE	NONE	NONE
3.3.9 A1	Editorial changes, reformatting, and revised numbering for CTS requirements for the boron dilution alarm instrumentation.	SR 3.3.6.1	Table 15.4.1-2 Item 32

Table L – Less Restrictive Changes
ITS Section 3.3 – Instrumentation

DOC No.		Description of Change	ITS Requirement	CTS Requirement	Change Type
3.3.1	L1	Not used.	N/A	N/A	N/A
3.3.1	L2	Not used.	N/A	N/A	N/A
3.3.1	L3	Adds a Note to CTS that allows one train of SI to be bypassed for up to 8 hours for surveillance testing, provided the other train is OPERABLE.	Table 3.3.1-1 Function 16 3.3.1 ACTION P Note	Table 15.3.5-2 Item 15	1
3.3.1	L4	Deletes CTS Note that requires the unit to be placed in cold shutdown, if the minimum Conditions for SI input to the Reactor Trip System are not met within 24 hours after reaching hot shutdown.	Table 3.3.1-1 Function 16 3.3.1 ACTION P	Table 15.3.5-2 Note *** for Item 15	4
3.3.1	L5	Extends CTS completion time to place the unit in hot shutdown for an inoperable train of Safety Injection input from ESFAS.	Table 3.3.1-1 Function 16 3.3.1 ACTION P	Table 15.3.5-2 Item 15	6
3.3.1	L6	Extends CTS allowance to delay performance of the Daily Heat Balance of the Nuclear Power Range instrumentation until conditions necessary to perform the SR are established.	SR 3.3.1.2 Note 2 Table 3.3.1-1 Function 2.a	Table 15.4.1-1 Item 1.a	3
3.3.1	L7	Relaxes Frequency of SR to compare results of incore detector measurements to NIS axial flux difference from monthly to 31 effective full power days (EFPD).	SR 3.3.1.3 Table 3.3.1-1 Function 5	Table 15.4.1-1 Item 1.c	3
3.3.1	L8	Not used.	N/A	N/A	N/A
3.3.1	L9	Relaxes CTS requirement to perform a COT on the Source and Intermediate Range Monitors from "Prior to reactor criticality, if not performed during the previous week," to "Prior to reactor startup, when not performed within previous 92 days."	SR 3.3.1.8 Table 3.3.1-1 Functions 2.b, 3, and 4	Table 15.4.1-1 Items 2.b and 3.b	3
3.3.1	L10	Relaxes CTS Applicability for Reactor Coolant Temperature (OPΔT and OTΔT) by excluding MODES 3, 4, 5 and 6.	Table 3.3.1-1 Functions 5 and 6	Table 15.4.1-1 Item 4	2

CHANGE TYPES

1. Relaxation of LCO Requirement
2. Relaxation of Applicability
3. Relaxation of Surveillance Requirement
4. Relaxation of Required Action
5. Relaxation of CTS Reporting Requirements
6. Relaxation of Completion Time
7. Deletion of Requirements Redundant to Regulations

Table L – Less Restrictive Changes
ITS Section 3.3 – Instrumentation

DOC No.	Description of Change	ITS Requirement	CTS Requirement	Change Type
3.3.1 L11	Relaxes CTS requirement by allowing a delay in the performance of the ACTUATION LOGIC TEST on the Source Range Neutron Flux Trip Function. Also relaxes CTS requirement by allowing an exception to the performance of the monthly ACTUATION LOGIC TEST for the RCP Breaker Position (Two Loops), Reactor Coolant Flow – Low (Two Loops) and Underfrequency Bus A01 and A02 Trip Functions and the P-6, P-7, P-8, P-9 and P-10 Interlocks.	SR 3.3.1.15, SR 3.3.1.5 Note 1, SR 3.3.1.5 Note 2 Table 3.3.1-1 Function 21	Table 15.4.1-1 Items 5, 12, 44, and 45	3
3.3.1 L12	Not used.	N/A	N/A	N/A
3.3.1 L13	Relaxes CTS frequency for the CHANNEL CHECK surveillances from "each shift" (every 8 hours) to "every 12 hours."	SR 3.3.1.1 Table 3.3.1-1 Functions 2.a, 2.b, 3, 4, 5, 6, 7.a, 7.b, 8, 9.a, 9.b, 13, and 14	Table 15.4.1-1 Items 1.a, 2.a, 3.b, 4, 6, 7, 8, and 9	3
3.3.1 L14	Relaxes the CTS Applicability for the Undervoltage Bus A01 and A02 and Underfrequency Bus A01 and A02 Functions to MODE 1 above the P-7 interlock. Also revises the default required actions consistent with when the trip functions are required to be operable.	3.3.1 Required Actions E.2 and K.2 Table 3.3.1-1 Functions 11 and 12	Table 15.3.5-2 Items 14.a and 14.b Table 15.4.1-1 Item 11.b and 12	2
3.3.1 L15	Relaxes CTS surveillance frequency for Turbine Trip Function from "prior to reactor criticality, if not performed during the previous month," to "prior to exceeding the P-9 interlock whenever the unit has been in MODE 3, if not performed within previous 31 days."	SR 3.3.1.14, Table 3.3.1-1 Functions 15.a and 15.b	Table 15.4.1-1 Item 15	3
3.3.1 L16	Relaxes CTS surveillance frequency for Reactor Trip Breakers from monthly to every 31 days on a staggered test basis.	SR 3.3.1.4	Table 15.4.1-1 Item 24	3
3.3.1 L17	Relaxes CTS Actuation Logic Test surveillance frequency for Table 15.4.1-1, functions 15.a, 15.b and 16 from monthly to every 31 days on a staggered test basis.	Table 3.3.1-1 Functions 15.a, 15.b, and 16 SR 3.3.1.5	Table 15.4.1-1 Items 15.a, 15.b, and 16	3

CHANGE TYPES

1. Relaxation of LCO Requirement
2. Relaxation of Applicability
3. Relaxation of Surveillance Requirement
4. Relaxation of Required Action
5. Relaxation of CTS Reporting Requirements
6. Relaxation of Completion Time
7. Deletion of Requirements Redundant to Regulations

Table L – Less Restrictive Changes
ITS Section 3.3 – Instrumentation

DOC No.	Description of Change	ITS Requirement	CTS Requirement	Change Type
3.3.1 L18	Deletes CTS setpoint for the low voltage trip of a RCP motor breaker, because Point Beach accident analysis does not credit the indirect trip of the RCP breakers on low voltage for the mitigation of a loss of flow event. ITS does retain the Undervoltage Bus A01 & A02 function.	Table 3.3.1-1 Function 11	15.2.3.1.B.(8).(b) 15.2.3.1.B.(6)	1
3.3.1 L19	Deletes CTS Note which provides a description of a heat balance in relation to NIS.	Table 3.3.1-1 function 2.a SR 3.3.1.2	Table 15.4.1-1 Note (19) for Item 1.a	3
3.3.2 L1	Not used.	N/A	N/A	N/A
3.3.2 L2	Not used.	N/A	N/A	N/A
3.3.2 L3	Relaxes CTS Applicability by allowing RCS hydrostatic testing in MODE 3 without the Steam Line Pressure - Low Safety Injection Function OPERABLE.	Table 3.3.2-1 Note (b), Table 3.3.2-1 Function 1.e	Table 15.3.5-3 Item 1.c, Table 15.4.1-1 Item 10	2
3.3.2 L4	Relaxes CTS frequency for the CHANNEL CHECK surveillance from "each shift" to "every 12 hours."	SR 3.3.2.1	Table 15.4.1-1 Items 7, 8, 10, and 27	3
3.3.2 L5	Relaxes CTS action requirements for an inoperable train of ESFAS Actuation logic by extending the time allowed to restore the inoperable train from 1 hour to 6 hours.	3.3.2 ACTION C, 3.3.2 ACTION G, Table 3.3.2-1 Functions 1.b, 2.b, 3.b, 4.b, 5.a, and 6.a	15.3.0.b for Item 44 of Table 15.4.1-1	6
3.3.2 L6	Deletes CTS Note which excludes the "3.0 psig, -3.0 psig" instrumentation from the Containment Pressure quarterly test requirement.	N/A	Table 15.4.1-1 Item 27 Note (9)	3
3.3.3 L1	Reduces the CTS Applicability for the Post Accident Monitoring Instrumentation from greater than 200 °F to greater than or equal to 350 °F.	3.3.3 Applicability	15.3.5.D	2

CHANGE TYPES

1. Relaxation of LCO Requirement
2. Relaxation of Applicability
3. Relaxation of Surveillance Requirement
4. Relaxation of Required Action
5. Relaxation of CTS Reporting Requirements
6. Relaxation of Completion Time
7. Deletion of Requirements Redundant to Regulations

Table L – Less Restrictive Changes
ITS Section 3.3 – Instrumentation

DOC No.	Description of Change	ITS Requirement	CTS Requirement	Change Type
3.3.3 L2	Deletes CTS Post Accident Monitoring requirements for PORV Position Indicator, PORV Block Valve Position Indicator, Safety Valve Position Indicator, AFW Pump Discharge Flowrate, Containment Sump Level (Sump A), and Main Steam Line Radiation.	N/A	Table 15.3.5-5 Items 1, 2, 3, 5, 8, and 14 Table 15.4.1-1 Items 36.c, 36.d, and 40	1
3.3.3 L3	Extends the CTS completion time to restore one of two inoperable channels of PAM instrumentation from 48 hours to 7 days.	3.3.3 Required Action C.1 for Table 3.3.3-1 Functions 1, 2, 3, 4, 5, 6, 7, 8, 9, 10, 11, 15, 16, 18, 19, 20, 21, 22, 23, 24, and 25	Table 15.3.5-5 Items 4, 6, 9, 11, 12, 13, 15, 16, 17, 18, 19, 20, 21, 22, 23, 24, 25, 26, and 27	6
3.3.3 L4	Not used.	N/A	N/A	N/A
3.3.3 L5	Relaxes CTS action requirements for an inoperable channel of Containment High Range Radiation instrumentation, by allowing 30 days to restore the inoperable channel to an operable status.	Table 3.3.3-1 Function 13 3.3.3 ACTIONS A and B	Table 15.3.5-5 Item 7	4
3.3.3 L6	Relaxes CTS action requirements when an inoperable channel of Containment Hydrogen Concentration instrumentation cannot be restored in 30 days, by requiring the submittal of a report instead of requiring the unit be placed in hot shutdown.	Table 3.3.3-1 Function 14 3.3.3 ACTIONS A and B	Table 15.3.5-5 Item 10 Note*	4
3.3.3 L7	Relaxes CTS action requirements for an inoperable containment isolation valve shut position indication by allowing 30 days to restore the inoperable channel to OPERABLE status (instead of 7 days) and requiring the submittal of a report (in lieu of the shutdown requirement).	Table 3.3.3-1 Function 12 3.3.3 ACTIONS A and B	Table 15.3.5-5 Item 28	4
3.3.3 L8	Relaxes the CTS frequency for a Channel Check of Pressurizer Water Level, SG Water Level, SG Pressure, CST Level, Containment Hydrogen Monitor, and Containment Pressure from Shiftly or Daily to 31 Days.	SR 3.3.3.1 for Table 3.3.3-1 Functions 9, 10, 11, 14, 15, 16, 17, 18, and 19	Table 15.4.1-1 Items 6, 8, 10, 24, 26.a, 26.b, and 27	3

CHANGE TYPES

1. Relaxation of LCO Requirement
2. Relaxation of Applicability
3. Relaxation of Surveillance Requirement
4. Relaxation of Required Action
5. Relaxation of CTS Reporting Requirements
6. Relaxation of Completion Time
7. Deletion of Requirements Redundant to Regulations

Table L – Less Restrictive Changes
ITS Section 3.3 – Instrumentation

DOC No.	Description of Change	ITS Requirement	CTS Requirement	Change Type
3.3.3 L9	Deletes CTS requirement to perform the Hydrogen Monitor Gas Calibration using 2% and 6% sample gas.	SR 3.3.3.2 for Table 3.3.3-1 Function 14	Table 15.4.1-1 Item 26.a Note (15)	3
3.3.4 NONE	NONE	NONE	NONE	NONE
3.3.5 L1	Not used.	N/A	N/A	N/A
3.3.5 L2	Not used.	N/A	N/A	N/A
3.3.5 L3	Extends the time required to enter the applicable condition(s) and required action(s) for the associated DG made inoperable by LOP DG start and load sequence instrumentation by 1 hour.	3.3.4 ACTIONS B and C	Table 15.3.5-3 Note *** for Items 4.a.i and 4.a.ii action requirements	4
3.3.6 NONE	NONE	NONE	NONE	NONE
3.3.7 L1	Relaxes CTS frequency for the CHANNEL CHECK surveillance from "each shift" (every 8 hours) to "every 12 hours."	SR 3.3.5.1	Table 15.4.1-1 Items 36.e and 36.f	3
3.3.8 NONE	NONE	NONE	NONE	NONE
3.3.9 L1	Relaxes the CTS frequency for verifying the operability of the Potential Dilution in Progress Alarm, from "prior to placing the plant in a cold shutdown condition," to "once per 18 months."	SR 3.3.6.1	Table 15.4.1-2 Item 32	3

CHANGE TYPES

1. Relaxation of LCO Requirement
2. Relaxation of Applicability
3. Relaxation of Surveillance Requirement
4. Relaxation of Required Action
5. Relaxation of CTS Reporting Requirements
6. Relaxation of Completion Time
7. Deletion of Requirements Redundant to Regulations

Table M – More Restrictive Changes
ITS Section 3.3 – Instrumentation

DOC No.	Description of Change	ITS Requirement	CTS Requirement
3.3.1 M1	Extends the CTS Applicability for the Manual Reactor Trip Function to include MODES 3, 4 and 5 with the RTBs closed and the Rod Control System capable of rod withdrawal.	Table 3.3.1-1 Functions 1.a and 1.b, and Note (a)	Table 15.3.5-2 Item 1, Table 15.4.1-2 Items 24.b, and 25.c
3.3.1 M2	Imposes additional requirements by adopting the STS Required Actions for inoperable Manual Reactor Trip channel(s).	LCO 3.0.3 3.3.1 ACTIONs B and C Table 3.3.1-1 Function 1	Table 15.3.5-2 Item 1
3.3.1 M3	Adopts the STS requirement to perform a TADOT on the RCP Breaker Position (Single Loop) and RCP Breaker Position (Two Loop) trip functions.	SR 3.3.1.13, Table 3.3.1-1 Functions 10.a and 10.b	15.3.5-2 Items 16.a and 16.b
3.3.1 M4	Not used.	N/A	N/A
3.3.1 M5	Reduces the Completion Time to place the unit in MODE 3 from 8 hours to 6 hours, when an inoperable channel of Nuclear Power Range - Low or Nuclear Power Range - High cannot be placed in the tripped condition within 1 hour.	3.3.1 Required Action D.2 for Table 3.3.1-1 Functions 2.a and 2.b	Table 15.3.5-2 Items 2.a and 2.b
3.3.1 M6	Not used.	N/A	N/A
3.3.1 M7	Not used.	N/A	N/A
3.3.1 M8	Imposes additional restrictions by adopting the STS Required Actions for inoperable Neutron Flux Intermediate Range trip channel(s).	Table 3.3.1-1 Function 3 3.3.1 ACTIONS F and G	15.3.0.c Table 15.3.5-2 Item 3
3.3.1 M9	Extends the CTS Applicability for the Nuclear Flux Source Range to include MODES 3, 4 and 5 with the RTBs closed and the Rod Control System capable of rod withdrawal.	Table 3.3.1-1 Function 4.b and Note (a)	Table 15.3.5-2 Item 4
3.3.1 M10	Imposes additional restrictions by adopting the STS Required Actions for inoperable Neutron Flux Source Range trip channel(s).	3.3.1 ACTIONs H, I, and J for Table 3.3.1-1 Function 4	Table 15.3.5-2 Item 4
3.3.1 M11	Imposes additional restrictions by adopting the STS Required Actions for inoperable OTΔT, OPΔT, Hi Pressurizer Pressure, and Lo Lo SG Water Level trip channel(s).	3.3.1 Required Action D.2 for Table 3.3.1-1 Functions 5, 6, 7.b, and 13	Table 15.3.5-2 Items 5, 6, 8, and 13
3.3.1 M12	Reduces the Completion Time to place the unit in a condition where the requirements for the Low Pressurizer Pressure trip Function no longer apply, when an inoperable channel of this Function cannot be placed in trip in 1 hour.	3.3.1 Required Action K.2 for Table 3.3.1-1 Function 7.a	Table 15.3.5-2 Item 7

Table M – More Restrictive Changes
ITS Section 3.3 – Instrumentation

DOC No.	Description of Change	ITS Requirement	CTS Requirement
3.3.1 M13	Reduces the Completion Time to place the unit in a condition where the requirements for the High Pressurizer Water Level or Low Reactor Coolant Flow – Two Loops trip Function no longer apply, when an inoperable channel of either Function cannot be placed in trip in 1 hour.	3.3.1 ACTION K for Table 3.3.1-1 Function 8	Table 15.3.5-2 Items 10.b and 9
3.3.1 M14	Reduces the Completion Time to place the unit in a condition where the requirements for the Low Reactor Coolant Flow - Single Loop trip Function no longer apply, when an inoperable channel of this Function cannot be placed in trip in 1 hour.	3.3.1 ACTION L for Table 3.3.1-1 Function 9.a	Table 15.3.5-2 Item 10.a, 15.2.3.2.B
3.3.1 M15	Imposes additional restrictions by adopting the STS Required Actions for inoperable Steam Flow/Feedwater Flow Mismatch channel(s).	LCO 3.0.3, 3.3.1 ACTION D for Table 3.3.1-1 Function 14	Table 15.3.5-2 Item 12
3.3.1 M16	Imposes additional restrictions by changing the frequency for verifying the operability of the Reactor Trip Breakers and Reactor Trip Bypass Breakers from "Each refueling shutdown" to "18 months."	SR 3.3.1.13 for, Table 3.3.1-1 Functions 1.a and 1.b	Table 15.4.1-2 Items 24.b and 25.c
3.3.1 M17	Not used.	N/A	N/A
3.3.1 M18	Imposes additional restrictions by adopting the STS Required Actions for an inoperable Underfrequency Bus A01 and A02 trip Function channel.	3.3.1 ACTION E for Table 3.3.1-1 Function 12	Table 15.3.5-2 Item 14.b
3.3.1 M19	Adopts the STS requirement to perform a TADOT on the Turbine Autostop Oil Pressure and Turbine Stop Valve trip Functions.	SR 3.3.1.14 for Table 3.3.1-1 Functions 15.a and 15.b	Table 15.4.1-1 Items 15.a and 15.b
3.3.1 M20	Reduces the Completion Time to place the unit in a condition where the requirements for the RCP Breaker Open Position (>50% full power) trip Function no longer apply, when an inoperable channel of this Function cannot be placed in trip in 1 hour.	3.3.1 ACTION M for Table 3.3.1-1 Function 10.a	Table 15.3.5-2 Item 16.a
3.3.1 M21	Reduces the Completion Time to place the unit in a condition where the requirements for the RCP Breaker Open Position ((10-50% full power) trip Function no longer apply, when an inoperable channel of this Function cannot be placed in trip in 1 hour.	3.3.1 ACTION N for Table 3.3.1-1 Function 10.b	Table 15.3.5-2 Item 16.b
3.3.1 M22	Reduces the Completion Time to place the unit in MODE 3, when an inoperable Reactor Trip Breaker cannot be restored to an operable status in 1 hour. Also adopts the STS Required Actions for an inoperable RTB in MODES 3, 4 and 5 with the RTBs closed and the Rod Control System capable of rod withdrawal have been added.	3.3.1 ACTIONS Q and T for Table 3.3.1-1 Function 18	Table 15.3.5-2 Item 17

Table M – More Restrictive Changes
ITS Section 3.3 – Instrumentation

DOC No.	Description of Change	ITS Requirement	CTS Requirement
3.3.1 M23	Adopts STS requirements and associated Conditions and Required Actions for the Reactor Trip Breaker Undervoltage and Shunt Trip Mechanisms, Reactor Trip System Interlocks, Reactor Trip Bypass Breaker and associated Undervoltage Trip Mechanism, Automatic Trip Logic and SG Water Level – Low trip Functions.	3.3.1 ACTIONS D, P, R, S, T, U, V, W, and X for Table 3.3.1-1 Functions 14, 17, 18, 19, 20 and 21	Table 15.3.5-1 Item 17 Table 15.4.1-1 Items 9, 44.a, and 45 Table 15.4.1-2 Items 24.a, and 25.a
3.3.1 M24	Adds Note modifying Daily Heat Balance of the Nuclear Power Range instrumentation that requires adjustment of the NIS channel, if the absolute difference between the NIS channel output and the calorimetric is greater than 2% RTP.	SR 3.3.1.2 NOTE 1, Table 3.3.1-1 Function 2.a	Table 15.4.1-1 Item 1.a
3.3.1 M25	Adds a Note to the COT surveillance requirement for the Nuclear Instrument System Functions that requires verifying the P-6 and P-10 interlocks are in their required state for existing unit conditions.	SR 3.3.1.8 NOTE, Table 3.3.1-1 Functions 2.b, 3 and 4.a	Table 15.4.1-1 Items 1.b, 2.b, and 3.b
3.3.1 M26	Adopts STS Note modifying the Channel Calibration surveillance requirements for the 4KV Bus Undervoltage A01 & A02 and 4KV Bus Underfrequency A01 & A02 trip Functions, which requires verifying the time delays are adjusted to the prescribed values.	SR 3.3.1.10 NOTE	Table 15.4.1-1 Items 11.b and 12
3.3.1 M27	Adopts STS requirements for COT frequency, imposing the following additional requirements; four hours after reducing power below P-10 for power and intermediate range instrumentation, four hours after reducing power below P-6 for source range instrumentation, every 92 days thereafter.	SR 3.3.1.8 for Table 3.3.1-1 Functions 2.b, 3 and 4.a	Table 15.4.1-1 Items 1.b, 2.b, and 3.b
3.3.1 M28	Adopts STS requirements to perform surveillances on the Nuclear Source Range in MODES 3, 4 and 5 with the RTBs closed and the Rod Control System capable of rod withdrawal.	SR 3.3.1.1, SR 3.3.1.7, SR 3.3.1.11, SR 3.3.1.11 NOTE, Table 3.3.1-1 Function 4.b	Table 15.4.1-1 Item 3
3.3.1 M29	Adopts STS requirement to verify calibration of excore channels in agreement with incore detector measurements.	SR 3.3.1.6 for Table 3.3.1-1 Function 5	Table 15.4.1-1 Item 4.a
3.3.1 M30	Imposes additional restrictions by requiring comparison of results of incore detector measurements to NIS axial flux difference within 24 hours after THERMAL POWER is greater than or equal to 50% RTP.	SR 3.3.1.3 NOTE 2 for Table 3.3.1-1 Function 5	15.4.0.4, Table 15.4.1-1 Item 1.c
3.3.1 M31 ~~open~~	~~Adds field settings for SG Water Level – Low and Turbine Trip – Low Autostop Oil Pressure.~~Not used.	~~Table 3.3.1-1 Functions 14.a (new) and 15.a~~N/A	~~15.4.1-1 Item 15.a~~N/A

Table M – More Restrictive Changes
ITS Section 3.3 – Instrumentation

DOC No.	Description of Change	ITS Requirement	CTS Requirement
3.3.1 M32	Adopts STS requirement to perform a TADOT every 18 months on the Reactor Trip Signal from SI.	SR 3.3.1.13 for Table 3.3.1-1 Function 16	Table 15.4.1-1 Item 16
3.3.1 M33	Requires additional channels to be operable for the following Functions: Manual Reactor Trip, Neutron Flux Intermediate Range, Neutron Flux Source Range, Steam Flow – Feedwater Flow Mismatch, and 4KV Bus Underfrequency.	Table 3.3.1-1 Functions 1.a, 3, 4.a, 12 and 14.b	Table 15.3.5-2 Items 1, 3, 4, 12, and 14.b
3.3.2 M1	Reduces the Completion Time allowed to place the unit in MODE 5, if one or both channels of Manual Containment Spray are inoperable.	3.3.2 ACTION E	Table 15.3.5-3 Item 2.a, and Item 2.a Note*
3.3.2 M2	Reduces the Completion Time to place the unit in MODE 4 from 48 hours to 13 hours, when an inoperable channel of Containment Pressure – High SI, Pressurizer Pressure – Low Safety Injection (SI), Steam Line Pressure – Low SI, Containment Pressure - High High Containment Spray (CS), Containment Pressure – High High Steam Line Isolation (SLI), High Steam Flow SLI, Steam Generator (SG) Water Level – High Feedwater Isolation, or SG Water Level – Low Low Auxiliary Feedwater cannot be placed in the tripped condition within 1 hour.	3.3.2 ACTION D	Table 15.3.5-3 Items 1.b, 1.c, 1.d, 2.b, 3.a.i, and 3.b.ii Table 15.3.5-4 Items 2.b.(2), 2.c, and 3.a
3.3.2 M3	Not used.	N/A	N/A
3.3.2 M4	Imposes additional restrictions by adopting the STS Required Actions for inoperable channel(s) of AFW – Undervoltage Bus A01 and A02.	3.3.2 ACTION H	Table 15.3.5-3 Item 3.b.i
3.3.2 M5	Imposes additional restrictions by adopting the STS Required Actions for inoperable channel(s) of Steam Flow - High High Steam Line Isolation and Steam Flow - High Steam Line Isolation.	3.3.2 ACTION D	Table 15.3.5-4 Items 2.a.(1) and 2.b.(1)
3.3.2 M6	Imposes additional restrictions by adopting the STS Required Actions for inoperable channel(s) of Manual Containment Isolation.	3.3.2 ACTION B	Table 15.3.5-4 Item 1.b
3.3.2 M7	Imposes additional restrictions by adopting the STS Required Actions for inoperable channel of Manual Steam Line Isolation.	3.3.2 ACTION F	Table 15.3.5-4 Item 2.d
3.3.2 M8	Adopts STS requirements to perform MASTER RELAY TEST and SLAVE RELAY TEST surveillance for ALL ESF Actuation logic, except Steam Line Isolation logic, which will only requires a SLAVE RELAY TEST due to logic configuration, and the Auxiliary Feedwater actuation logic which has no master/slave relays.	SR 3.3.2.4 for Table 3.3.2-1 Functions 1.b, 2.b, 3.b, 5.a, and 7.b, SR 3.3.2.5 for Table 3.3.2-1 Function 4.b	Table 15.4.1-1 Item 44
3.3.2 M9	Not used.	N/A	N/A

Table M – More Restrictive Changes
ITS Section 3.3 – Instrumentation

DOC No.	Description of Change	ITS Requirement	CTS Requirement
3.3.2 M10	Imposes additional restrictions by requiring the Condensate Isolation Functions to be OPERABLE in MODES 1, 2, and 3, except when all MFRVs and associated bypass valves are closed and de-activated.	Table 3.3.2-1 Functions 7.a and 7.b	N/A
3.3.2 M11	Adopts STS requirement to verify the time constants associated with the Steam Generator Pressure are adjusted to the prescribed values, as a part of the Channel Calibration surveillance requirement.	SR 3.3.2.8 NOTE for Table 3.3.2-1 Function 1.e	Table 15.4.1-1 Item 10
3.3.2 M12	Adopts the STS requirement to perform a TADOT every 18 months on the following trip Functions: Manual Safety Injection, Manual Containment Spray, Manual Containment Isolation and Manual Steam Line Isolation.	SR 3.3.2.7 for Table 3.3.2-1 Functions 1.a, 2.a, 3.a, and 4.a	N/A
3.3.2 M13	Not used.	N/A	N/A
3.3.2 M14	Adopts STS requirement to perform CHANNEL CHECK, COT and CHANNEL CALIBRATION surveillances for the Pressurizer Pressure SI Block.	SR 3.3.2.1, SR 3.3.2.3, and SR 3.3.2.8 for Table 3.3.2-1 Function 8	N/A
3.3.2 M15	Imposes additional restrictions by adopting the STS requirement for the Pressurizer Pressure SI Block.	3.3.2 ACTION I for Table 3.3.2-1 Function 8	N/A
3.3.2 M16	Adopts STS requirements to perform CHANNEL CHECK, COT and CHANNEL CALIBRATION surveillances on the Steam Flow-High, Steam Flow-High High, and T_{avg}-Low instrumentation that provides signals to the Steam Line Isolation Function.	SR 3.3.2.1, SR 3.3.2.3, and SR 3.3.2.8 for Table 3.3.2-1 Functions 4.c, 4.d, and 4.e	N/A
3.3.2 M17 ~~open~~	~~Adds field setting for High SG Water Level Feedwater Isolation.~~Not used.	~~Table 3.3.2-1 NOTE (f)~~N/A	N/A
3.3.2 M18	Requires additional channels to be operable for the following Functions: Manual Safety Injection, AFW Turbine Driven Pump Start on Undervoltage Bus A01 and A02, Manual Containment Isolation, Hi Hi Steam Flow Steam Line Isolation, and Hi Steam Flow Steam Line Isolation.	Table 3.3.2-1 Functions 1.a, 3.a, 4.d-1, 4.e-1, and 6.d	Table 15.3.5-3 Items 1.a, and 3.b. Table 15.3.5-4 Items 1.b, 2.a.(1), and 2.b.(1)
3.3.2 M19	Imposes additional restrictions by adopting the STS Required Actions for inoperable channel(s) of Manual Safety Injection.	3.3.2 ACTION B for Table 3.3.2-1 Function 1.a	Table 15.3.5-3 Item 1.a, and Note*

Table M – More Restrictive Changes
ITS Section 3.3 – Instrumentation

DOC No.	Description of Change	ITS Requirement	CTS Requirement
3.3.3 M1	Requires additional channels to be operable and adopts the STS Required Actions for one inoperable channel for the following PAM indications: Reactor Coolant System Subcooling, AFW to Steam Generator Flowrate, Containment Sump Level (Sump B), Containment Hydrogen Concentration, Reactor Vessel Wide Range Level, Reactor Vessel Narrow Range Level, In-Core Thermocouples, Refueling Water Storage Tank Level, RCS Wide Range Pressure, RCS Narrow Range Pressure, RCS Wide Range Hot Leg Temperature, RCS Wide Range Hot Leg Temperature, Pressurizer Level, Containment Wide Range Pressure, Containment Intermediate Range Pressure, Containment Low Range Pressure, Condensate Storage Tank Level, SG Wide Range Level, SG Narrow Range Level, and SG Pressure.	3.3.3 ACTIONS A and B, Table 3.3.3-1 Functions 1, 2, 3, 4, 5, 6, 7, 8, 9, 10, 11, 14, 15, 16, 17, 18, 19, 24, and 25	Table 15.3.5-5 Items 4, 6, 9, 10, 11, 12, 13, 15, 16, 17, 18, 19, 20, 21, 22, 23, 24, 25, 26, and 27

DOC No.	Description of Change	ITS Requirement	CTS Requirement
3.3.3 M2	Adopts the STS Required Actions for two inoperable channels of the following PAM indications: Reactor Coolant System Subcooling, AFW to Steam Generator Flowrate, Containment Sump Level (Sump B), Reactor Vessel Wide Range Level, Reactor Vessel Narrow Range Level, In-Core Thermocouples, Refueling Water Storage Tank Level, RCS Wide Range Pressure, RCS Narrow Range Pressure, RCS Wide Range Hot Leg Temperature, RCS Wide Range Cold Leg Temperature, Pressurizer Level, Containment Wide Range Pressure, Containment Intermediate Range Pressure, Containment Low Range Pressure, Condensate Storage Tank Level, SG Wide Range Level, SG Narrow Range Level, and SG Pressure.	3.3.3 ACTIONS C and F for Table 3.3.3-1 Functions 1, 2, 3, 4, 5, 6, 7, 8, 9, 10, 11, 15, 16, 17, 18, 19, 20, 21, 22, 23, 24, and 25	Table 15.3.5-5 Items 4, 6, 9, 11, 12, 13, 15, 16, 17, 18, 19, 20, 21, 22, 23, 24, 25, 26, and 27
3.3.3 M3	Imposes additional restrictions by adopting the STS Required Actions for two inoperable channels of Containment Hydrogen Concentration indication.	3.3.3 ACTION F for Table 3.3.3-1 Function 14	Table 15.3.5-5 Item 10
3.3.3 M4	Imposes additional restrictions by adopting the STS Required Actions for both channels of Containment Isolation Valve Position Indication associated with a penetration flowpath being inoperable.	3.3.3 ACTION F for Table 3.3.3-1 Function 12	Table 15.3.5-5 Item 28
3.3.3 M5	Adopts the STS requirement to perform a CHANNEL CHECK every 31 days on the AFW Flowrate and RWST Level indications.	SR 3.3.3.1 for Table 3.3.3-1 Functions 24 and 25	Table 15.4.1-1 Item 20

Table M – More Restrictive Changes
ITS Section 3.3 – Instrumentation

DOC No.	Description of Change	ITS Requirement	CTS Requirement
3.3.3 M6	Adopts STS requirements to perform a CHANNEL CHECK and CHANNEL CALIBRATION on the following PAM instruments: RCS Wide Range Pressure, RCS Narrow Range Pressure, RCS Wide Range Hot Leg Temperature, RCS Wide Range Cold Leg Temperature, and Steam Generator (Wide Range) Water Level. Also adopts the STS requirements to perform a CHANNEL CHECK and TADOT on the Containment Isolation Valve Position Indication.	SR 3.3.3.1, and SR 3.3.3.3, for Table 3.3.3-1 Functions 2, 3, 4, 5, and 16; SR 3.3.3.1 and SR 3.3.3.4 for Table 3.3.3-1 Function 12	N/A
3.3.4 NONE	NONE	NONE	NONE
3.3.5 M1	Imposes additional restrictions by adopting the STS Required Actions for two inoperable channels of 480 V Buses (B03, B04) - Loss of Voltage.	3.3.4 ACTIONS D and E	Table 15.3.5-3 Note * to Item 4.b.i
3.3.6 NONE	NONE	NONE	NONE
3.3.7 M1	Adopts the STS LCO, Conditions and Required Actions, and Surveillance Requirements addressing the Control Room Emergency Filtration System (CREFS) Actuation Instrumentation.	3.3.5, 3.3.5 ACTIONS NOTE, 3.3.5 ACTIONS A and B Table 3.3.5-1, Functions 1.a, 1.b, and 2	N/A
3.3.8 NONE	NONE	NONE	NONE
3.3.9 M1	Imposes additional restrictions by requiring the Boron Dilution Alarm to be OPERABLE in MODE 5. Additionally, a Required Action has been adopted which requires the closure of unborated water source isolation valve(s) within 1 hour, if the Boron Dilution Alarm is inoperable.	LCO 3.3.6, 3.3.6 ACTION A	N/A

Table R – Relocated Specifications and Removed Details
ITS Section 3.3 – Instrumentation

Doc No.	CTS Requirement	Description of Relocated Requirements	Location	Change Control Process	Change Type
3.3.1 LA1	Table 15.3.5-2	Relocates information contained in CTS Table 15.3.5-2, "Total No. of Channels" column and "No. of Channels to Trip" column.	FSAR	10 CFR 50.59	1
3.3.1 LA2	N/A	Not used.	N/A	N/A	N/A
3.3.1 LA3	Table 15.4.1-1 Item 39	Relocates CTS surveillance requirement for Residual Heat Removal (RHR) Pump Flow indication.	TRM	10 CFR 50.59	4
3.3.1 LA4	Table 15.4.1-1 Note (4) to Item 1.c	Relocates CTS Note specifying the comparison of results of the incore detector measurements to NIS axial flux difference be performed by means of the moveable incore detector system.	Bases	Bases Control Program described in ITS 5.5.13.	4
3.3.1 LA5	15.2.3.1.B.(4) 15.2.3.1.B.(5)	Relocates the CTS specific numerical values for the OPΔT and OTΔT setpoints.	COLR	COLR Program described in ITS Section 5.6.4.	4
3.3.1 R1	Table 15.4.1-1 Note (7) for Items 29, 36.a, and36.b	Relocates the Plant Radiation Monitoring LCOs and associated surveillance requirements.	TRM	10 CFR 50.59	N/A
3.3.2 LA1	Table 15.3.5-3 Table 15.3.5-3 Items 1.a, 1.b, 1.c, 1.d, 2.a, 2.b, 3.a.i, 3.b.i, and 3.b.ii Table 15.3.5-4 Items 1.b, 2.a.(1), 2.b.(1), 2.b.(2), 2.c, 2.d, and 3.a	Relocates information contained in CTS Tables 15.3.5-3 and 15.3.5-4, "Total No. of Channels" column and "No. of Channels to Trip" column.	FSAR	10 CFR 50.59	1

CHANGE TYPES

1. Details of System Design and System Description including Design Limits
2. Description of System or Plant Operation
3. Procedural Details for Meeting TS Requirement, Relocated Reporting Requirements, and Indication-Only Instrumentation Requirements
4. Relocated Redundant Requirements

Table R – Relocated Specifications and Removed Details
ITS Section 3.3 – Instrumentation

Doc No.	CTS Requirement	Description of Relocated Requirements	Location	Change Control Process	Change Type
3.3.2 LA2	Table 15.3.5-3 Item 2.a Note****	Relocates CTS details of design associated with the Containment Spray – Manual Function.	FSAR	10 CFR 50.59	1
3.3.2 LA3	N/A	Not used.	N/A	N/A	N/A
3.3.3 LA1	Table 15.3.5-5 Items 4, 6, 7, 9, 10, 11, 12, 13, 15, 16, 17, 18, 19, 20, 21, 22, 23, 24, 25, 26, 27, and 28	Relocates information contained in CTS Table 15.3.5-5, "Total No. of Channels" column and "No. of Channels to Trip" column.	FSAR	10 CFR 50.59	1
3.3.4 NONE	NONE	NONE	NONE	NONE	NONE
3.3.5 LA1	Table 15.3.5-1	Relocates information contained in CTS Table 15.3.5-1, "Channel" column.	FSAR	10 CFR 50.59	1
3.3.5 LA2	Table 15.3.5-3	Relocates information contained in CTS Table 15.3.5-3, "No. of Channels" column and "No. of Channels to Trip" column.	FSAR	10 CFR 50.59	1
3.3.6 NONE	NONE	NONE	NONE	NONE	NONE
3.3.7 NONE	NONE	NONE	NONE	NONE	NONE
3.3.8 NONE	NONE	NONE	NONE	NONE	NONE
3.3.9 NONE	NONE	NONE	NONE	NONE	NONE

CHANGE TYPES

1. Details of System Design and System Description including Design Limits
2. Description of System or Plant Operation
3. Procedural Details for Meeting TS Requirement, Relocated Reporting Requirements, and Indication-Only Instrumentation Requirements
4. Relocated Redundant Requirements

Table A – Administrative Changes
ITS Section 3.4 – Reactor Coolant System (RCS)

DOC No.	Description of Change	ITS Requirement	CTS Requirement
3.4.1 A1	Editorial changes, reformatting, and revised numbering.	3.4.1, 3.4.1 A, 3.4.1 B, 3.4.1 C	15.3.1.G, 15.3.1.G.1, 15.3.1.G.2, 15.3.1.G.3
3.4.1 A2	The Bases have been completely replaced by revised Bases that reflect the format and applicable content of NUREG-1431.	3.4.1 Bases	Bases
3.4.2 A1	Editorial changes, reformatting, and revised numbering.	3.4.2	15.3.1.F.4
3.4.2 A2	The Bases have been completely replaced by revised Bases that reflect the format and applicable content of NUREG-1431.	3.4.2 Bases	Bases
3.4.3 A1	Editorial changes, reformatting, and revised numbering.	3.4.3	15.3.1.B.1
3.4.3 A2	Revises CTS by referencing the pressure/temperature limit curves contained in the PTLR instead of the pressure/temperature limit curves of the technical specifications. This change is administrative because the pressure/temperature limit curves are being moved to the PTLR and there is no change in the overall operational requirements.	3.4.3	15.3.1.B.1
3.4.3 A3	The Bases have been completely replaced by revised Bases that reflect the format and applicable content of NUREG-1431.	3.4.3 Bases	Bases
3.4.4 A1	Editorial changes, reformatting, and revised numbering.	3.4.4	15.3.1.A.1.a
3.4.4 A2	Revises the required actions of the CTS from placing the unit in hot shutdown, if one or both RCPs are not in operation, to placing the unit in MODE 3, if one or both RCP loops are not operable and in operation. This change is administrative, because although MODE 3 covers a broader range of plant conditions than the CTS definition of hot shutdown, the entry point from plant operation with a critical reactor to each of these defined plant conditions is the same.	3.4.4 ACTION A, 3.4.4 Required Action A.1	15.3.1.A.1.a.(1)
3.4.4 A3	The Bases have been completely replaced by revised Bases that reflect the format and applicable content of NUREG-1431.	3.4.4 Bases	Bases
3.4.5 A1	Editorial changes, reformatting, and revised numbering.	3.4.5 Note	15.3.1.A.1.b.(1).a, 15.3.1.A.1.b.(1).b
3.4.5 A2	Modifies CTS applicability by removing a Note specifying the requirements are only applicable when one or more fuel assemblies are in the reactor vessel. This change is administrative because the definition of MODE specifies, "with fuel in the reactor vessel."	3.4.5 Applicability	15.3.1.A.1 Note *, 15.3.1.A.2 Note *

Table A – Administrative Changes
ITS Section 3.4 – Reactor Coolant System (RCS)

DOC No.	Description of Change	ITS Requirement	CTS Requirement
3.4.6 A1	Editorial changes, reformatting, and revised numbering.	3.4.6, 3.4.6 Note 1, 3.4.6 Note 1.A, 3.4.6 Note 1.B, 3.4.6 Note 2, 3.4.6 Required Action A.1, 3.4.6 ACTION C, 3.4.6 Required Action C.1, 3.4.6 Required Action C.2	15.3.1.A.1, 15.3.1.A.3, 15.3.1.A.3.a, 15.3.1.A.3.a.(1), 15.3.1.A.3.a.(1).a, 15.3.1.A.3.a.(1).b, 15.3.1.A.3.a.(1).c, 15.3.1.A.3.a.(1).d, 15.3.1.A.3.a.(2), 15.3.1.A.3.a.(3), 15.3.1.A.3.a.(4), 15.3.1.A.3.a.(4).(a), 15.3.1.A.3.a.(4).(a).(1), 15.3.1.A.3.a.(4).(a).(2), 15.3.15.B.2, 15.3.15.B.2.b
3.4.6 A2	Modifies CTS applicability by removing a Note specifying the requirements are only applicable when one or more fuel assemblies are in the reactor vessel. This change is administrative because the definition of MODE specifies, "with fuel in the reactor vessel."	3.4.6	15.3.1.A.1 Note *, 15.3.1.A.3 Note *
3.4.6 A3	The CTS requirement for at least one RCP or RHR System to be in operation when the boron concentration of the RCS is being reduced, is being retained in ITS 3.4.6 Note 1 and Condition C.	3.4.6 Note 1 and Condition C.	15.3.1.A.1.c
3.4.6 A4	The CTS requirement to immediately initiate actions to return a second decay heat removal method to operable status when the required decay heat removal methods are not met, is retained in ITS Conditions A and B.	3.4.6 ACTION A	15.3.1.A.3.a.(2)
3.4.6 A5	The CTS requires the suspension of all operations causing an increase in reactor decay heat load, if no decay heat removal method is in operation (RCS temperature is > 140 °F and < 350 °F). This restriction is unnecessary, because refueling operations in CTS are limited to conditions where the RCS temperature is ≤ 140 °F. However, ITS 3.9.4 ACTIONS will require the loading of irradiated fuel assemblies in the core be suspended immediately, when the RHR loop requirements are not met (MODE 6 with the water level ≥ 23 ft above the top of reactor vessel flange.)	N/A	15.3.1.A.3.a.(3)

Table A – Administrative Changes
ITS Section 3.4 – Reactor Coolant System (RCS)

DOC No.	Description of Change	ITS Requirement	CTS Requirement
3.4.7 A1	Editorial changes, reformatting, and revised numbering.	3.4.7 Note 3, 3.4.7 Required Action B.1, 3.4.7 Required Action B.2	15.3.1.A.3.b.(2), 15.3.15.B.2, 15.3.15.B.2.b
3.4.7 A2	Modifies CTS applicability by removing a Note specifying the requirements are only applicable when one or more fuel assemblies are in the reactor vessel. This change is administrative because the definition of MODE specifies, "with fuel in the reactor vessel."	N/A	15.3.1.A.1 Note *
3.4.7 A3	The CTS requirement for at least one RCP or RHR System to be in operation when the boron concentration of the RCS is being reduced, is being retained in ITS 3.4.7 Note 1 and Condition B.	N/A	15.3.1.A.1.c
3.4.7 A4	The CTS requirement to return a decay heat removal method to operation, if no RHR loops are in operation (with RCS temperature < 140 °F) is retained in ITS by the requirement for one RHR loop to be in operation.	3.4.7	15.3.1.A.3.b.(1)
3.4.7 A5	The CTS condition where no RHR loop is in operation, implies that if no RHR loop can be placed in operation, both RHR loops are inoperable. This is consistent with the ITS Condition where no RHR loop is in operation or if no RHR loop is OPERABLE.	3.4.7 ACTION B	15.3.1.A.3.b.(2)
3.4.8 A1	Editorial changes, reformatting, and revised numbering.	3.4.8 Required Action B.1, 3.4.8 Required Action B.2	15.3.1.A.3.b.(2)
3.4.8 A2	Modifies CTS applicability by removing a Note specifying the requirements are only applicable when one or more fuel assemblies are in the reactor vessel. This change is administrative because the definition of MODE specifies, "with fuel in the reactor vessel."	N/A	15.3.1.A.1 Note *
3.4.8 A3	The CTS requirement for at least one RCP or RHR System to be in operation when the boron concentration of the RCS is being reduced, is being retained in ITS 3.4.8 Note 1 and Condition B.	N/A	15.3.1.A.1.c
3.4.8 A4	The CTS requirement to return a decay heat removal method to operation, if no RHR loops are in operation (with RCS temperature < 140 °F) is retained in ITS by the requirement for one RHR loop to be in operation.	3.4.8	15.3.1.A.3.b.(1)
3.4.8 A5	The CTS condition where no RHR loop is in operation, implies that if no RHR loop can be placed in operation, both RHR loops are inoperable. This is consistent with the ITS Condition where no RHR loop is in operation or if no RHR loop is OPERABLE.	3.4.8 ACTION B	15.3.1.A.3.b.(2)
3.4.9 A1	Editorial changes, reformatting, and revised numbering.	3.4.9	15.3.1.A.6

Table A – Administrative Changes
ITS Section 3.4 – Reactor Coolant System (RCS)

DOC No.	Description of Change	ITS Requirement	CTS Requirement
3.4.9 A2	CTS does not provide explicit requirements for non-compliance with the LCO. Adoption of ITS ACTIONS for restoration of the required pressurizer heaters is consistent with the requirements of CTS 15.3.0.B and 15.3.0.C.	3.4.9 ACTION B, 3.4.9 Required Action B.1, 3.4.9 ACTION C, 3.4.9 Required Action C.1, 3.4.9 Required Action C.2	15.3.0.B and 15.3.0.C
3.4.9 A3	The quarterly CTS surveillance requirement will be required to be performed every 92 days in ITS.	SR 3.4.9.2	Table 15.4.1-2 Item 30
3.4.9 A4	The Bases have been completely replaced by revised Bases that reflect the format and applicable content of NUREG-1431.	3.4.9 Bases	Bases
3.4.9 A5	CTS does not provide explicit requirements for non-compliance with the LCO. Adoption of ITS ACTIONS for restoration of the pressurizer water level within 1 hour is consistent with the requirements of CTS 15.3.0.B.	3.4.9 ACTION A, 3.4.9 Required Action A.1	15.3.0.B
3.4.10 A1	Editorial changes, reformatting, and revised numbering.	3.4.10, SR 3.4.10.1	15.3.1.A.4.b, Table 15.4.1-2 Item 11

Table A – Administrative Changes
ITS Section 3.4 – Reactor Coolant System (RCS)

DOC No.	Description of Change	ITS Requirement	CTS Requirement
3.4.11 A1	Editorial changes, reformatting, and revised numbering.	3.4.11, 3.4.11 ACTION A, 3.4.11 Required Action A.1, 3.4.11 ACTION B, 3.4.11 Required Action B.1, 3.4.11 Required Action B.2, 3.4.11 Required Action B.3, 3.4.11 ACTION C, 3.4.11 Required Action C.1, 3.4.11 Required Action C.2, 3.4.11 ACTION D, 3.4.11 ACTION E, 3.4.11 Required Action E.1, 3.4.11 Required Action E.2, 3.4.11 ACTION F, 3.4.11 Required Action F.1, 3.4.11 Required Action F.2, 3.4.11 ACTION G, SR 3.4.11.1, SR 3.4.11.1 Note, SR 3.4.11.2, SR 3.4.11.3	15.3.1.A.3.a.(4), 15.3.1.A.3.a.(5), 15.3.1.A.5, 15.3.1.A.5.a.(1), 15.3.1.A.5.a.(2), 15.3.1.A.5.a.(3), Table 15.4.1-2 Item 21.a, Table 15.4.1-2 Item 21.a Note (13), Table 15.4.1-2 Item 27
3.4.11 A2	Modifies CTS by removing the statement informing the operator to either maintain RCS temperature > 355 °F or apply the requirements of the LTOP LCO. This change is administrative, because the requirements of the LTOP LCO are required to be met when in the condition of applicability, whether stated elsewhere or not.	LCO 3.0.1	15.3.1.A.5
3.4.12 A1	Editorial changes, reformatting, and revised numbering.	SR 3.4.12.4	Table 15.4.1-2 Item 21.b, Table 15.4.1-2 Item 21.b Note (14)
3.4.12 A2	The CTS requirement to maintain PORV block valves open for PORV operability is retained in the ITS as a surveillance requirement, whereby the block valves are required to be verified open at a frequency of 72 hours.	SR 3.4.12.4	15.3.15.A.1.b
3.4.12 A3	Not used.	N/A	N/A

Table A – Administrative Changes
ITS Section 3.4 – Reactor Coolant System (RCS)

DOC No.	Description of Change	ITS Requirement	CTS Requirement
3.4.12 A4	The CTS required actions for an inoperable PORV with RCS temperature ≤ 200 °F has been retained in ITS Condition E, "One required PORV inoperable in MODE 5 or 6." This change is administrative because it does not change any operational restrictions.	3.4.12 ACTION E, Bases	15.3.15.A.2.b, Bases
3.4.12 A5	Not used.	N/A	N/A
3.4.12 A6	The CTS requirements to verify the RCS vent pathway every 31 days when provided by a non-isolable pathway or by a valve(s) that is locked, sealed, or otherwise secured in the open position, and every 12 hours, if provided by other means, is retained in ITS. ITS SR 3.4.12.3 requires verification of the RCS vent at a frequency of 31 days for non-isolable pathways and locked open vent valve(s), and at a frequency of 12 hours for unlocked open vent valve(s). This change is administrative because it does not change any operational restrictions.	SR 3.4.12.3	15.3.15.A.3
3.4.12 A7	The Bases have been completely replaced by revised Bases that reflect the format and applicable content of NUREG-1431.	3.4.12 Bases	Bases
3.4.12 A8	Modifies the CTS from requiring the performance of surveillances in "ALL" plant conditions, to the ITS requirement to perform the surveillances when the associated LCO is applicable. This is an administrative change, because CTS 15.4.0.1 requires surveillance requirements to be met when the system or component is required to be operable. Therefore, this change only clarifies current plant practices consistent with the CTS.	SR 3.4.12.5, SR 3.4.12.6	Table 15.4.1-1 Item 32
3.4.13 A1	Editorial changes, reformatting, and revised numbering.	3.4.13 A, 3.4.13 C, 3.4.13 D, 3.4.13 ACTION A, 3.4.13 ACTION B	15.3.1.D.1, 15.3.1.D.2, 15.3.1.D.4, 15.3.1.D.5
3.4.13 A2	Removes CTS requirement to perform a follow-up evaluation of the safety implications of reactor coolant leakage > 1 gpm within 4 hours. The ITS will require reactor coolant leakage in excess of the limits be reduced to within the limits within 4 hours, thereby providing time to verify the leakage rates and either identify unidentified leakage or reduce leakage to within limits before the unit must be shutdown. This change is administrative because it does not change any operational restrictions.	3.4.13 ACTION A	15.3.1.D.1
3.4.13 A3	Adopts surveillance requirement to verify SG tube integrity is in accordance with the SG Tube Surveillance Program. This change is administrative because it retains current plant practices that are in the CTS.	SR 3.4.13.2	15.4.2.A

Table A – Administrative Changes
ITS Section 3.4 – Reactor Coolant System (RCS)

DOC No.	Description of Change	ITS Requirement	CTS Requirement
3.4.13 A4	CTS requirement to preclude reactor startup until reactor coolant leakage is repaired or otherwise corrected is not retained in ITS. ITS LCO 3.0.4 prevents entry into a MODE in the applicability when an LCO is not met, except when the associated ACTIONS permit continued operation for an unlimited period of time. Therefore this change is administrative because it does not change any operational restrictions.	N/A	15.3.1.D.6
3.4.13 A5	The Bases have been completely replaced by revised Bases that reflect the format and applicable content of NUREG-1431.	3.4.13 Bases	Bases
3.4.14 A1	Editorial changes, reformatting, and revised numbering.	3.4.14, 3.4.14 ACTION A, 3.4.14 ACTION B, SR 3.4.14.1	15.3.16.A, 15.3.16.B, 15.3.16.C, 15.4.16, 15.4.16.A
3.4.14 A2	Modifies CTS by limiting the applicability of the specification to exclude valves in the RHR flow path when in or during transition to or from the RHR mode of operation. This change is administrative because it clarifies current plant practices consistent with the CTS.	3.4.14	15.3.16
3.4.14 A3	The Bases have been completely replaced by revised Bases that reflect the format and applicable content of NUREG-1431.	3.4.14 Bases	Bases
3.4.14 A4	Revises CTS by adopting NUREG-1431 Notes to clarify specific testing involved in the performance of PIV leakage testing. This change is administrative because it does not change any operational restrictions.	SR 3.4.14.1 , SR 3.4.14.1 Note 1, SR 3.4.14.1 Note 2, SR 3.4.14.1 Note 3	15.4.16.A
3.4.14 A5	Modifies CTS by moving PIV leakage rate acceptance criteria and minimum differential test pressure from footnotes in a Table 15.4.16-1 to the Administrative Section. This change is administrative because it does not change any operational restrictions.	5.5.16	Table 15.3.16-1 Note (a), Table 15.3.16-1 Note (b), Table 15.4.16-1 Note (a).1
3.4.15 A1	Editorial changes, reformatting, and revised numbering.	3.4.15 SR 3.4.15.2	15.3.1.D.7, Table 15.4.1-1 Item 28
3.4.15 A2	Revises CTS by adopting a Note stating LCO 3.0.4 is not applicable, thus allowing a MODE change when the requirements of a LCO are not met. This change is administrative because the CTS does not contain a provision that disallows change in plant conditions when the requirements of the LCO are not met. Therefore, adopting the Note does not change any operational restrictions.	3.4.15 Required Action B.1.1 Note	N/A

Table A – Administrative Changes
ITS Section 3.4 – Reactor Coolant System (RCS)

DOC No.	Description of Change	ITS Requirement	CTS Requirement
3.4.15 A3	Revises CTS by adopting ACTIONS of NUREG-1431 for no operable RCS leakage detection monitors, requiring entry into LCO 3.0.3. CTS does not provide explicit requirements for non-compliance with the LCO, therefore adoption of the ACTIONS is consistent with the requirements of CTS 15.3.0.B and 15.3.0.C.	3.4.15 ACTION D, 3.4.15 Required Action D.1	15.3.0.B and 15.3.0.C
3.4.16 A1	Editorial changes, reformatting, and revised numbering.	3.4.16, 3.4.16 ACTION A, 3.4.16 Required Action A.2, 3.4.16 ACTION B, 3.4.16 Required Action B.1, 3.4.16 ACTION C, 3.4.16 Required Action C.1, 3.4.16 Figure 3.4.16-01, SR 3.4.16.3, SR 3.4.16.2	15.3.1 Figure 15.3.1-5, 15.3.1.C.1, 15.3.1.C.1.a, 15.3.1.C.1.b, 15.3.1.C.2, Table 15.4.1-2 Item 1.3, Table 15.4.1-2 Item 1.4
3.4.16 A2	The Bases have been completely replaced by revised Bases that reflect the format and applicable content of NUREG-1431.	3.4.16 Bases	Bases
3.4.16 A3	Revises CTS by adopting a Note stating LCO 3.0.4 is not applicable, thus allowing a MODE change when the requirements of a LCO are not met. This change is administrative because the CTS does not contain a provision that disallows change in plant conditions when the requirements of the LCO are not met. Therefore, adopting the Note does not change any operational restrictions.	3.4.16 Required Action A.1 Note	N/A

Table L – Less Restrictive Changes
ITS Section 3.4 – Reactor Coolant System (RCS)

DOC No.	Description of Change	ITS Requirement	CTS Requirement	Change Type
3.4.1 L1	Addition of a Note to indicate the limit on pressurizer pressure is not applicable during short term operational transients. This Note relaxes the requirements on pressurizer pressure.	3.4.1 Applicability Note A, 3.4.1 Applicability Note B	N/A	1
3.4.1 L2	Extends the time allowed to restore DNB parameters to within limits before unit shutdown is required.	3.4.1 ACTION A, 3.4.1 Required Action A.1, 3.4.1 ACTION B, 3.4.1 Required Action B.1	N/A	1
3.4.2 NONE	NONE	NONE	NONE	NONE
3.4.3 L1	Relaxes CTS requirement to place the unit in a shutdown condition when RCS pressure and temperature are not within limits, if the parameter(s) of concern can be restored to within limits within 30 minutes.	3.4.3 ACTION A, 3.4.3 Required Action A.1, 3.4.3 Required Action A.2, 3.4.3 Required Action B.1, 3.4.3 Required Action B.2, 3.4.3 ACTION B	N/A	4
3.4.4 NONE	NONE	NONE	NONE	NONE
3.4.5 NONE	NONE	NONE	NONE	NONE

CHANGE TYPES

1. Relaxation of LCO Requirement
2. Relaxation of Applicability
3. Relaxation of Surveillance Requirement
4. Relaxation of Required Action
5. Relaxation of CTS Reporting Requirements
6. Relaxation of Completion Time
7. Deletion of Requirements Redundant to Regulations

Table L – Less Restrictive Changes
ITS Section 3.4 – Reactor Coolant System (RCS)

DOC No.	Description of Change	ITS Requirement	CTS Requirement	Change Type
3.4.6 L1	Relaxes the conditions under which the decay heat removal capability requirements of CTS 15.3.1.A.3.a apply.	3.4.6	15.3.1.A.3.a	2
3.4.7 L1	Relaxes the CTS decay heat removal requirements in MODE 5 with RCS loops filled, such that an OPERABLE SG may be used in place of an RHR loop, based on the large volume of secondary water in the SG that acts as a heat sink.	3.4.7 A, 3.4.7 B	15.3.1.A.3.b.(1), N/A	1
3.4.7 L2	Relaxes CTS decay heat removal requirements by permitting the RHR pump of the loop in operation to not be in operation for up to 1 hour in any 8 hour period, to permit tests that are designed to validate various accident analyses values. This allowance may only be used if no operations which could cause a reduction of RCS boron concentration are being performed and core outlet temperature is maintained at least 10 °F below saturation temperature.	3.4.7 Note 1, 3.4.7 Note 1A, 3.4.7 Note 1B	N/A	1
3.4.7 L3 ~~open~~	Relaxes CTS decay heat removal requirements by explicitly permitting removal of RHR loops from operation when at least one RCS loop is in operation. This relaxation provides for an orderly transition from MODE 5 to MODE 4 during a planned heatup, and allows the performance of required leakage and flow testing.	3.4.7 Note 4, SR 3.4.14.1	N/A	1
3.4.8 L1	Relaxes CTS decay heat removal requirements by permitting all RHR pumps to not be in operation for up to 15 minutes when switching from one loop to another, to permit tests that are designed to validate various accident analyses values. This allowance may only be used if no operations which could cause a reduction of RCS boron concentration are being performed, core outlet temperature is maintained at least 10 °F below saturation temperature, and no draining operations to further reduce the RCS water volume are permitted.	3.4.8 Note 1, 3.4.8 Note 1.A, 3.4.8 Note 1.B, 3.4.8 Note 1.C	N/A	1

CHANGE TYPES

1. Relaxation of LCO Requirement
2. Relaxation of Applicability
3. Relaxation of Surveillance Requirement
4. Relaxation of Required Action
5. Relaxation of CTS Reporting Requirements
6. Relaxation of Completion Time
7. Deletion of Requirements Redundant to Regulations

Table L – Less Restrictive Changes
ITS Section 3.4 – Reactor Coolant System (RCS)

DOC No.	Description of Change	ITS Requirement	CTS Requirement	Change Type
3.4.9 L1	Relaxes CTS pressurizer requirements by not retaining the minimum pressurizer water level limit, because it is not required to preserve accident analysis assumptions. Although, the operability of the pressurizer heaters is dependent on adequate pressurizer water level, and the required actions for required pressurizer heaters inoperable would be required if the heaters became uncovered.	3.4.9	15.3.1.A.6	1
3.4.10 L1	Relaxes CTS requirement to place the unit in a shutdown condition whenever a pressurizer safety valve is inoperable, if the pressurizer safety valve can be restored to an operable status within 15 minutes.	3.4.10 ACTION A, 3.4.10 Required Action A.1, 3.4.10 ACTION B, 3.4.10 Required Action B.1, 3.4.10 Required Action B.2	N/A	6
3.4.10 L2	Relaxes CTS requirement for pressurizer safety valves, by allowing the safety valve lift settings to be outside the LCO limits for the purpose of setting the safety valves under ambient (hot) conditions, if the valves have had a preliminary cold setting.	3.4.10 Note	N/A	1
3.4.10 L3	Eliminates CTS requirement for one pressurizer safety valve to be operable when the reactor vessel head is on the vessel, based on the overpressure protection afforded by LTOP.	N/A	15.3.1.A.4.a	1
3.4.11 L1	Eliminates CTS PORV automatic actuation surveillance requirement, because this function is not assumed in the accident analyses for the mitigation of a design basis accident or transient.	N/A	Table 15.4.1-1 Item 34, Table 15.4.1-1 Item 34 Note (11)	3

CHANGE TYPES

1. Relaxation of LCO Requirement
2. Relaxation of Applicability
3. Relaxation of Surveillance Requirement
4. Relaxation of Required Action
5. Relaxation of CTS Reporting Requirements
6. Relaxation of Completion Time
7. Deletion of Requirements Redundant to Regulations

Table L – Less Restrictive Changes
ITS Section 3.4 – Reactor Coolant System (RCS)

DOC No.	Description of Change	ITS Requirement	CTS Requirement	Change Type
3.4.11 LB1	Eliminates the testing requirement for the PORV and PORV block valve position indicators, because it is incorporated in the IST program.	N/A	Table 15.4.1-1 Item 33, Table 15.4.1-1 Item 35, Table 15.4.1-1 Item 35 Note (21)	7
3.4.12 L1	Relaxes CTS surveillance requirement on the LTOP System by reducing the frequency from shiftly to 72 hours, based on the availability of LTOP enabling indications in the control room.	SR 3.4.12.4	Table 15.4.1-1 Item 32, Table 15.4.1-1 Item 32 Note (12)	3
3.4.12 LB1	Relaxes CTS requirement for testing the PORVs, PORV Solenoid Air Control Valves, and Air System Check in accordance with the inservice test requirements of the ASME Boiler and Pressure Vessel Code, Section XI, because this information is duplicated in 10CFR 50.55a.	N/A	Table 15.4.1-2 Item 27 Note (16)	7
3.4.13 L1	Relaxes the CTS action requirement allowed time for exceeding primary to secondary leakage limits, based on the low probability of further degradation of the reactor coolant pressure boundary (RCPB) in the additional time interval.	3.4.13 Required Action B.1, 3.4.13 Required Action B.2	15.3.1.D.4	6
3.4.13 L2	Eliminates details associated with the CTS requirement for a Primary System Leakage Evaluation.	3.4.13	Table 15.4.1-2 Item 16 Note (6)	3
3.4.13 L3	Relaxes CTS by not requiring the Primary System Leakage Evaluation to be performed in MODES 3 or 4 until 12 hours of steady state operation, because steady state operation is required to perform a proper RCS water inventory balance.	SR 3.4.13.1 Note	N/A	3

CHANGE TYPES

1. Relaxation of LCO Requirement
2. Relaxation of Applicability
3. Relaxation of Surveillance Requirement
4. Relaxation of Required Action
5. Relaxation of CTS Reporting Requirements
6. Relaxation of Completion Time
7. Deletion of Requirements Redundant to Regulations

Table L – Less Restrictive Changes
ITS Section 3.4 – Reactor Coolant System (RCS)

DOC No.	Description of Change	ITS Requirement	CTS Requirement	Change Type
3.4.13 L4	Eliminates CTS requirement to perform a follow-up evaluation of the safety implications of RCS leakage, because it is not required in order to provide adequate protection of the public health and safety.	N/A	15.3.1.D.1, 15.3.1.D.3	4
3.4.14 L1	Relaxes CTS requirements for RCS PIVs by providing clarification that separate Condition entry is allowed for each flow path, based on the functional independence of the flow paths involved.	3.4.14 ACTION Note 1	N/A	4
3.4.14 L2	Relaxes CTS Completion Time associated with Required Action for leakage from any PIV not within limits, based on the time usually required to perform this action and considers the low probability of another valve failing during this period.	3.4.14 Required Action A.1, 3.4.14 Required Action A.2	15.3.16.B, 15.3.16.B Note (a)	6
3.4.14 L3	Relaxes the Completion Time for placing the unit in MODE 5, if the required actions associated with PIV leakage not within limits are not met.	3.4.14 Required Action B.1, 3.4.14 Required Action B.2	15.3.16.C	6
3.4.14 L4	Relaxes CTS requirement by extending the time the unit can be in cold shutdown before PIV leakage is required to be verified.	SR 3.4.14.1	15.4.16.A	3
3.4.14 L5	Eliminates CTS requirement to periodically record the integrity of the remaining valve in each high pressure line having a leaking valve, as well as the position of one other valve located in the high pressure piping, based on the administrative controls governing valve operation and the low probability of misalignment of these valves.	3.4.14 Required Action A.1 Note	15.4.16.B, N/A	3
3.4.15 L1	Relaxes the time whereby the RCS leakage detection systems sensitive to radioactivity may be out of service.	3.4.15 Required Action B.2.1	15.3.1.D.7	6

CHANGE TYPES

1. Relaxation of LCO Requirement
2. Relaxation of Applicability
3. Relaxation of Surveillance Requirement
4. Relaxation of Required Action
5. Relaxation of CTS Reporting Requirements
6. Relaxation of Completion Time
7. Deletion of Requirements Redundant to Regulations

Table L – Less Restrictive Changes
ITS Section 3.4 – Reactor Coolant System (RCS)

DOC No.	Description of Change	ITS Requirement	CTS Requirement	Change Type
3.4.15 L2	Eliminates CTS requirements to perform a monthly CHECK on the containment water level instrumentation.	N/A	Table 15.4.1-1 Item 28	3
3.4.16 L1	Eliminates CTS requirement to perform an isotopic analysis for Iodine once per 4 hours when reactor coolant activity exceeds 100/E microcuries/gram.	N/A	Table 15.4.1-2 Item 1.5 a) Note (6)	4
3.4.16 L2	Relaxes CTS frequency for analyzing reactor coolant samples for gross activity.	SR 3.4.16.1	Table 15.4.1-2 Item 1.1	3
3.4.16 L3	Relaxes CTS requirement for performing an isotopic analysis for Dose Equivalent I-131 on the reactor coolant.	SR 3.4.16.2 Note	Table 15.4.1-2 Item 1.4 Note (1)	3
3.4.16 L4	Eliminates CTS requirement to analyze reactor coolant samples for gross activity at least once per week during periods of refueling shutdown.	N/A	Table 15.4.1-2 Item 1.1 Note (7)	3

CHANGE TYPES

1. Relaxation of LCO Requirement
2. Relaxation of Applicability
3. Relaxation of Surveillance Requirement
4. Relaxation of Required Action
5. Relaxation of CTS Reporting Requirements
6. Relaxation of Completion Time
7. Deletion of Requirements Redundant to Regulations

Table M – More Restrictive Changes
ITS Section 3.4 – Reactor Coolant System (RCS)

DOC No.	Description of Change	ITS Requirement	CTS Requirement
3.4.1 M1	Increases the conditions over which the CTS requirements for pressurizer pressure, RCS coolant average temperature, and RCS flow rate must be maintained to ensure DNBR criteria will be met in the event of an unplanned loss of forced coolant flow or other DNB limited transient.	3.4.1	15.3.1.G
3.4.1 M2	Not used.	N/A	N/A
3.4.1 M3	Not used.	N/A	N/A
3.4.1 M4	Adopts STS requirements to verify pressurizer pressure and RCS average temperature within limits every 12 hours, and verify measured RCS total flow rate within limits every 18 months.	SR 3.4.1.1, SR 3.4.1.2, SR 3.4.1.3	N/A
3.4.2 M1	Imposes a more restrictive requirement than the CTS for the minimum temperature at which the reactor can be taken critical.	3.4.2	15.3.1.F.4
3.4.2 M2	Adopts STS Required Action to shutdown the unit to below the Mode of Applicability within 30 minutes for T_{avg} in one or more RCS loops not within minimum temperature for criticality limits. Also adopts STS requirement to verify the RCS loop average temperature to be at or above the minimum temperature for criticality every 30 minutes, when the low low T_{avg} alarm is not reset and any RCS loop T_{avg} less than 547 °F.	3.4.2 Required Action A.1, 3.4.2 ACTION A, SR 3.4.2.1	N/A
3.4.3 M1	Adopts STS Required Actions to immediately correct operation outside of the P/T limits with RCS temperature ≤ 200 °F, and requires an evaluation to determine if RCS operation can continue. Also adopts STS requirement to verify that operation is within the limits of the PTLR every 30 minutes when RCS pressure and temperature conditions are undergoing planned changes.	3.4.3 ACTION C, 3.4.3 Required Action C.1, 3.4.3 Required Action C.2, SR 3.4.3.1, SR 3.4.3.1 Note	N/A
3.4.4 M1	Adopts STS requirement to verify that each RCS loop is in operation every 12 hours.	SR 3.4.4.1	N/A
3.4.5 M1	Increases the RCP loop requirements in MODE 3 from one RCP in operation and one operable steam generator, to two RCS loops operable and one RCS loop in operation, to ensure redundant capability for decay heat removal.	3.4.5	15.3.1.A.1.b, 15.3.1.A.2.a
3.4.5 M2	Adopts STS Note to limit the time both RCPs can be deenergized for testing, because unlimited operation with no RCPs operating could permit boron stratification.	3.4.5 Note	15.3.1.A.1.b.1

Table M – More Restrictive Changes
ITS Section 3.4 – Reactor Coolant System (RCS)

DOC No.	Description of Change	ITS Requirement	CTS Requirement
3.4.5 M3	Adopts STS Required Actions for not meeting the RCS loop requirements in MODE 3. Also adopts STS requirements to verify the required RCS loops are in operation every 12 hours, verify adequate secondary side steam generator water level every 12 hours, and verify the RCP breaker alignment and power availability every 7 days.	3.4.5 ACTION A, 3.4.5 Required Action A.1, 3.4.5 ACTION B, 3.4.5 Required Action B.1, 3.4.5 ACTION C, 3.4.5 Required Action C.1, 3.4.5 Required Action C.2, 3.4.5 Required Action C.3, SR 3.4.5.1, SR 3.4.5.2, SR 3.4.5.3	N/A
3.4.5 M4	Imposes additional restrictions by adopting STS requirement to restore an inoperable RCS loop in MODE 3 to OPERABLE status in 72 hours.	3.4.5 Required Action A.1, 3.4.5 Required Action B.1	15.3.3.A.3
3.4.6 M1	CTS specifies either RCP can be used with an operable SG to comprise an operable RCS Loop. ITS imposes additional restrictions by adopting STS definition of an OPERABLE RCS loop as comprising an OPERABLE RCP and an OPERABLE SG.	LCO 3.4.6	15.3.1.A.3.a.(1).a, 15.3.1.A.3.a.(1).b
3.4.6 M2	Imposes additional restrictions by deleting one of the options whereby a RCP is allowed to be started with RCS temperature less than 355 °F.	N/A	15.3.15.B.2.a
3.4.6 M3	Imposes additional restrictions by deleting one of the options whereby a RCP is allowed to be started with RCS temperature less than 355 °F.	N/A	15.3.15.B.2.a
3.4.6 M4	Imposes additional restrictions by adopting the STS requirement to place the unit in MODE 5 when redundant capability for decay heat removal is lost in MODE 4.	3.4.6 ACTION B, 3.4.6 Required Action B.1	N/A
3.4.6 M5	Adopts STS requirements in MODE 4 to verify that one RCS loop or RHR loop is in operation every 12 hours, verify adequate secondary side steam generator water level every 12 hours, and ensure that an additional RCS or RHR pump is operable every 7 days.	SR 3.4.6.1, SR 3.4.6.2, SR 3.4.6.3	N/A

Table M – More Restrictive Changes
ITS Section 3.4 – Reactor Coolant System (RCS)

DOC No.		Description of Change	ITS Requirement	CTS Requirement
3.4.7	M1	Imposes additional restrictions by expanding the conditions under which the requirements for decay heat removal in cold shutdown apply (i.e., ITS MODE 5 with RCS average temperature ≤ 200°F versus CTS Refueling Shutdown with RCS average temperature ≤ 140°F.	3.4.7 ~~Applicabilty~~Applicability	15.3.1.A.3.b
3.4.7	M2	Imposes additional requirements by limiting the time that one of the two required RHR loops may be out of service to meet surveillance requirements in MODE 5 with RCS loops filled.	3.4.7 Note 2	15.3.1.A.3.b.(4)
3.4.7	M3	Imposes additional restrictions by deleting one of the options whereby a RCP is allowed to be started with RCS temperature less than 355°F.	N/A	15.3.15.B.2.a
3.4.7	M4	Imposes additional restrictions by deleting one of the options whereby a RCP is allowed to be started with RCS temperature less than 355°F.	N/A	15.3.15.B.2.a
3.4.7	M5	Adopts the STS Required Actions associated with an inoperable RHR loop concurrent with an inadequate SG secondary side water level in MODE 5 with RCS loops filled.	3.4.7 ACTION A, 3.4.7 Required Action A.1, 3.4.7 Required Action A.2	N/A
3.4.7	M6	Adopts STS requirements in MODE 5 with RCS loops filled to verify that one RHR loop is in operation every 12 hours, verify adequate secondary side steam generator water level every 12 hours, and ensure that an additional RHR pump is operable every 7 days.	SR 3.4.7.1, SR 3.4.7.2, SR 3.4.7.3	N/A
3.4.8	M1	Imposes additional restrictions by expanding the conditions under which the requirements for decay heat removal in cold shutdown apply.	3.4.8	15.3.1.A.3.b
3.4.8	M2	Imposes additional requirements by limiting the time that one of the two required RHR loops may be out of service to meet surveillance requirements in MODE 5with RCS loops not filled.	3.4.8 Note 2	15.3.1.A.3.b.(4)
3.4.8	M3	Imposes additional restrictions on unit operation by adopting the STS Required Actions for one RHR loop inoperable in MODE 5 with RCS loops not filled.	3.4.8 ACTION A, 3.4.8 Required Action A.1	N/A
3.4.8	M4	Adopts STS requirements in MODE 5 with RCS loops not filled to verify that the required RHR loop is in operation every 12 hours, and verify that an additional RHR pump is operable every 7 days.	SR 3.4.8.1, SR 3.4.8.2	N/A
3.4.9	M1	Adopts the STS requirement for the required pressurizer heaters to be powered from a safeguards bus.	3.4.9	15.3.1.A.6

Table M – More Restrictive Changes
ITS Section 3.4 – Reactor Coolant System (RCS)

DOC No.		Description of Change	ITS Requirement	CTS Requirement
3.4.9	M2	Imposes additional restrictions by expanding the conditions under which the requirements for pressurizer operability apply, and imposes a more restrictive requirement for pressurizer water level in MODE 1, consistent with the initial condition assumptions used in the accident analysis for a loss of normal feedwater.	3.4.9	15.3.1.A.6, 15.3.1.F.5
3.4.9	M3	Not used.	N/A	N/A
3.4.9	M4	Adopts STS requirement to verify pressurizer water level is maintained below the nominal upper limit every 12 hours during steady state operation.	SR 3.4.9.1	N/A
3.4.10	M1	Imposes additional restrictions by stating the pressurizer safety valves lift settings within the LCO.	3.4.10	15.3.1.A.4.b
3.4.10	M2	Imposes additional restrictions by expanding the conditions under which the requirements for pressurizer safety valves apply.	3.4.10	15.3.1.A.4.b
3.4.11	M1	Imposes additional restrictions by expanding the conditions under which the requirements for PORVs and their associated block valves apply, thereby encompassing the conditions of unit operation where they are required to mitigate a SGTR event.	3.4.11	15.3.1.A.5.a
3.4.11	M2	Adopts the STS Required Actions for not restoring the inoperable PORV or block valve to operable status in 72 hours, whereby the unit is required to be placed in a condition where manual actuation of the PORVs is not required to mitigate the SGTR event.	3.4.11 Required Action D.1, 3.4.11 Required Action D.2	15.3.1.A.3.a.(4), 15.3.1.A.5.a.(1), 15.3.1.A.5.a.(2), N/A
3.4.11	M3	Adopts the STS Required Actions for not restoring either inoperable PORV to operable status in 1 hour, whereby the unit is required to be placed in a condition where manual actuation of the PORVs is not required to mitigate the SGTR event.	3.4.11 Required Action E.3, 3.4.11 Required Action E.4	15.3.1.A.5.a.(3)
3.4.11	M4	Adopts the STS Required Actions for not restoring either inoperable PORV block valve to operable status in 2 hours, whereby the unit is required to be placed in a condition where manual actuation of the PORVs is not required to mitigate the SGTR event.	3.4.11 Required Action G.1, 3.4.11 Required Action G.2	15.3.1.A.3.a.(5), N/A
3.4.11	M5	Adopts the STS requirements for testing PORVs and solenoid air control valves and check valves on the nitrogen gas bottles in the PORV control systems.	N/A	Table 15.4.1-2 Item 27 Note (15)
3.4.12	M1	Imposes additional restrictions by not retaining the CTS statement regarding RCS not being open to the atmosphere as a condition of operability for LTOP. This restriction is being changed to require pressure relief capabilities consistent with assumptions of the analysis.	3.4.12.C.2	15.3.15.A.1

Table M – More Restrictive Changes
ITS Section 3.4 – Reactor Coolant System (RCS)

DOC No.	Description of Change	ITS Requirement	CTS Requirement
3.4.12 M2	Adopts the STS requirements to isolate the accumulators when accumulator pressure is greater than or equal to the maximum RCS pressure for the existing RCS cold leg temperature allowed by the P/T limit curves provided in the PTLR. Also adopts the STS Required Actions if this LCO is not met, and the STS requirement to verify the accumulator discharge isolation valves closed and locked out every 12 hours.	SR 3.4.12.2, 3.4.12.B, 3.4.12 ACTION B, 3.4.12 Required Action B.1, 3.4.12 ACTION C , 3.4.12 Required Action C.1, 3.4.12 Required Action C.2	N/A
3.4.12 M3	Imposes additional restrictions by requiring LTOP to be operable under depressurized and vented conditions (with the reactor vessel head on).	3.4.12.C.2	N/A
3.4.12 M4	Adopts the STS requirement to verify that a maximum of one SI pump is capable of injecting into the RCS every 12 hours when LTOP is required to be operable.	SR 3.4.12.1	15.3.15.B.1
3.4.12 M5	Adopts STS Required Actions in the event more than one SI pump is capable of injecting into the RCS when LTOP is required to be operable.	3.4.12 ACTION A, 3.4.12 Required Action A.1	N/A
3.4.12 M6	Imposes additional restrictions by preventing entry into MODE 6 with the reactor vessel head on, from MODE 6 with the reactor vessel head removed, if the requirements of the LTOP LCO not met.	3.4.12 ACTIONS Note, SR 3.4.12.5	Table 15.4.1-1 Item 32 Note (10)
3.4.12 M7	Imposes additional restrictions by adopting the STS frequency for performance of required surveillances on PORVs and the solenoid air control valve and check valve on the air accumulators in the PORV control systems.	SR 3.4.12.7, SR 3.4.12.8	Table 15.4.1-2 Item 27
3.4.13 M1	Imposes additional restrictions on unit operation by adopting STS unidentified RCS leakage limit of 1 gpm.	3.4.13 Required Action A.1	15.3.1.D.1
3.4.13 M2	Imposes additional restrictions by adopting STS Required Actions for RCS leakage not within limits.	3.4.13 B, 3.4.13 ACTION B	15.3.1.D.2
3.4.13 M3	Imposes additional restrictions by specifically stating the conditions under which the RCS leakage requirements apply, consistent with the STS.	3.4.13	15.3.1.D.2

Table M – More Restrictive Changes
ITS Section 3.4 – Reactor Coolant System (RCS)

DOC No.	Description of Change	ITS Requirement	CTS Requirement
3.4.13 M4	Imposes additional restrictions by adopting STS Required Actions for RCS leakage through a non-isolable fault in a reactor coolant system component.	3.4.13 Required Action B.1, 3.4.13 Required Action B.2	15.3.1.D.5
3.4.13 M5	Imposes additional restrictions by adopting STS surveillance frequency for performance of a RCS water inventory balance.	SR 3.4.13.1	Table 15.4.1-2 Item 16
3.4.14 M1	Imposes additional restrictions by adopting STS requirement to evaluate affected systems, if a PIV is inoperable.	3.4.14 ACTION Note 2	N/A
3.4.14 M2	Imposes additional restrictions by adopting STS surveillance frequency for verification of PIV leakage.	SR 3.4.14.1	15.4.16.A
3.4.14 M3	Imposes additional restrictions by adopting STS surveillance requirement to verify PIV leakage within 24 hours following valve actuation due to automatic or manual action or flow through the valve.	SR 3.4.14.1	N/A
3.4.15 M1	Imposes additional restrictions by expanding the conditions under which the requirements for RCS Leakage Detection Instrumentation apply.	3.4.15	15.3.1.D.7
3.4.15 M2	Imposes additional restrictions by specifying the monitors to be used to meet the RCS leakage monitoring requirements.	3.4.15 A, 3.4.15 B	15.3.1.D.7
3.4.15 M3	Imposes additional restrictions by adopting STS requirement to collect and analyze grab samples of the containment atmosphere or perform water inventory balances once per 24 hours, when the RCS leakage detection systems sensitive to radioactivity are inoperable.	3.4.15 ACTION B, 3.4.15 Required Action B.1.1, 3.4.15 Required Action B.1.2	15.3.1.D.7, N/A
3.4.15 M4	Revises CTS by adopting STS Required Actions for performance of a water inventory balance once per 24 hours, and restoration of an inoperable containment sump monitor to an operable status within 30 days.	3.4.15 ACTION A, 3.4.15 Required Action A.1, 3.4.15 Required Action A.2	N/A

Table M – More Restrictive Changes
ITS Section 3.4 – Reactor Coolant System (RCS)

DOC No.	Description of Change	ITS Requirement	CTS Requirement
3.4.15 M5	Imposes additional restrictions by adopting the STS Required Actions for not restoring the containment sump monitor or the containment atmosphere radioactivity monitor to an operable status.	3.4.15 ACTION C, 3.4.15 Required Action C.1, 3.4.15 Required Action C.2	N/A
3.4.15 M6	Imposes additional restrictions by adopting the STS requirement to perform a CHANNEL CALIBRATION of the required containment atmosphere radiation monitor every 18 months.	SR 3.4.15.3	N/A
3.4.15 M7	Imposes additional restrictions by adopting the STS requirement to perform a CHANNEL CHECK of the required containment atmosphere radioactivity monitor every 12 hours.	SR 3.4.15.1	N/A
3.4.15 M8	Imposes additional restrictions by expanding the conditions under which a CHANNEL CALIBRATION is required to be performed on the containment water level instrumentation.	SR 3.4.15.2	Table 15.4.1-1 Item 28
3.4.16 M1	Imposes additional restrictions by adopting the STS requirement to perform a radiochemical E-bar (E) determination on reactor coolant samples 31 days after a minimum of 2 EFPD and 20 days power operation since the reactor was last subcritical for 48 hours or longer.	SR 3.4.16.3 Note	Table 15.4.1-2 Item 1.3 Note (10)
3.4.16 M2	Imposes additional restrictions by adopting the STS requirement to verify the reactor coolant DOSE EQUIVALENT I-131 specific activity is within the acceptable region of Figure 3.4.16-1 once per 4 hours when DOSE EQUIVALENT I-131 exceeds 0.8 microcuries/gram.	3.4.16 Required Action A.1	Table 15.4.1-2 Item 1.5 a)
3.4.16 M3	Imposes additional restrictions by adopting the STS requirement to verify the reactor coolant DOSE EQUIVALENT I-131 specific activity is less than or equal to 0.8 microcuries/gram, between 2 and 6 hours after a THERMAL POWER change of greater than or equal to 15% RTP within a 1 hour period.	3.4.16 ACTION A, SR 3.4.16.2	Table 15.4.1-02 Item 1.E, Table 15.4.1-2 Item 1.5 b)

Table R – Relocated Specifications and Removed Details
ITS Section 3.4 – Reactor Coolant System (RCS)

Doc No.		CTS Requirement	Description of Relocated Requirements	Location	Change Control Process	Change Type
3.4.1	LA.1	15.3.1.G.1, 15.3.1.G.2, 15.3.1.G.3	Limits for RCS T_{avg}, Pressurizer Pressure, and RCS total flow rate.	COLR	COLR Program described in ITS Section 5.6.4.	1
3.4.2	NONE	NONE	NONE	NONE	NONE	NONE
3.4.3	LA.1	15.3.1.B.1.a, 15.3.1.B.1.b, 15.3.1.B.1.c, 15.3.1.B.4	Limitations on the use of, and instructions for updating the pressure/temperature limit curves.	PTLR	PTLR Program described in ITS Section 5.6.5.	3
3.4.3	LA.2	Figure 15.3.1-1, Figure 15.3.1-2	Reactor Coolant System Heatup and Cooldown Limitations Curves.	PTLR	PTLR Program described in ITS Section 5.6.5.	1
3.4.3	R.1	15.3.1.B.2, Table 15.4.1-1 Item 10 Note (16)	Steam Generator Pressure/Temperature Limits.	TRM	10 CFR 50.59	N/A
3.4.3	R.2	15.3.1.B.3	Pressurizer Heat-up and Cool-down and spray water differential temperature Limits LCO and Surveillances.	TRM	10 CFR 50.59	N/A
3.4.4	R.1	15.3.1.A.7, 15.3.1.A.7.a, 15.3.1.A.7.b, 15.3.1.A.7.c, 15.3.1.A.7.d	Reactor Vessel Head Vent System LCO and Surveillances.	TRM	10 CFR 50.59	N/A
3.4.5	LA.1	15.3.1.A.1.b.(1).c	Specific method of preventing control rod withdrawal.	Bases	10 CFR 50.59	3
3.4.6	LA.1	15.3.1.A.3.A.1.C Note *, 15.3.1.A.3.A.1.D Note *	Information regarding the mechanical design provisions of the residual heat removal system.	FSAR	10 CFR 50.59	1

CHANGE TYPES

1. Details of System Design and System Description including Design Limits
2. Description of System or Plant Operation
3. Procedural Details for Meeting TS Requirement and Relocated Reporting Requirements
4. Relocated Redundant Requirements

Table R – Relocated Specifications and Removed Details
ITS Section 3.4 – Reactor Coolant System (RCS)

Doc No.	CTS Requirement	Description of Relocated Requirements	Location	Change Control Process	Change Type
3.4.6 LA.2	15.3.15.B.2	Value for the LTOP enabling temperature.	PTLR	PTLR Program described in ITS Section 5.6.5.	2, 4
3.4.7 LA.1	15.3.15.B.2	Value for the LTOP enabling temperature.	PTLR	PTLR Program described in ITS Section 5.6.5.	2, 4
3.4.8 NONE	NONE	NONE	NONE	NONE	NONE
3.4.9 NONE	NONE	NONE	NONE	NONE	NONE
3.4.10 LA.1	Table 15.4.1-2 Item 11, Table 15.4.1-2 Item 11 Note (11)	Details regarding testing of pressurizer safety valve.	IST Program	IST Program	3
3.4.10 R.1	N/A	N/A	N/A	N/A	N/A
3.4.11 LA.1	N/A	N/A	N/A	N/A	N/A
3.4.12 LA.1	15.3.15.A.1, 15.3.15.A.1.a, 15.3.15.A.2.a, 15.3.15.A.2.c	Value for the LTOP enabling temperature and the pressurizer power operated relief valve setpoints.	PTLR	10 CFR 50.59	2, 4
3.4.12 LA.2	15.3.15.B.1	Information on the methods of verifying a maximum of one safety injection pump capable of injecting into the RCS.	3.4.12 Bases	Bases Control Program described in ITS 5.5.13.	3
3.4.13 LA.1	15.3.1.D.1	Means by which leakage of reactor coolant from the RCS can be indicated.	3.4.13 Bases	Bases Control Program described in ITS 5.5.13.	3
3.4.13 LA.2	15.3.1.D.1	Details that any identified RCS leakage shall be considered to be real leakage until it is determined that either a safety problem does not exist, or that the indicated leak cannot be substantiated by direct observation or other indication.	3.4.13 Bases	Bases Control Program described in ITS 5.5.13.	3

CHANGE TYPES

1. Details of System Design and System Description including Design Limits
2. Description of System or Plant Operation
3. Procedural Details for Meeting TS Requirement and Relocated Reporting Requirements
4. Relocated Redundant Requirements

Table R – Relocated Specifications and Removed Details
ITS Section 3.4 – Reactor Coolant System (RCS)

Doc No.	CTS Requirement	Description of Relocated Requirements	Location	Change Control Process	Change Type
3.4.13 LA.3	N/A	N/A	N/A	N/A	N/A
3.4.13 R.1	15.4.3, 15.4.3.a), 15.4.3.a).2), 15.4.3.A.1, 15.4.3.b), 15.4.3.c)	Primary System Testing requirements.	TRM	10 CFR 50.59	N/A
3.4.14 LA.1	15.3.16.A, 15.3.16.B, Table 15.3.16-1	List of PIVs.	FSAR	10 CFR 50.59	1
3.4.14 LA.2	15.4.16.A, 15.4.16.A Note (a)	Details related to determining PIV leakage.	IST Program	IST Program	3
3.4.14 LA.3	15.4.16.A	Testing details related to PIV leakage.	IST Program	IST Program	3
3.4.15 LA.1	Table 15.4.1-1 Item 36.g, Table 15.4.1-1 Item 43	Surveillance requirements for the Air Ejector Monitor and Volume Control Tank Level instruments.	TRM	10 CFR 50.59	3
3.4.16 LA.1	N/A	N/A	N/A	N/A	N/A
3.4.16 LA.2	Table 15.4.1-2 Item 1.2	Requirement to analyze the reactor coolant for tritium activity.	TRM	10 CFR 50.59	4
3.4.16 LA.3	Table 15.4.1-2 Item 1.3 Note (2)	Requirements for determining radiochemical E-bar (E) related to the results of the RCS gross activity analysis.	TRM	10 CFR 50.59	4

CHANGE TYPES

1. Details of System Design and System Description including Design Limits
2. Description of System or Plant Operation
3. Procedural Details for Meeting TS Requirement and Relocated Reporting Requirements
4. Relocated Redundant Requirements

Table R – Relocated Specifications and Removed Details
ITS Section 3.4 – Reactor Coolant System (RCS)

Doc No.	CTS Requirement	Description of Relocated Requirements	Location	Change Control Process	Change Type
3.4.16 R.1	15.3.1.E, 15.3.1.E.1, 15.3.1.E.2, 15.3.1.E.3, 15.3.1.E.4, Table 15.4.1-2 Item 1.6, Table 15.4.1-2 Item 1.6 Note (8), Table 15.4.1-2 Item 1.7, Table 15.4.1-2 Item 1.7 Note (6), Table 15.4.1-2 Item 1.8	Portions of the RCS Water Chemistry LCO and Surveillances.	TRM	10 CFR 50.59	N/A

CHANGE TYPES

1. Details of System Design and System Description including Design Limits
2. Description of System or Plant Operation
3. Procedural Details for Meeting TS Requirement and Relocated Reporting Requirements
4. Relocated Redundant Requirements

Table A – Administrative Changes
ITS Section 3.5 – Emergency Core Cooling System

DOC No.	Description of Change	ITS Requirement	CTS Requirement
3.5.1 A1	Editorial changes, reformatting, and revised numbering of CTS requirements for Accumulators.	3.5.1	15.3.3
3.5.1 A2	CTS operability criteria for the safety injection accumulators have been retained in the ITS Surveillance Requirements.	SR 3.5.1.1, SR 3.5.1.2, SR 3.5.1.3, SR 3.5.1.4	15.3.3.A.1.b
3.5.1 A3	A CTS note specifies safety injection accumulator boron concentration requirements for plant operation prior to refueling outages U1R25 and U2R23. This note has been deleted because both Point Beach units will have completed their respective outage prior to issuance of the ITS.	N/A	15.3.3.A.1.b Note **
3.5.1 A4	The CTS provision allowing only a single safety injection accumulator to be isolated or otherwise inoperable for 1 hour is retained as ITS 3.5.1 ACTION C. Since CTS specify no action requirement for both accumulators inoperable, CTS 15.3.0.B would apply. ITS 3.5.1 ACTION E retains this requirement by specifying immediate entry into equivalent LCO 3.0.3. These changes are administrative since they do not modify or change any operational restrictions.	3.5.1 ACTIONS C and E	15.3.3.A.2, and 15.3.3.A.2.a
3.5.1 A5	The CTS provision allowing only a single safety injection accumulator to be isolated or otherwise inoperable for 1 hour is retained as ITS 3.5.1 ACTION C. The requirement to "check open" the other accumulator isolation valve before isolating an accumulator to perform check valve testing is not explicitly stated in the ITS, but is implied by LCO 3.5.1 and SR 3.5.1.1, which require the isolation valve to be open and periodically verified open to consider each accumulator operable. Thus omission of this explicit procedural requirement does not change existing operational restrictions, and is therefore an administrative change.	3.5.1 ACTION C	15.3.3.A.2.a
3.5.1 A6	The Bases have been completely replaced by revised Bases that reflect the format and applicable content of NUREG-1431.	3.5.1 Bases	Bases
3.5.1 A7	Removes the introductory Applicability statement at the beginning of each CTS section. These statements were strictly informational and did not establish any regulatory requirements.	3.5.1 title	15.3.3 Applicability
3.5.1 A8	Removes the introductory Objective statement at the beginning of each CTS section. These statements were strictly informational and did not establish any regulatory requirements.	3.5.1 title	15.3.3 Objective
3.5.1 A9	The CTS required channel check of accumulator pressure and level instruments is equivalently reflected as ITS Surveillance Requirements. This change is administrative because it does not result in a change to any operational restrictions.	SR 3.5.1.2, SR 3.5.1.3	Table 15.4.1-1 Item 18
3.5.1 A10	The CTS provision allowing restoration of power to the accumulator isolation valves for testing or maintenance for up to four hours has been retained in the ITS ACTION B.	3.5.1 ACTION B	15.3.3.A.1.i

Table A – Administrative Changes
ITS Section 3.5 – Emergency Core Cooling System

DOC No.	Description of Change	ITS Requirement	CTS Requirement
3.5.2 A1	Editorial changes, reformatting, and revised numbering of CTS requirements for emergency core cooling systems in CTS plant conditions equivalent to ITS MODES 1, 2, and 3.	3.5.2, 3.5.1 ACTION B, SR 3.5.1.3, SR 3.5.1.4	15.3.3.A.2, 15.3.3.A.3, 15.4.5, 15.4.5.I.A.2
3.5.2 A2	The implicitly stated CTS Applicability for the ECCS Systems has been equivalently reflected in the ITS as Modes 1, 2, 3, and 4. This change is considered administrative as it is consistent with current practice.	3.5.2	15.3.3.A.1
3.5.2 A3	CTS requirements that two safety injection (SI) pumps and two residual heat removal (RHR) pumps be operable, and that they be tested in accordance with ASME Section XI have been equivalently reflected in the ITS consistent with the format and presentation of the STS.	SR 3.5.2.2	15.3.3.A.1.c, 15.3.3.A.1.d, 15.4.2.B.3, 15.4.5.II.A.1
3.5.2 A4	The CTS requirement that valves in the discharge header of the SI system be verified to be in the correct position has been reflected as a Surveillance Requirement in the ITS. Accordingly, this change is administrative.	SR 3.5.2.1	15.3.3.A.1.f, ~~15.4.5.II.A.1~~
3.5.2 A5	CTS requirements for interlocks associated with ECCS pumps and valves, and requirements to perform system testing to verify that components receive their actuation signal and actuate to the correct position have been reflected in the ITS as Surveillance Requirements, making this change administrative.	SR 3.5.2.3, SR 3.5.2.4	15.3.3.A.1.g
3.5.2 A6	The 72 hour CTS allowance for restoration of an inoperable SI pump, RHR pump, or valve affecting an SI or RHR subsystem has been equivalently reflected in the ITS with respect to ECCS train operability. Accordingly, this change is administrative.	3.5.2 ACTION A	15.3.3.A.2.b, 15.3.3.A.2.c, 15.3.3.A.3.a, 15.3.3.A.3.c
3.5.2 A7	CTS provisions allowing components within the safety injection and residual heat removal systems be inoperable for up to 72 hours before requiring a unit shutdown have been equivalently reflected in the ITS as an allowance for one train of ECCS to be inoperable for up to 72 hours before requiring a unit shutdown. This change is administrative because it does not alter any operational restrictions.	3.5.2 ACTION A	15.3.3.A.2.b, 15.3.3.A.2.c, 15.3.3.A.3.a, 15.3.3.A.3.b, 15.3.3.A.3.c
3.5.2 A8	The Bases have been completely replaced by revised Bases that reflect the format and applicable content of NUREG-1431.	3.5.2 Bases	Bases

Table A – Administrative Changes
ITS Section 3.5 – Emergency Core Cooling System

DOC No.	Description of Change	ITS Requirement	CTS Requirement
3.5.2 A9	The CTS requirement that the SI and RHR pumps must start and reach their required developed head on the full flow test line have been reflected in the ITS as a requirement for the pumps to develop greater than or equal to their required head at the test flow point. Accordingly, the CTS and the ITS requirements are equivalent, making this change administrative.	SR 3.5.2.2	15.4.5.II.A.2
3.5.2 A10	Removes the introductory Applicability statement at the beginning of each CTS section. These statements were strictly informational and did not establish any regulatory requirements.	3.5.2 title	15.3.3 Applicability 15.4.5 Applicability
3.5.2 A11	Removes the introductory Objective statement at the beginning of each CTS section. These statements were strictly informational and did not establish any regulatory requirements.	3.5.2 Bases	15.3.3 Objective 15.4.5 Objective
3.5.3 A1	Editorial changes, reformatting, and revised numbering of CTS requirements for emergency core cooling systems in CTS plant conditions equivalent to ITS MODE 4.	3.5.3, SR 3.5.3.1	15.3.3 Applicability, 15.4.5.II.A.1, 15.4.5.II.A.2
3.5.3 A2	CTS requirements for a single operable SI pump/subsystem and a single RHR subsystem in ITS Mode 4 have been equivalently reflected in the ITS as a requirement for a single operable ECCS train. This change is administrative because it does not result in a change to any operational restrictions. See related change described by DOC 3.5.3-M4.	LCO 3.5.3	15.3.3.A.1.c, 15.3.3.A.2, 15.3.3.A.3, 15.3.15.B, 15.3.3.B.1
3.5.3 A3	The Bases have been completely replaced by revised Bases that reflect the format and applicable content of NUREG-1431.	3.5.3 Bases	Bases
3.5.3 A4	The CTS requirement that the SI and RHR pumps be tested in accordance with ASME Section XI has been reflected in the ITS as a Surveillance Requirement. This change is administrative because it does not result in a change to any requirements or operational restrictions.	SR 3.5.3.1	15.4.2.B.3, 15.4.5.II.A.1
3.5.3 A5	The ITS contains an allowance that is inferred in the CTS which allows an RHR train to be considered operable during alignment and operation for decay heat removal, provided the train is capable of being manually realigned. This change is administrative since it clarifies plant practice.	LCO 3.5.3 Note	N/A
3.5.3 A6	Removes the introductory Applicability statement at the beginning of each CTS section. These statements were strictly informational and did not establish any regulatory requirements.	3.5.3 title	15.3.3 Applicability, 15.4.5 Applicability
3.5.3 A7	Removes the introductory Objective statement at the beginning of each CTS section. These statements were strictly informational and did not establish any regulatory requirements.	3.5.3 Bases	15.3.3 Objective, 15.4.5 Objective

Table A – Administrative Changes
ITS Section 3.5 – Emergency Core Cooling System

DOC No.	Description of Change	ITS Requirement	CTS Requirement
3.5.3 A8	The CTS requirement that valves in the discharge header of the SI system be verified to be in the correct position has been reflected by reference as a Surveillance Requirement in the ITS. Accordingly, this change is administrative.	SR 3.5.3.1	15.3.3.A.1.f, ~~15.4.5.II.B.2~~
3.5.3 A9	CTS requirements for interlocks associated with ECCS pumps and valves, and requirements to perform system testing to verify that components receive their actuation signal and actuate to the correct position have been reflected by reference in the ITS as Surveillance Requirements, making this change administrative.	SR 3.5.3.1	15.3.3.A.1.g
3.5.4 A1	Editorial changes, reformatting, and revised numbering of CTS requirements for the Refueling Water Storage Tank (RWST).	LCO 3.5.4, 3.5.4 Applicability, ACTION C, SR 3.5.4.2	15.3.3.A.1.a and g, 15.3.0.B
3.5.4 A2	CTS specifies RWST boron concentration requirements for plant operation prior to refueling outages U1R25 and U2R23 that have been deleted because both Point Beach units will have completed their respective outage prior to issuance of the ITS.	N/A	15.3.3.A.1.a Note *
3.5.4 A3	The Bases have been completely replaced by revised Bases that reflect the format and applicable content of NUREG-1431.	3.5.4 Bases	Bases
3.5.4 A4	The CTS requirement to sample the RWST boron concentration in Modes 1, 2, 3, and 4 have been reflected in the ITS. As such, this change is administrative.	SR 3.5.4.3	Table 15.4.1-2 Item 3 and Note (6)
3.5.4 A5	The implicitly specified CTS Applicability for the RWST has been equivalently reflected in the ITS as Modes 1, 2, 3, and 4. This change is considered administrative as it is consistent with current practice.	3.5.4 Applicability	15.3.3.A.1, 15.3.0.B
3.5.4 A6	Removes the introductory Applicability statement at the beginning of each CTS section. These statements were strictly informational and did not establish any regulatory requirements.	3.5.4 title	15.3.3 Applicability
3.5.4 A7	Removes the introductory Objective statement at the beginning of each CTS section. These statements were strictly informational and did not establish any regulatory requirements.	3.5.4 Bases	15.3.3 Objective
3.5.4 A8	The ITS adds Actions to address inoperability of the RWST that are equivalent to the plant shutdown requirements of CTS 15.3.0.B. This change is administrative in that the Actions and associated time frame of the CTS and the ITS are the same.	3.5.4 ACTIONS B and C	15.3.0.B

Table L – Less Restrictive Changes
ITS Section 3.5 – Emergency Core Cooling System

DOC No.	Description of Change	ITS Requirement	CTS Requirement	Change Type
3.5.1 L1	ITS relaxes the Applicability of requirements for the safety injection accumulators when RCS temperature is below 350 degrees F and RCS pressure is less than 1000 psig. CTS could be interpreted as requiring accumulators to be operable during all of ITS MODE 4, at RCS temperatures as low as 200 degrees F.	3.5.1, 3.5.1 ACTION D, SR 3.5.1.2, SR 3.5.1.3	15.3.3.A.1, 15.3.3.A.1.h 15.3.3.A.2, 15.4.1.1, Table 15.4.1-1 Item 18	2
3.5.1 L2	ITS relaxes the CTS allowable outage time for one safety injection accumulator to be inoperable due to boron concentration from one hour to 72 hours.	3.5.1 ACTION A	15.3.3.A.2.a	6
3.5.1 L3	CTS contains a requirement to perform a channel calibration of the safety injection accumulator level and pressure channels which has not been retained. ~~See Table R.~~	N/A	Table 15.4.1-1 Item 18	3
3.5.1 L4	ITS expands the CTS surveillance frequency for verifying accumulator level and pressure within limits by four hours from "once per shift," to "every 12 hours."	SR 3.5.1.2, SR 3.5.1.3	Table 15.4.1-1 Item 18	3
3.5.2 L1	ITS allows both safety injection (SI) flow paths to be isolated for two hours to perform testing, which is one hour longer than allowed under CTS. Additionally, the CTS requirement to have both SI pumps operable when RCS temperature is above 355 degrees is relaxed under ITS to not require the second SI pump until RCS temperature is greater than 375 degrees, and exceptions are provided to facilitate compliance with low temperature overpressure protection (LTOP) system restrictions.	LCO 3.5.2 Notes 1 and 2	15.3.3.A.1, 15.3.3.A.1.c,	1
3.5.2 L2	Details in the CTS related to the conditions and manner in which ECCS pump testing must be conducted have not been retained in the ITS.	N/A	15.4.5.II.A.2	3
3.5.2 L3	Details in the CTS related to the conditions and manner in which ECCS testing must be conducted and the manner in which equipment operation is to be verified have not been retained in the ITS.	N/A	15.4.5.I.A.1, 15.4.5.I.A.1.a, 15.4.5.I.A.2	3

CHANGE TYPES

1. Relaxation of LCO Requirement
2. Relaxation of Applicability
3. Relaxation of Surveillance Requirement
4. Relaxation of Required Action
5. Relaxation of CTS Reporting Requirements
6. Relaxation of Completion Time
7. Deletion of Requirements Redundant to Regulations

Table L – Less Restrictive Changes
ITS Section 3.5 – Emergency Core Cooling System

DOC No.	Description of Change	ITS Requirement	CTS Requirement	Change Type
3.5.2 L4	Relaxes CTS requirement by only requiring position verification of manual, power operated and automatic ECCS valves "in the ECCS flowpath," for valves that are not locked, sealed, or otherwise secured in position.	SR 3.5.2.1	15.4.5.II.B.2	3
3.5.3 L1	The ITS adds Actions to address the situation where one or both RHR systems are inoperable in Mode 4 (with RCS temperature between 200 degrees and 350 degrees) and RHR not being depended on for decay heat removal. These Actions are less restrictive than the plant shutdown requirements of CTS 15.3.0.B.	3.5.3 ACTION A	CTS 15.3.0.B 15.3.3.A.3, 15.3.3.A.3.a, 15.3.3.A.3.b, 15.3.3.A.3.c	4
3.5.3 L2	Details in the CTS related to the conditions and manner in which ECCS pump testing must be conducted have not been retained in the ITS.	N/A	15.4.5.II.A.2	3
3.5.3 L3	Details in the CTS related to the conditions and manner in which ECCS testing must be conducted and the manner in which equipment operation is to be verified have not been retained in the ITS.	N/A	15.4.5.I.A.1, 15.4.5.I.A.1.a, 15.4.5.I.A.2	3
3.5.3 L4	Relaxes CTS requirement by only requiring position verification of manual, power operated and automatic ECCS valves "in the ECCS flowpath," for valves that are not locked, sealed, or otherwise secured in position.	SR 3.5.3.1, SR 3.5.2.1	15.4.5.II.B.2	3
3.5.4 L1	The ITS adds a specific action requirement~~tions~~ to address the condition of RWST temperature or boron concentration out of limits that will allow 8 hours to restore the RWST to within limits, and which is less restrictive than the 1 hour allowed before commencing a plant shutdown specified by CTS 15.3.0.B.	3.5.4 ACTION A	15.3.0.B	6

CHANGE TYPES

1. Relaxation of LCO Requirement
2. Relaxation of Applicability
3. Relaxation of Surveillance Requirement
4. Relaxation of Required Action
5. Relaxation of CTS Reporting Requirements
6. Relaxation of Completion Time
7. Deletion of Requirements Redundant to Regulations

Table M – More Restrictive Changes
ITS Section 3.5 – Emergency Core Cooling System

DOC No.	Description of Change	ITS Requirement	CTS Requirement
3.5.1 M1	The CTS provision exempting the requirement to maintain the Safety Injection and Residual Heat Removal Systems operable during low power physics testing has not been retained in the ITS.	N/A	15.3.3.A.1
3.5.1 M2	The ITS adds an upper limit for safety injection (SI) accumulator pressure that was not provided in the CTS.	SR 3.5.1.3	15.3.3.A.1.b
3.5.1 M3	The CTS requirement that the accumulator isolation valves to be open with power removed from the valve at RCS pressures in excess of 1000 psig is expanded under the ITS through the addition of explicitly stated Surveillance Requirements.	SR 3.5.1.1, SR 3.5.1.5	15.3.3.A.1.h
3.5.1 M4	The ITS adds an upper limit for safety injection accumulator boron concentration that was not provided in the CTS.	SR 3.5.1.4	N/A
3.5.1 M5	ITS adds a Surveillance Requirement to verify boron concentration in any accumulator that has increased in level greater than or equal to 5% within 24 hours that did not appear in the CTS.	SR 3.5.1.4	Table 15.4.1-2 Item 6
3.5.2 M1	The CTS provision exempting the requirement to maintain the Safety Injection and Residual Heat Removal Systems operable during low power physics testing has not been retained in the ITS.	N/A	15.3.3.A.1
3.5.2 M2	ITS expands the CTS requirement to have both high head safety injection pumps operable when RCS temperature is above 355 degrees, to 350 degrees.	3.5.2 Applicability	15.3.3.A.1.c,15.3. 15.B.1
3.5.2 M3	The ITS adds a specific time limit that did not appear in the CTS for placing the unit into Mode 4 if a single SI pump or valve affecting a single SI subsystem is not restored to operable status.	3.5.2 Required Action B.2	15.3.3.A.2, 15.3.3.A.2.b and c
3.5.2 M4	ITS adds an Action to place the unit in Mode 4 within 12 hours if a single inoperable RHR subsystem is not returned to operable status within the allowed out of service time.	3.5.2 Required Action B.2	15.3.3.A.3,
3.5.2 M5	ITS specifies an 18 month frequency in place of a once each refueling frequency for Surveillance Testing intended to ensure that components receive their Safety Injection (SI) signal, appropriate pump motor breakers open and close, and verify that valves actuate and travel to their correct position.	SR 3.5.2.3, SR 3.5.2.4	15.4.5.I.A.1, 15.4.5.I.A.2
3.5.2 M6	ITS specifies an 18 month frequency in place of a once each refueling frequency for the Surveillance Requirement to perform a visual inspection of each containment sump suction inlet and strainer (debris screen) to verify that there is no restriction or evidence of structural distress or abnormal corrosion.	SR 3.5.2.5	15.4.5.II.B.1
3.5.2 M7	ITS eliminates the CTS provision allowing simultaneous inoperability of a safety injection and residual heat removal subsystem by only providing action requirements for a single inoperable ECCS train.	3.5.2 ACTION A	15.3.3.A.2, 15.3.3.A.3

Table M – More Restrictive Changes
ITS Section 3.5 – Emergency Core Cooling System

DOC No.	Description of Change	ITS Requirement	CTS Requirement
3.5.3 M1	ITS will require the unit to be placed into cold shutdown in a shorter time frame than the CTS when a Safety Injection subsystem is inoperable in Mode 4.	3.5.2 ACTION B, 3.5.2 ACTION C	15.3.3.A.2, 15.3.3.A.2.b, 15.3.3.A.2.c
3.5.3 M2	ITS specifies an 18 month frequency in place of a once each refueling frequency for the Surveillance Requirement to perform a visual inspection of each containment sump suction inlet and strainer (debris screen) to verify that there is no restriction or evidence of structural distress or abnormal corrosion.	SR 3.5.3.1, SR 3.5.2.5	15.4.5.II.B.1
3.5.3 M3	ITS specifies an 18 month frequency in place of a once each refueling frequency for Surveillance Testing intended to ensure that components receive their Safety Injection (SI) signal, appropriate pump motor breakers open and close, and verify that valves actuate and travel to their correct position.	SR 3.5.3.1, SR 3.5.2.3, SR 3.5.2.4	15.4.5.I.A.1, 15.4.5.I.A.2
3.5.3 M4	ITS expands the CTS requirement that one SI and one RHR pump system be operable in the equivalent of ITS Mode 4 by requiring that the SI and RHR pump systems be in the same ECCS train.	3.5.3	15.3.3.A.1.c, 15.3.3.A.1.d
3.5.4 M1	The CTS provision exempting the requirement to maintain the RWST operable during low power physics testing has not been retained in the ITS.	N/A	15.3.3.A.1
3.5.4 M2	The CTS specifies a minimum level requirement for the RWST; however, no periodic surveillance exists to verify this limit is met. Accordingly, a 7 day verification of RWST level is added to the ITS that is more restrictive than the CTS requirements.	SR 3.5.4.2	15.3.3.A.1.a
3.5.4 M3	Consistent with the STS, the ITS specifies an upper limit on RWST boron concentration, that was not reflected in the CTS.	SR 3.5.4.3	15.3.3.A.1.a
3.5.4 M4	CTS does not specify any RWST temperature limitations or periodic surveillances for RWST temperature. Accordingly, a periodic surveillance has been included added as ITS SR 3.5.4.2. This change is more restrictive that the CTS.	SR 3.5.4.1, SR 3.5.4.1 Note	N/A

Table R – Relocated Specifications and Removed Details
ITS Section 3.5 – Emergency Core Cooling System

Doc No.	CTS Requirement	Description of Relocated Requirements	Location	Change Control Process	Change Type
3.5.1 NONE	NONE	NONE	NONE	NONE	NONE
3.5.2 LA1	15.3.3.A.1.e	The CTS list of components associated with the SI and RHR Systems required to fulfill the ECCS LCO requirement.	3.5.2 Bases	Bases Control Program described in ITS 5.5.13.	1, 2, and 3
3.5.2 LA2	N/A	Not used.	N/A	N/A	N/A
3.5.2 LA3	N/A	Not used.	N/A	N/A	N/A
3.5.2 R1	15.3.2.A, B, C, and D, 15.3.2 Table 15.3.2-1, 15.4.1.A Table 15.4.1-1 Items 21, 22, and 23, 15.4.1.B Table 15.4.1-2 Items 4, 20 and 31, and Notes (17) and (19)	Requirements for the Boric Acid System.	TRM	10 CFR 50.59	N/A
3.5.3 LA1	15.4.5.I.A.1, 15.4.5.I.A.1.a, 15.4.5.I.A.2	The CTS list of components associated with the SI and RHR Systems required to fulfill the ECCS LCO requirement.	3.5.3 Bases	Bases Control Program described in ITS 5.5.13.	3
3.5.3 LA2	N/A	Not used.	N/A	N/A	N/A
3.5.3 LA3	N/A	Not used.	N/A	N/A	N/A
3.5.4 NONE	NONE	NONE	NONE	NONE	NONE

CHANGE TYPES

1. Details of System Design and System Description including Design Limits
2. Description of System or Plant Operation
3. Procedural Details for Meeting TS Requirement and Relocated Reporting Requirements, and Indication-Only Instrumentation Requirements
4. Relocated Redundant Requirements

Table A – Administrative Changes
ITS Section 3.6 – Containment Systems

DOC No.	Description of Change	ITS Requirement	CTS Requirement
3.6.1 A1	Editorial changes, reformatting, and revised numbering.	3.6.1, 3.6.1 ACTION A, 3.6.1 Required Action A.1, 3.6.1 ACTION B, 3.6.1 Required Action B.1, 3.6.1 Required Action B.2, SR 3.6.1.1, SR 3.6.1.2	15.3.6.A, 15.3.6.A.1.(a), 15.3.6.A.1.(a)(1), 15.3.6.A.1.(a)(2), 15.3.6.A.1.(a)(2)(a), 15.3.6.A.1.(a)(2)(b), 15.3.6.E, 15.4.2.B.2, 15.4.4.I, 15.4.4.II
3.6.1 A2	The CTS reference to an FSAR discussion of containment isolation valves has not been retained in the ITS since it did not establish any operational or regulatory requirements. This change does not alter any operational restrictions and is administrative.	DELETED	15.1.D Footnote *
3.6.1 A3	The CTS definition of Containment Integrity has been reflected in various ITS Section 3.6 LCOs. This change does not alter any operational restrictions and is administrative.	3.6.1, 3.6.2, and 3.6.3	15.1.D
3.6.1 A4	CTS requirements for containment integrity related to leakage limits and verification of isolation valves and blind flanges located inside the containment have been equivalently reflected in the ITS. These changes are administrative since they do not alter any operational restrictions.	SR 3.6.1.1, SR 3.6.3.3, 5.5.15	15.1.D.2), 15.1.D.4), 15.1.D.4) Note **
3.6.1 A5	Removes the introductory Applicability statement at the beginning of each CTS section. These statements simply state which systems/components are addressed within a given section, and are reflected in the ITS specification and section titles.	3.6.1 title	15.3.6 Applicability
3.6.1 A6	The Bases have been completely replaced by revised Bases that reflect the format and applicable content of NUREG-1431.	3.6.1 Bases	Bases
3.6.1 A7	CTS requirements for containment integrity have been equivalently reflected in the ITS as a requirement for the containment to be operable in Modes 1, 2, 3, and 4. This change does not alter operational restrictions and is administrative.	LCO 3.6.1, 3.6.1 Applicability	15.3.6.A.1
3.6.1 A8	Not used.	N/A	N/A
3.6.1 A9	Removes the introductory Objective statement at the beginning of each CTS section. These statements were strictly informational and did not establish any regulatory requirements.	3.6.1 Bases	15.3.6 Objective, 15.4.4 Objective

Table A – Administrative Changes
ITS Section 3.6 – Containment Systems

DOC No.	Description of Change	ITS Requirement	CTS Requirement
3.6.2 A1	Editorial changes, reformatting, and revised numbering.	3.6.2 ACTION Note 1, 3.6.2 ACTION Note 2, 3.6.2 ACTION Note 3, 3.6.3 ACTION A, 3.6.2 Required Action A.1 Note 1, 3.6.2 Required Action A.1 Note 2, 3.6.2 Required Action A.1, 3.6.2 Required Action A.2, 3.6.2 Required Action A.3, 3.6.2 Required Action A.3 Note, 3.6.2 ACTION B, 3.6.2 Required Action B.1 Note 1, 3.6.2 Required Action B.1 Note 2, 3.6.2 Required Action B.1, 3.6.2 Required Action B.2, 3.6.2 Required Action B.3, 3.6.2 Required Action B.3 Note, 3.6.3 ACTION C, 3.6.2 Required Action C.1, 3.6.2 Required Action C.2, 3.6.2 Required Action C.3, 3.6.3 ACTION D, 3.6.2 Required Action D.1, 3.6.2 Required Action D.2	15.3.6.A.1.d, 15.3.6.A.1.d.(1), 15.3.6.A.1.d.(1)(a), 15.3.6.A.1.d.(1)(b), 15.3.6.A.1.d.(1)(c), 15.3.6.A.1.d.(2), 15.3.6.A.1.d.(2)(a), 15.3.6.A.1.d.(2)(b), 15.3.6.A.1.d.(2)(c), 15.3.6.A.1.d.(3), 15.3.6.A.1.d.(3)(a), 15.3.6.A.1.d.(3)(b), 15.3.6.A.1.d.(3)(c), 15.3.6.A.1.d.(4), 15.3.6.A.1.d.(4)(a), 15.3.6.A.1.d.(4)(b)
3.6.2 A2	The CTS containment integrity definition requirement that at least one airlock door be closed has been reflected in the ITS as an airlock interlock Surveillance Requirement and Required Actions for an inoperable airlock interlock. This change is administrative since the CTS requirements continue to be addressed under ITS.	3.6.2 ACTION B, SR 3.6.2.2	15.1.D.3

Table A – Administrative Changes
ITS Section 3.6 – Containment Systems

DOC No.	Description of Change	ITS Requirement	CTS Requirement
3.6.2 A3	CTS requirements for containment integrity have been equivalently reflected in the ITS as a requirement for the containment to be operable in Modes 1, 2, 3, and 4. This change does not alter operational restrictions and is administrative.	LCO 3.6.2	15.3.6.A.1
3.6.2 A4	The Bases have been completely replaced by revised Bases that reflect the format and applicable content of NUREG-1431.	3.6.2 Bases	Bases
3.6.3 A1	Editorial changes, reformatting, and revised numbering.	3.6.3, 3.6.3 ACTION Note 1, 3.6.3 ACTION Note 2, 3.6.3 ACTION Note 3, 3.6.3 ACTION Note 4, 3.6.3 ACTION A, 3.6.3 ACTION A Note, 3.6.3 Required Action A.1, 3.6.3 Required Action A.2, 3.6.3 Required Action A.2 Note 1, 3.6.3 ACTION B, 3.6.3 ACTION B Note, 3.6.3 Required Action B.1, 3.6.3 ACTION C, 3.6.3 ACTION C Note, 3.6.3 Required Action C.2, 3.6.3 Required Action C.2 Note 1, 3.6.3 ACTION D, 3.6.3 Required Action D.1, 3.6.3 Required Action D.2, SR 3.6.3.1, SR 3.6.3.4	15.1.D.1).c, 15.3.6.A.1.b, 15.3.6.A.1.b.(1), 15.3.6.A.1.b.(1)(a), 15.3.6.A.1.b.(1)(a)(i), 15.3.6.A.1.b.(1)(a)(ii), 15.3.6.A.1.b.(1)(b), 15.3.6.A.1.b.(1)(b)(i), 15.3.6.A.1.b.(2), 15.3.6.A.1.b.(2)(a), 15.3.6.A.1.b.(2)(a)(ii), 15.3.6.A.1.b.(3), 15.3.6.A.1.b.(3)(a), 15.3.6.A.1.b.(3)(b), 15.3.6.A.1.c, 15.3.6.A.1.c.(1), 15.3.6.A.1.c.(2), Table 15.4.1-2 Item 23, 15.4.2.B.3
3.6.3 A2	The CTS definition of Containment Integrity has been reflected in various ITS Section 3.6 LCOs. This change does not alter any operational restrictions and is administrative.	LCO 3.6.3, SR 3.6.3.2, SR 3.6.3.3, SR 3.6.3.5	15.1.D, 15.1.D.1).a, 15.1.D.1).b, 15.1.D.2

Table A – Administrative Changes
ITS Section 3.6 – Containment Systems

DOC No.		Description of Change	ITS Requirement	CTS Requirement
3.6.3	A3	CTS requirements for containment integrity related to isolation valve operability have been equivalently reflected in the ITS as a requirement for the valves to be operable in Modes 1, 2, 3, and 4. This change does not alter operational restrictions and is administrative.	LCO 3.6.3, 3.6.3 Applicability	15.3.6.A.1
3.6.3	A4	CTS includes a statement requiring each penetration to be operable to satisfy containment integrity that has been equivalently reflected in various ITS Section 3.6 LCOs. Deletion of this statement is therefore administrative.	3.6.1, 3.6.2, and 3.6.3	15.3.6.A.1.b
3.6.3	A5	The CTS requirement to verify isolation devices that are closed to isolate a penetration flow path when two containment isolation valves are inoperable has been incorporated into the ITS. As such, this change does not alter operational restrictions and is administrative.	3.6.3 Required Action A.2, 3.6.3 Required Action A.2 Note 1,	15.3.6.A.1.b.(1)(b)(ii)
3.6.3	A6	The CTS provision allowing a single containment purge supply or exhaust valve to be opened to allow repair of a penetration has been reflected in the ITS as a Surveillance requirement. This change is administrative.	SR 3.6.3.1	15.3.6.A.1.(c), 15.3.6.A.1.(c)(1)
3.6.3	A7	The CTS requirement to verify that the containment purge supply and exhaust valves are locked and closed prior to and after exceeding an RCS temperature of 200 degrees F has been equivalently reflected in the ITS SR 3.0.4.	SR 3.0.4	Table 15.4.1-2 Item 23 Note (9)
3.6.3	A8	The Bases have been completely replaced by revised Bases that reflect the format and applicable content of NUREG-1431.	3.6.3 Bases	Bases
3.6.4	A1	Editorial changes, reformatting, and revised numbering.	3.6.4, 3.6.4 ACTION A, 3.6.4 Required Action A.1, 3.6.4 ACTION B, 3.6.4 Required Action B.1, 3.6.4 Required Action B.2	15.3.6.B, 15.3.6.B.1, 15.3.6.B.2, 15.3.6.B.2.a, 15.3.6.B.2.b
3.6.4	A2	Not used.	N/A	N/A
3.6.4	A3	The Bases have been completely replaced by revised Bases that reflect the format and applicable content of NUREG-1431.	3.6.4 Bases	Bases
3.6.4	A4	The CTS requirement to perform a channel check of the containment pressure instruments has been reflected in the ITS as a Surveillance Requirement to verify containment pressure is within limits. This change does not alter operational restrictions and is administrative.	SR 3.6.4.1	Table 15.4.1-1 Item 27
3.6.4	A5	Not used.	N/A	N/A

Table A – Administrative Changes
ITS Section 3.6 – Containment Systems

DOC No.	Description of Change	ITS Requirement	CTS Requirement
3.6.5 A1	The inclusion ITS Bases for the newly added ITS for containment air temperature is considered administrative since it does not alter any operational restrictions.	3.6.5 Bases	N/A
3.6.6 A1	Editorial changes, reformatting, and revised numbering.	3.6.6, 3.6.6 ACTION A, 3.6.6 ACTION B, 3.6.6 Required Action B.1, 3.6.6 ACTION C, 3.6.6 Required Action C.1, SR 3.6.6.1, SR 3.6.6.2, SR 3.6.6.4, SR 3.6.6.5, SR 3.6.6.8, SR 3.6.6.9	15.3.3.B.2, 15.3.3.B.2.a, 15.3.3.B.2.b, 15.4.2.B.3, 15.4.5.I.B.3, 15.4.5.I.C.1, 15.4.5.C.2, 15.4.5.II.A.1, 15.4.5.II.A.2, 15.4.5.II.B.2,
3.6.6 A2	Removes the introductory Applicability statement at the beginning of each CTS section. These statements were strictly informational and did not establish any regulatory requirements.	3.6.6	15.3.3 Applicability
3.6.6 A3	Removes the introductory Objective statement at the beginning of each CTS section. These statements were strictly informational and did not establish any regulatory requirements.	3.6.6 Bases	15.3.3.Objective
3.6.6 A4	CTS requirements for the Containment Spray trains and Containment Fan Cooler Units have been equivalently reflected in the ITS as a requirement for these trains/units to be operable in Modes 1, 2, 3, and 4. This change does not alter operational restrictions and is administrative.	LCO 3.6.6, 3.6.6 Applicability	15.3.3.B.1
3.6.6 A5	The CTS requirement that two containment spray pumps and their associated valves and piping be operable has been reflected in the ITS. This change in terminology does not alter operational restrictions and is administrative.	3.6.6	15.3.3.B.1.b, 15.3.3.B.1.d
3.6.6 A6	CTS requirement for four accident fan-cooler units and their associated valves and piping to be operable has been reflected in the ITS LCO and Surveillance Requirements. This change does not alter operational restrictions and is administrative.	3.6.6	15.3.3.B.1.c, 15.3.3.B.1.d
3.6.6 A7	The CTS provision that allows valves associated with an inoperable containment spray pump to be removed from service has been reflected in the ITS. This change in terminology does not alter operational restrictions and is administrative.	3.6.6 ACTION A	15.3.3.B.2.c

Table A – Administrative Changes
ITS Section 3.6 – Containment Systems

DOC No.	Description of Change	ITS Requirement	CTS Requirement
3.6.6 A8	The CTS provision allowing 72 hours to restore component inoperabilities associated with the containment spray pumps and accident fan cooler units provided redundant equipment is operable has been equivalently reflected in the presentation of the ITS. This change does not alter operational restrictions and is administrative.	3.6.6 ACTION A, 3.6.6 ACTION C	15.3.3.B.2.a, 15.3.3.B.2.b, 15.3.3.B.2.c
3.6.6 A9	The CTS provision allowing valves required by the containment spray pumps or containment coolers to be inoperable for up to 72 hours has been equivalently reflected in the ITS. This change does not alter operational restrictions and is administrative.	3.6.6 ACTIONS A and D	15.3.3.B.2.c
3.6.6 A10	The CTS requirement to shutdown the unit if one or two accident fan cooler units, or their associated valves, are inoperable in excess of 72 hours has been equivalently reflected in the ITS. This change does not alter operational restrictions and is administrative.	3.6.6 ACTION E, 3.6.6 Required Action E.1, 3.6.6 Required Action E.2	15.3.3.B.2
3.6.6 A11	The Bases have been completely replaced by revised Bases that reflect the format and applicable content of NUREG-1431.	3.6.6 Bases	Bases
3.6.7 A1	Editorial changes, reformatting, and revised numbering.	3.6.7, 3.6.7 ACTION A, 3.6.7 Required Action A.1, 3.6.7 ACTION C, 3.6.7 Required Action C.1, SR 3.6.7.1, SR 3.6.7.2	15.3.3, 15.3.3.B.1.a, 15.3.3.B.2, 15.3.3.B.2.c, 15.4.5.II.B.2
3.6.7 A2	Removes the introductory Applicability statement at the beginning of each CTS section. These statements simply state which systems/components are addressed within a given section, and are reflected in the ITS specification and section titles.	3.6.7 title	15.3.3 Applicability
3.6.7 A3	Removes the introductory Objective statement at the beginning of each CTS section. These statements were strictly informational and did not establish any regulatory requirements.	3.6.7 Bases	15.3.3 Objective
3.6.7 A4	CTS requirements for the Iodine Removal System have been equivalently reflected in the ITS as a requirement to be operable in Modes 1, 2, 3, and 4. This change does not alter operational restrictions and is administrative.	LCO 3.6.7, 3.6.7 Applicability	15.3.3.B.1
3.6.7 A5	Not used.	N/A	N/A
3.6.7 A6	The Bases have been completely replaced by revised Bases that reflect the format and applicable content of NUREG-1431.	3.6.7 Bases	Bases

Table A – Administrative Changes
ITS Section 3.6 – Containment Systems

DOC No.	Description of Change	ITS Requirement	CTS Requirement
3.6.7 A7	CTS requirements to perform a system actuation test of the spray additive tank outlet valves have been reflected in the ITS as a Surveillance Requirement. This change does not alter operational restrictions and is administrative.	SR 3.6.7.4	15.4.5.I.B.1
3.6.7 A8	CTS requirements for spray additive tank sodium hydroxide concentration have been equivalently reflected in the ITS as a Surveillance Requirement. This change does not alter operational restrictions and is administrative.	SR 3.6.7.3	15.3.3.B.1.a
3.6.7 A9	Not used.	N/A	N/A
3.6.7 A10	CTS requirements when spray additive tank level and NaOH concentration limits are not met have been equivalently reflected in the ITS. This change does not alter operational restrictions and is administrative.	3.6.7 ACTION B, 3.6.7 Required Action B.1, 3.6.7 ACTION C, 3.6.7 Required Action C.1, 3.6.7 Required Action C.2	15.3.0.B
3.6.8 NONE	NONE	NONE	NONE
3.6.9 NONE	NONE	NONE	NONE
3.6.10 NONE	NONE	NONE	NONE
3.6.11 NONE	NONE	NONE	NONE
3.6.12 NONE	NONE	NONE	NONE
3.6.13 NONE	NONE	NONE	NONE
3.6.14 NONE	NONE	NONE	NONE
3.6.15 NONE	NONE	NONE	NONE
3.6.16 NONE	NONE	NONE	NONE
3.6.17 NONE	NONE	NONE	NONE
3.6.18 NONE	NONE	NONE	NONE
3.6.19 NONE	NONE	NONE	NONE

Table L – Less Restrictive Changes
ITS Section 3.6 – Containment Systems

DOC No.	Description of Change	ITS Requirement	CTS Requirement	Change Type
3.6.1 L1	The ITS does not retain CTS requirements for containment integrity in operational conditions other than Modes 1, 2, 3, and 4.	3.6.1 Applicability	15.3.6.A.1, 15.3.6.C, 15.3.6.D, 15.3.6.D Note *, Bases	2
3.6.1 LB1	Not used.	N/A	N/A	N/A
3.6.2 L1	The ITS does not retain CTS requirements for containment integrity related to the containment airlocks in operational conditions other than Modes 1, 2, 3, and 4.	3.6.2 Applicability	15.3.6.A.1	2
3.6.3 L1	The ITS does not retain CTS requirements for isolation valve integrity as it relates to containment integrity in operational conditions other than Modes 1, 2, 3, and 4.	3.6.3 Applicability	15.1.g.3, 15.3.6.A.1, Table 15.4.1-2 Item 23 Note (9)	2
3.6.3 L2	The CTS requirement to isolate containment penetrations that are equipped with only one containment isolation valve and a closed system within four hours if that isolation valve becomes inoperable is relaxed under ITS to allow 72 hours.	3.6.3 Required Action C.1	15.3.6.A.1.b.2.(a)(1)	6
3.6.3 L3	The CTS provision allowing verification that isolation devices used to isolate penetration flowpaths are shut by administrative means in high radiation areas is broadened in the ITS to include other areas if the flowpath is isolated with a device that is locked, sealed or otherwise secured.	3.6.3 Required Action A.2 Note 2, 3.6.3 Required Action C.2 Note 2	15.3.6.A.1.b(1)(a)(ii), 15.3.6.A.1.b(1)(b)(ii), and 15.3.6.A.1.b(2)(a)(ii)	4

CHANGE TYPES

1. Relaxation of LCO Requirement
2. Relaxation of Applicability
3. Relaxation of Surveillance Requirement
4. Relaxation of Required Action
5. Relaxation of CTS Reporting Requirements
6. Relaxation of Completion Time
7. Deletion of Requirements Redundant to Regulations

Table L – Less Restrictive Changes
ITS Section 3.6 – Containment Systems

DOC No.	Description of Change	ITS Requirement	CTS Requirement	Change Type
3.6.3 L4	ITS adds a Condition and Required Action for one inoperable containment purge supply or exhaust valve in a penetration that are less restrictive than the plant shutdown requirements of CTS 15.3.0.B.	3.6.3 ACTION A, 3.6.3 Required Action A.1, 3.6.3 Required Action A.2, 3.6.3 ACTION B, 3.6.3 Required Action B.1	15.3.0.B	4, 6
3.6.4 L1	ITS increases the surveillance interval for performing the containment pressure verification by four hours, from "once per shift," to every 12 hours.	SR 3.6.4.1	Table 15.4.1-1 Item 27	3
3.6.5 NONE	NONE	NONE	NONE	NONE
3.6.6 L1	The CTS list of allowable concurrent inoperabilities for the containment pressure function is expanded under ITS to allow other combinations of concurrently inoperable components provided the assumptions of analysis assumptions are met.	3.6.6 ACTIONS	15.3.3.B.2	4
3.6.6 L2	The CTS requirement to place the unit in Cold Shutdown if the containment spray pumps or their associated valves and piping are not restored to operable status is extended by 48 hours under ITS to 84 hours.	3.6.6 Required Action B.2	15.3.3.B.2	6
3.6.6 L3	The CTS requirement to check the containment spray nozzles to ensure they are not obstructed at intervals not exceeding five years is relaxed to 10 years under ITS, which also includes the 25% surveillance interval extension of ITS SR 3.0.2.	SR 3.0.2, SR 3.6.6.9	15.4.5.I.B.3	3
3.6.6 L4	Details in the CTS specifying that the containment spray pumps will be tested by running them for 15 minutes are not necessary to describe the actual regulatory requirement, and have been deleted.	N/A	15.4.5.I.B.1, 15.4.5.I.B.2, 15.4.5.II.A.2	3

CHANGE TYPES

1. Relaxation of LCO Requirement
2. Relaxation of Applicability
3. Relaxation of Surveillance Requirement
4. Relaxation of Required Action
5. Relaxation of CTS Reporting Requirements
6. Relaxation of Completion Time
7. Deletion of Requirements Redundant to Regulations

Table L – Less Restrictive Changes
ITS Section 3.6 – Containment Systems

DOC No.	Description of Change	ITS Requirement	CTS Requirement	Change Type
3.6.6 L5	The CTS requirement that the Containment Spray System test be initiated by tripping the normal actuation instrumentation is expanded under ITS to allow either a simulated or an actual signal.	SR 3.6.6.5, SR 3.6.6.6	15.4.5.I.B.1	3
3.6.6 L6	Relaxes CTS requirement by only requiring position verification of manual, power operated and automatic ECCS valves "in the ECCS flowpath," for valves that are not locked, sealed, or otherwise secured in position.	SR 3.6.6.1	15.4.5.II.B.2	3
3.6.7 L1	The CTS provision allowing valve inoperabilities for the iodine removal system when the redundant function is operable is broadened under ITS to allow inoperability of the spray additive system with the containment fan coolers or a containment spray train.	3.6.6 ACTION A,	15.3.3.B.2, 15.3.3.B.2.c	4
3.6.7 L2	The CTS requirement to place the unit in Cold Shutdown (ITS Mode 5) if any valve in the Spray Additive System is not restored to operability, or if the Spray Additive System is inoperable for any reason other than an inoperable valve, is extended by 48 hours under ITS to 84 hours.	3.6.7 Required Action C.2	15.3.3.B.2	6
3.6.7 L3	The CTS requirement to perform a monthly spray additive tank concentration sample is relaxed under ITS to require this sample once every 184 days.	SR 3.6.7.3	Table 15.4.1-2 Item 5	3
3.6.7 L4	Details in the CTS specifying that the containment spray pump test will be performed with the isolation valves in the spray supply lines at the containment blocked are not necessary to describe the actual regulatory requirement, and have been deleted.	N/A	15.4.5.I.B.1, 15.4.5.I.B.2	3

CHANGE TYPES

1. Relaxation of LCO Requirement
2. Relaxation of Applicability
3. Relaxation of Surveillance Requirement
4. Relaxation of Required Action
5. Relaxation of CTS Reporting Requirements
6. Relaxation of Completion Time
7. Deletion of Requirements Redundant to Regulations

Table L – Less Restrictive Changes
ITS Section 3.6 – Containment Systems

DOC No.	Description of Change	ITS Requirement	CTS Requirement	Change Type
3.6.7 L5	CTS requires the Spray Additive System test to be initiated by tripping the normal actuation instrumentation. ITS SR 3.6.7.4 allows initiation by an actual or simulated signal. The proposed ITS is less restrictive because it allows either a simulated or an actual signal.	SR 3.6.7.4	15.4.5.I.B.1	3
3.6.7 L6	Relaxes CTS requirement by only requiring position verification of manual, power operated and automatic ECCS valves "in the ECCS flowpath," for valves that are not locked, sealed, or otherwise secured in position.	SR 3.6.7.1	15.4.5.II.B.2	3
3.6.8 NONE	NONE	NONE	NONE	NONE
3.6.9 NONE	NONE	NONE	NONE	NONE
3.6.10 NONE	NONE	NONE	NONE	NONE
3.6.11 NONE	NONE	NONE	NONE	NONE
3.6.12 NONE	NONE	NONE	NONE	NONE
3.6.13 NONE	NONE	NONE	NONE	NONE
3.6.14 NONE	NONE	NONE	NONE	NONE
3.6.15 NONE	NONE	NONE	NONE	NONE
3.6.16 NONE	NONE	NONE	NONE	NONE
3.6.17 NONE	NONE	NONE	NONE	NONE
3.6.18 NONE	NONE	NONE	NONE	NONE
3.6.19 NONE	NONE	NONE	NONE	NONE

CHANGE TYPES

1. Relaxation of LCO Requirement
2. Relaxation of Applicability
3. Relaxation of Surveillance Requirement
4. Relaxation of Required Action
5. Relaxation of CTS Reporting Requirements
6. Relaxation of Completion Time
7. Deletion of Requirements Redundant to Regulations

Table M – More Restrictive Changes
ITS Section 3.6 – Containment Systems

DOC No.		Description of Change	ITS Requirement	CTS Requirement
3.6.1	M1	The CTS provision allowing containment integrity to be impaired due to containment tendon failure for up to 72 hours before requiring the unit to be shutdown has been replaced under ITS with a requirement to restore the containment before requiring the unit to be shutdown.	3.6.1 ACTION A	15.3.6.E.1, 15.3.6.E.2
3.6.2	M1	The CTS requirement that the containment airlocks leakage limit complies with the overall Type B and C leakage limits specified in the current Containment Leakage Rate Testing Program has been replaced with a fixed leakage limit in the Containment Leakage Rate Monitoring Program.	SR 3.6.2.1, 5.5.15	15.4.4.I
3.6.2	M2	The ITS adds a Surveillance Requirement to verify that no more than one door and its associated equalization valve in the airlock can be opened at one time (verification of interlock operability).	SR 3.6.2.2	15.4.4.I
3.6.3	M1	ITS adds a specific frequency for the Surveillance Requirement to perform a functional test of the containment isolation trip function.	SR 3.6.3.5	Table 15.4.2-1 Item 13
3.6.3	M2	The ITS adds two new surveillances to verify closure of manual isolation valves and blank flanges.	SR 3.6.3.2, SR 3.6.3.2 Note, SR 3.6.3.3, SR 3.6.3.3 Note	15.4.2.B
3.6.4	M1	The Applicability for verification of containment pressure is specifically stated under ITS to be Modes 1, 2, 3, and 4.	3.6.4 Applicability	15.3.6.B.2.b
3.6.4	M2	The Applicability for containment pressure limits is specifically stated under ITS to be Modes 1, 2, 3, and 4.	LCO 3.6.4 Applicability	Table 15.4.1-1 Item 27
3.6.5	M1	Addition of an LCO and Required Actions for containment bulk average temperature.	LCO 3.6.5, 3.6.5 ACTION A, 3.6.5 Required Action A.1, 3.6.5 ACTION B, 3.6.5 Required Action B.1, 3.6.5 Required Action B.2, SR 3.6.5.1	N/A
3.6.6	M1	The CTS provision exempting the requirement to maintain the Containment Spray and Containment Fan Coolers operable during low power physics testing has been deleted.	N/A	15.3.3.B.1

Table M – More Restrictive Changes
ITS Section 3.6 – Containment Systems

DOC No.	Description of Change	ITS Requirement	CTS Requirement
3.6.6 M2	ITS adds a specific frequency for the Surveillance Requirement to perform a containment spray system test.	SR 3.6.6.5, SR 3.6.6.6	15.4.5.I.B.1
3.6.6 M3	ITS adds a specific frequency for the Surveillance Requirement to test each fan cooler and fan cooler service water outlet bypass valve and verify proper operation of the backdraft dampers and valves.	SR 3.6.6.5, SR 3.6.6.8	15.4.5.I.C.1
3.6.6 M4	ITS adds a Surveillance Requirement to verify the auto start capability from a safety injection signal of the containment cooler unit accident fans.	SR 3.6.6.7	N/A
3.6.6 M5	ITS adds a specific frequency for the Surveillance Requirement verify containment fan cooler service water flow rate.	SR 3.6.6.3	N/A
3.6.6 M6	The ITS adds a limit of 144 hours for the total time that LCO requirements for containment cooling are not met.	3.6.6 Required Action A.1, 3.6.6 Required Action C.1, 3.6.6 Required Action D.1	15.3.3.B.2.a, 15.3.3.B.2.b, 15.3.3.B.2.c
3.6.7 M1	The CTS provision exempting the requirement to maintain the Iodine Removal System operable during low power physics testing has been deleted.	N/A	15.3.3.B.1
3.6.7 M2	ITS adds an upper operational limits for spray additive tank concentration.	SR 3.7.6.3	15.3.3.B.1.a
3.6.7 M3	ITS adds a specific frequency for the Surveillance Requirement to perform a spray additive system test.	SR 3.7.6.4	15.4.5.I.B.1
3.6.7 M4	ITS adds a Surveillance Requirement to verify the level limit for the spray additive tank is met.	SR 3.7.6.2	15.3.3.B.1.a
3.6.8 NONE	NONE	NONE	NONE
3.6.9 NONE	NONE	NONE	NONE
3.6.10 NONE	NONE	NONE	NONE
3.6.11 NONE	NONE	NONE	NONE
3.6.12 NONE	NONE	NONE	NONE
3.6.13 NONE	NONE	NONE	NONE
3.6.14 NONE	NONE	NONE	NONE

Table M – More Restrictive Changes
ITS Section 3.6 – Containment Systems

DOC No.	Description of Change	ITS Requirement	CTS Requirement
3.6.15 NONE	NONE	NONE	NONE
3.6.16 NONE	NONE	NONE	NONE
3.6.17 NONE	NONE	NONE	NONE
3.6.18 NONE	NONE	NONE	NONE
3.6.19 NONE	NONE	NONE	NONE

Table R – Relocated Specifications and Removed Details
ITS Section 3.6 – Containment Systems

Doc No.	CTS Requirement	Description of Relocated Requirements	Location	Change Control Process	Change Type
3.6.1 LA1	15.1.D, 15.1.D Note *, 15.1.D.1, 15.1.D.1.a, 15.1.D.1.b, 15.1.D.1.c, 15.1.D.2, 15.1.D.3, 15.1.D.4, 15.1.D Note **	Aspects of the CTS definition of Containment Integrity.	Bases	Bases Control Program described in ITS 5.5.13.	1, 3
3.6.2 NONE	NONE	NONE	NONE	NONE	NONE
3.6.3 NONE	NONE	NONE	NONE	NONE	NONE
3.6.4 NONE	NONE	NONE	NONE	NONE	NONE
3.6.5 NONE	NONE	NONE	NONE	NONE	NONE
3.6.6 LA1	15.4.5.I.C.2	CTS acceptance criteria for containment fan cooler accident fan testing.	Bases	Bases Control Program described in ITS 5.5.13.	3
3.6.7 LA1	15.3.3.B.1.d	Specifics related to Operability of the Iodine Removal System.	Bases	Bases Control Program described in ITS 5.5.13.	3
3.6.8 NONE	NONE	NONE	NONE	NONE	NONE
3.6.9 NONE	NONE	NONE	NONE	NONE	NONE
3.6.10 NONE	NONE	NONE	NONE	NONE	NONE
3.6.11 NONE	NONE	NONE	NONE	NONE	NONE

CHANGE TYPES

1. Details of System Design and System Description including Design Limits
2. Description of System or Plant Operation
3. Procedural Details for Meeting TS Requirement and Relocated Reporting Requirements
4. Relocated Redundant Requirements

Table R – Relocated Specifications and Removed Details
ITS Section 3.6 – Containment Systems

Doc No.	CTS Requirement	Description of Relocated Requirements	Location	Change Control Process	Change Type
3.6.12 NONE	NONE	NONE	NONE	NONE	NONE
3.6.13 NONE	NONE	NONE	NONE	NONE	NONE
3.6.14 NONE	NONE	NONE	NONE	NONE	NONE
3.6.15 NONE	NONE	NONE	NONE	NONE	NONE
3.6.16 NONE	NONE	NONE	NONE	NONE	NONE
3.6.17 NONE	NONE	NONE	NONE	NONE	NONE
3.6.18 NONE	NONE	NONE	NONE	NONE	NONE
3.6.19 NONE	NONE	NONE	NONE	NONE	NONE

CHANGE TYPES

1. Details of System Design and System Description including Design Limits
2. Description of System or Plant Operation
3. Procedural Details for Meeting TS Requirement and Relocated Reporting Requirements
4. Relocated Redundant Requirements

Table A – Administrative Changes
ITS Section 3.7 – Plant Systems

DOC No.		Description of Change	ITS Requirement	CTS Requirement
3.7.1	A1	Editorial changes, reformatting, and revised numbering of CTS requirements for Main Steam Safety Valves (MSSVs).	3.7.1	15.3.4
3.7.1	A2	Removes the introductory Applicability statement at the beginning of each CTS section. These statements were strictly informational and did not establish any regulatory requirements.	3.7.1 title	15.3.4 Applicability
3.7.1	A3	Removes the introductory Objective statement at the beginning of each CTS section. These statements were strictly informational and did not establish any regulatory requirements.	3.7.1 Bases	15.3.4 Objective
3.7.1	A4	The Bases have been completely replaced by revised Bases that reflect the format and applicable content of NUREG-1431.	3.7.1 Bases	Bases
3.7.1	A5	The CTS requirement specifying the minimum number of main steam safety valves (MSSVs) has been reflected in the ITS as Tables specifying maximum power levels at which the unit can be operated based on the number of operable MSSVs and lift setpoints. This change does not alter any operational restrictions and is administrative.	3.7.1, Table 3.7.1-1, Table 3.7.1-2	15.3.4.A.1
3.7.1	A6	ITS allows MSSV setpoint testing to be performed after entry into Mode 3, but prior to entry into Mode 1 or 2, which is equivalent to the CTS Applicability for testing the MSSVs, which is whenever reactor coolant temperature is above 350 degrees with the reactor critical. This change does not alter any operational restrictions and is administrative.	SR 3.7.1.1 Note	15.3.4.A
3.7.2	A1	Editorial changes, reformatting, and revised numbering of CTS requirements for Main Steam Isolation Valves (MSIVs) and Non-Return Check Valves.	3.7.2, 3.7.3 ACTION B, 3.7.2 ACTION C, SR 3.7.2.1	15.3.4.D, 15.4.7, 15.4.7.A
3.7.2	A2	Removes the introductory Applicability statement at the beginning of each CTS section. These statements were strictly informational and did not establish any regulatory requirements.	3.7.2 title	15.3.4 Applicability
3.7.2	A3	Removes the introductory Objective statement at the beginning of each CTS section. These statements were strictly informational and did not establish any regulatory requirements.	3.7.2 Bases	15.3.4 Objective

Table A – Administrative Changes
ITS Section 3.7 – Plant Systems

DOC No.		Description of Change	ITS Requirement	CTS Requirement
3.7.2	A4	Replaces the CTS listing of unique component identifiers for the MSIVs and Non-Return Check Valves (e.g., MS 2017, 2018, 2017A and 2018A) with the noun name descriptions under ITS. This change is administrative.	3.7.2	15.3.4.D
3.7.2	A5	The CTS provision allowing the MSIVs and Non-Return Check Valves to be opened in the hot shutdown condition to perform operability testing if the valves were previously closed in accordance with CTS Actions has been retained through ITS LCO 3.0.5.	LCO 3.0.5	15.3.4.D
3.7.2	A6	The CTS requirement to perform closure timing of the MSIVs at 5% steam flow or less is reflected in the ITS as a Note to ITS SR 3.7.2.1 requiring MSIV stroke timing to be completed prior to entering ITS Mode 1. Additionally, the CTS closure time limit has been incorporated into ITS SR 3.7.2.1. As such, these changes do not alter any operational restrictions and are administrative.	SR 3.7.2.1 Note	15.4.7.A
3.7.2	A7	The Bases have been completely replaced by revised Bases that reflect the format and applicable content of NUREG-1431.	3.7.2 Bases	Bases
3.7.2	A8	The CTS requirement that the main steam non-return check valves be tested for operability has been retained in ITS SR 3.7.2.3 as a requirement to verify that the valves can close. This change is considered administrative since it continues to verify availability of the required safety function for these valves.	SR 3.7.2.3	15.4.7.B
3.7.3	A1	Editorial changes, reformatting, and revised numbering of CTS requirements for Main Feedwater Isolation.	SR 3.7.3.1, SR 3.7.3.2	Table 15.4.1-1 Items 17.1 and 17.2
3.7.3	A2	A Bases Section has been added which reflects the current licensing basis consistent with the format and applicable content of NUREG-1431.	3.7.3 Bases	Bases
3.7.4	A1	Editorial changes, reformatting, and revised numbering of CTS requirements for Atmospheric Dump Valve (ADV) Flowpaths.	3.7.4, 3.7.4 ACTION C, 3.7.4 Required Action C.1	15.3.4, 15.3.4.A.5
3.7.4	A2	Removes the introductory Applicability statement at the beginning of each CTS section. These statements were strictly informational and did not establish any regulatory requirements.	3.7.4 title	15.3.4 Applicability
3.7.4	A3	Removes the introductory Objective statement at the beginning of each CTS section. These statements were strictly informational and did not establish any regulatory requirements.	3.7.4 Bases	15.3.4 Objective

Table A – Administrative Changes
ITS Section 3.7 – Plant Systems

DOC No.		Description of Change	ITS Requirement	CTS Requirement
3.7.4	A4	The Bases have been completely replaced by revised Bases that reflect the format and applicable content of NUREG-1431.	3.7.4 Bases	Bases
3.7.4	A5	The CTS requirement that action must be initiated within 1 hour to place the affected unit in a condition where the ADV LCO does not apply when the ADVs associated with both steam generator flowpaths are simultaneously inoperable has been reflected in the ITS, consistent with the format and presentation of the STS.	3.7.4 ACTION B, 3.7.4 Required Action B.1	15.3.4.A.5
3.7.5	A1	Editorial changes, reformatting, and revised numbering of CTS requirements for the Auxiliary Feedwater (AFW) System.	3.7.5, 3.7.5 ACTION D, SR 3.7.5.5	15.3.4, 15.3.4.C, Table 15.4.1-1 Item 20 Note (20), 15.4.8
3.7.5	A2	Removes the introductory Applicability statement at the beginning of each CTS section. These statements were strictly informational and did not establish any regulatory requirements.	3.7.5 title	15.3.4 Applicability
3.7.5	A3	Removes the introductory Objective statement at the beginning of each CTS section. These statements were strictly informational and did not establish any regulatory requirements.	Bases	15.3.4 Objective
3.7.5	A4	The Bases have been completely replaced by revised Bases that reflect the format and applicable content of NUREG-1431.	Bases	Bases
3.7.5	A5	Not used.	N/A	N/A
3.7.5	A6	ITS contains specific usage rules for application of the Conditions and Required Actions associated with varying system inoperabilities consistent with the format and presentation of the STS. Accordingly, CTS guidance related to usage of Actions has not been retained in the ITS. This change is administrative.	N/A	15.3.4.C
3.7.5	A7	Reactor power related contingencies in the CTS frequency for testing of the turbine driven AFW pump, and completion of the AFW flow path verification have been equivalently presented in the ITS. These changes do not alter any operational restrictions and are administrative.	SR 3.7.5.2, SR 3.7.5.2 Note	Table 15.4.1-1 Item 20 Note (13), 15.4.8.1.A, 15.4.8.1.B
3.7.6	A1	Editorial changes, reformatting, and revised numbering of CTS requirements for the Condensate Storage Tank.	3.7.6, SR 3.7.6.1	15.3.4, 15.3.4.A.3

Table A – Administrative Changes
ITS Section 3.7 – Plant Systems

DOC No.	Description of Change	ITS Requirement	CTS Requirement
3.7.6 A2	Removes the introductory Applicability statement at the beginning of each CTS section. These statements were strictly informational and did not establish any regulatory requirements.	3.7.6 title	15.3.4 Applicability
3.7.6 A3	Removes the introductory Objective statement at the beginning of each CTS section. These statements were strictly informational and did not establish any regulatory requirements.	3.7.6 Bases	15.3.4 Objective
3.7.6 A4	The Bases have been completely replaced by revised Bases that reflect the format and applicable content of NUREG-1431.	3.7.6 Bases	Bases
3.7.7 A1	Editorial changes, reformatting, and revised numbering of CTS requirements for the Component Cooling Water (CC) System.	3.7.7, 3.7.7 ACTION A, 3.7.7 ACTION B, 3.7.7 ACTION C	15.3.3, 15.3.3.C.2, 15.3.3.C.2.a, 15.3.3.C.2.b
3.7.7 A2	Removes the introductory Applicability statement at the beginning of each CTS section. These statements were strictly informational and did not establish any regulatory requirements.	3.7.7 title	15.3.3 Applicability
3.7.7 A3	Removes the introductory Objective statement at the beginning of each CTS section. These statements were strictly informational and did not establish any regulatory requirements.	3.7.7 Bases	15.3.3 Objective
3.7.7 A4	The Bases have been completely replaced by revised Bases that reflect the format and applicable content of NUREG-1431.	3.7.7 Bases	Bases
3.7.7 A5	ITS contains specific usage rules for application of the Conditions and Required Actions associated with varying system inoperabilities consistent with the format and presentation of the STS. Accordingly, CTS guidance related to usage of Actions has not been retained in the ITS. This change is administrative.	N/A	15.3.3.C.2
3.7.7 A6	The implicitly stated CTS Applicability for the Component Cooling Water System has been equivalently reflected in the ITS as Modes 1, 2, 3, and 4. This change is considered administrative as it is consistent with current practice.	3.7.7 Applicability	15.3.3.C.1
3.7.8 A1	Editorial changes, reformatting, and revised numbering of CTS requirements for the Service Water (SW) System.	3.7.8	15.3.3.D

Table A – Administrative Changes
ITS Section 3.7 – Plant Systems

DOC No.	Description of Change	ITS Requirement	CTS Requirement
3.7.8 A2	Removes the introductory Applicability statement at the beginning of each CTS section. These statements were strictly informational and did not establish any regulatory requirements.	3.7.8 title	15.3.3.Applicability
3.7.8 A3	Removes the introductory Objective statement at the beginning of each CTS section. These statements were strictly informational and did not establish any regulatory requirements.	3.7.8 Bases	15.3.3 Objective
3.7.8 A4	The Bases have been completely replaced by revised Bases that reflect the format and applicable content of NUREG-1431.	3.7.8 Bases	Bases
3.7.8 A5	The implicitly stated CTS Applicability for the Service Water System has been equivalently reflected in the ITS as Modes 1, 2, 3, and 4. This change is considered administrative as it is consistent with current practice.	3.7.8 Applicability	15.3.3.D.1
3.7.8 A6 ~~open~~	The CTS requirement that valves and interlocks required for the functioning of the Service Water System be operable has been equivalently reflected in the ITS requirement that the Service Water System be operable with; six Service Water pumps, one continuous Service Ring Header, and the automatic non-essential-Service-Water-load isolation valves. This change does not alter any operational restrictions and is administrative. ~~*Open question about the isolation function of the ring header isolation valves, plus a Bases discussion of the turbine deck valves.*~~	LCO 3.7.8	15.3.3.D.1.a, 15.3.3.D.1.b
3.7.8 A7	ITS contains specific usage rules for application of the Conditions and Required Actions associated with varying system inoperabilities consistent with the format and presentation of the STS. Accordingly, CTS guidance related to usage of Actions has not been retained in the ITS. This change is administrative.	1.3 LCOs 3.0.1 and 3.0.2	15.3.3.D.2
3.7.8 A8	The CTS requirement that the unit be placed into hot shutdown (ITS Mode 3) within 6 hours and cold shutdown (ITS Mode 5) within 36 hours if the Actions for various system/component inoperabilities are not met has been reflected in ITS ACTION H. Also, in the event more than three SW pumps are inoperable, CTS 15.3.3.D.2.b would require a shut down in accordance with 15.3.0.B. ITS ACTION G in combination with ACTION H retain these action requirements.	3.7.8 ACTION G, 3.7.8 ACTION H,	15.3.3.D.2, 15.3.3.D.2.b, 15.3.0.B

DOC No.	Description of Change	ITS Requirement	CTS Requirement
3.7.8 A9	ITS replaces the CTS listing of acceptable SW System configurations when the ring header continuous flowpath is interrupted with a requirement to verify the SW System is capable of providing required cooling water flow to required equipment within 1 hour. This requirement is the same as the CTS requirement since it effectively limits system configurations to those that have been previously evaluated. Additionally, CTS requirements when Actions are not met have been reflected in the ITS. These changes are administrative.	3.7.8 ACTION C,	15.3.3.D.2.b
3.7.8 A10	CTS provisions for restoration of inoperable non-essential Service Water valves if the required redundant automatic isolation valve is operable, and allowing the Action to be exited if the affected flowpath(s) is either isolated or the affected valve is restored to operable status have been equivalently reflected in ITS ACTION D. Also, in the event both automatic isolation valves in an affected line are inoperable, CTS 15.3.3.D.2.b would require a shut down in accordance with 15.3.0.B. ITS ACTION E in combination with ACTION H retain these action requirements. Additionally, a Note allowing separate condition entry for each inoperable non-essential-SW-load flowpath has been added. This Note was not necessary or provided in the CTS since there are no restrictions on Condition entry similar to those of ITS Specification 1.3 in the CTS. This change is administrative since it provides clarification consistent with current practice.	3.7.8 ACTION D, 3.7.8 ACTION D Note, 3.7.8 ACTION E, 3.7.8 ACTION H	15.3.3.D.2.c, 15.3.3.D.2.b, 15.3.0.B
3.7.8 A11	ITS replaces the CTS listing of acceptable SW System configurations when an opposite unit containment fan cooler Service Water outlet valve is open with a requirement to verify the SW System is capable of providing required cooling water flow to required equipment within 1 hour. This requirement is equivalent to the CTS action requirement since it effectively limits system configurations to those that have been previously evaluated. Additionally, CTS requirements when actions are not met have been reflected in ITS ACTION H. These changes are administrative.	3.7.8 ACTION F, 3.7.8 ACTION H	15.3.3.D.2.d, 15.3.3.D.2
3.7.8 A12	CTS provisions allowing Actions to be exited if compensatory measures are taken have been reflected in the ITS ~~by~~ by providing compliance with the LCO, if the affected SW flowpath(s) is isolated.~~allowing separate Condition entry for simultaneously inoperable components.~~ Additionally, the CTS provision allowing Actions to be exited if the affected equipment is returned to operable status have been adopted through the ITS usage rules. These changes do not alter any operational restrictions and are administrative.	LCO 3.7.8.c ~~ACTION D~~, LCO 3.7.8.d ~~ACTION F~~, 1.3	15.3.3.D.2.c, 15.3.3.D.2.d

Table A – Administrative Changes
ITS Section 3.7 – Plant Systems

DOC No.	Description of Change	ITS Requirement	CTS Requirement
3.7.9 NONE	NONE	NONE	NONE
3.7.10 A1	Editorial changes, reformatting, and revised numbering of CTS requirements for the Control Room Emergency Filtration System (CREFS).	LCO 3.7.9 3.7.9 Applicability, SR 3.7.9.2	15.3.12, 15.3.12.2.a, 15.3.12.2.b, 15.4.11, 15.4.11.1
3.7.10 A2	Removes the introductory Applicability statement at the beginning of each CTS section. These statements were strictly informational and did not establish any regulatory requirements.	3.7.9 title	15.3.12 Applicability, 15.4.11 Applicability
3.7.10 A3	Removes the introductory Objective statement at the beginning of each CTS section. These statements were strictly informational and did not establish any regulatory requirements.	3.7.9 Bases	15.3.12 Objective, 15.4.11 Objective
3.7.10 A4	The Bases have been completely replaced by revised Bases that reflect the format and applicable content of NUREG-1431.	3.7.9 Bases	Bases
3.7.10 A5	The implicitly stated CTS Applicability for the control room emergency filtration system has been equivalently reflected in the ITS as Modes 1, 2, 3, and 4. This change is considered administrative as it is consistent with current practice. Additionally, the CTS requirement that the control room emergency filtration system be operable during refueling operations has been retained in the ITS. These changes do not alter operational restrictions and are administrative.	3.7.9 Applicability	15.3.12.1
3.7.10 A6	ITS contains specific usage rules for application of the Conditions and Required Actions associated with varying system inoperabilities consistent with the format and presentation of the STS. Accordingly, CTS guidance related to usage of Actions has not been retained in the ITS. This change is administrative.	1.3, 3.0	15.3.12.1
3.7.10 A7	Details of the required testing and associated frequencies for the control room emergency filtration system HEPA filter and charcoal adsorbers have been moved to ITS 5.5.11, "Ventilation Filter Testing Program (VFTP)." This change does not alter operational restrictions, and is administrative, because the explicit requirement for the surveillance testing is retained in ITS SR 3.7.9.2.	SR 3.7.9.2	15.4.11.1, 15.4.11.4

Table A – Administrative Changes
ITS Section 3.7 – Plant Systems

DOC No.	Description of Change	ITS Requirement	CTS Requirement
3.7.10 A8	The CTS requirement that the control room emergency filtration system fans be tested following fan maintenance or repair has not been explicitly retained in the ITS since it is duplicative of requirements imposed through application of ITS SR 3.0.1 and SR ITS 3.0.2. This change does not alter operational restrictions, and is administrative.	SR 3.0.1 and SR 3.0.2	15.4.11.4.e
3.7.10 A9	The CTS requirement to test automatic actuation of the control room emergency filtration system has been equivalently reflected as Surveillance Requirements in the ITS, making this change administrative.	SR 3.7.9.3, SR 3.7.9.4	15.4.11.2
3.7.10 A10	The CTS requirements allowing reactor and refueling operations to continue for up to seven days with the control room emergency filtration system inoperable before requiring the unit(s) to be placed in Cold Shutdown, and termination of refueling operations as soon as practicable have been retained in the ITS, making this change administrative.	3.7.9 ACTION A, 3.7.9 ACTION A.1, 3.7.9 ACTION B	15.3.12.3, 15.3.12.4
3.7.11NONE	NONE	NONE	NONE
3.7.12NONE	NONE	NONE	NONE
3.7.13NONE	NONE	NONE	NONE
3.7.14NONE	NONE	NONE	NONE
3.7.15 A1	Editorial changes, reformatting, and revised numbering of CTS requirements for the Fuel Storage Pool Water Level.	SR 3.7.10.1	Table 15.4.1-2 Item 7.b)
3.7.15 A2	A Bases Section has been added which reflects the current licensing basis consistent with the format and applicable content of NUREG-1431.	3.7.10 Bases	N/A
3.7.16 A1	Editorial changes, reformatting, and revised numbering of CTS requirements for Fuel Storage Pool Boron Concentration.	3.7.11	15.4.1.B Table 15.4.1-2 Item 7.a) 15.5.4.3
3.7.16 A2	Removes the introductory Applicability statement at the beginning of each CTS section. These statements were strictly informational and did not establish any regulatory requirements.	3.7.11 title	15.4.4 Applicability
3.7.16 A3	Removes the introductory Objective statement at the beginning of each CTS section. These statements were strictly informational and did not establish any regulatory requirements.	3.7.11 Bases	15.4.4 Objective

Table A – Administrative Changes
ITS Section 3.7 – Plant Systems

DOC No.	Description of Change	ITS Requirement	CTS Requirement
3.7.16 A4	A Bases Section has been added which reflects the current licensing basis consistent with the format and applicable content of NUREG-1431.	3.7.11 Bases	N/A
3.7.16 A5	CTS requirements for minimum spent fuel storage pool boron concentration have been equivalently reflected in the ITS. This change does not alter operational restrictions, and is administrative.	3.7.11, SR 3.7.11.1	15.5.4.3
3.7.17 A1	Editorial changes, reformatting, and revised numbering of CTS requirements for Spent Fuel Pool Storage.	3.7.12	15.5.4.2
3.7.17 A2	Removes the introductory Applicability statement at the beginning of each CTS section. These statements were strictly informational and did not establish any regulatory requirements.	3.7.12 title	15.5.4 Applicability
3.7.17 A3	Removes the introductory Objective statement at the beginning of each CTS section. These statements were strictly informational and did not establish any regulatory requirements.	3.7.12 Bases	15.5.4 Objective
3.7.17 A4	CTS limits for fuel assemblies stored in the spent fuel pool storage pool have been equivalently reflected in the ITS. This change does not alter operational restrictions, and is administrative.	3.7.12, Figure 3.7.12-1, SR 3.7.12.1	15.5.4.2, Figure 15.5.4-1
3.7.17 A5	CTS establishes an implied Applicability for Spent Fuel Pool Storage that is equivalently reflected in the ITS. This change does not alter operational restrictions, and is administrative.	3.7.12 Applicability	15.5.4.2
3.7.17 A6	A Bases Section has been added which reflects the current licensing basis consistent with the format and applicable content of NUREG-1431.	3.7.12 Bases	N/A
3.7.18 A1	Editorial changes, reformatting, and revised numbering of CTS requirements for Secondary Specific Activity.	3.7.13	15.3.4.B
3.7.18 A2	The Bases have been completely replaced by revised Bases that reflect the format and applicable content of NUREG-1431.	3.7.13 Bases	Bases

Table L – Less Restrictive Changes
ITS Section 3.7 – Plant Systems

DOC No.	Description of Change	ITS Requirement	CTS Requirement	Change Type
3.7.1 L1	The ITS adds Actions to address inoperability of MSSVs that are less restrictive than the plant shutdown requirements of CTS 15.3.0.B when two or fewer MSSVs are inoperable on one or both steam generators.	3.7.1 ACTIONS Note, 3.7.1 ACTIONS A, B, and C, Table 3.7.1-1	15.3.4.A.1, 15.3.0.B	4, 6
3.7.1 LB1	Details in the CTS specifying the number and scheduling of MSSVs to be tested each refueling outage, and that additional MSSVs be tested based on setpoint testing failures are duplicative of the requirements of ASME Section XI and ASME/ANSI OM-1, 1981, and have been deleted.	SR 3.7.1.1	Table 15.4.1-2 Item 12 Note (11)	7
3.7.2 L1	ITS adds provisions to allow both the MSIV and non-return check valve for a steam generator to be simultaneously inoperable, expands the time allowed for these valves to be inoperable before requiring unit shutdown, adds a Completion Time to reach Mode 2, allows indefinite operation in Mode 2 if the MSIV is deactivated and the non-return check valve in the affected flowpath is closed, and extends the time allowed to reach Mode 3 from ten to twenty-eight hours.	3.7.2 ACTIONS A, B, C, and D	15.3.4.D	4, 6
3.7.2 LB1	Details in the CTS specifying that main steam stop valves are to be tested each refueling outage are duplicative of the requirements of ASME Section XI and ASME/ANSI OM-1, 1981, and have been deleted.	SR 3.7.2.1	15.4.7.A	7
3.7.2 LB2	Not used.	N/A	N/A	N/A
3.7.3 NONE	NONE	NONE	NONE	NONE
3.7.4 L1	ITS establishes an Applicability for the ADVs of Modes 1, 2, 3, and Mode 4 when the Steam Generators are relied upon for heat removal that is less restrictive than the implicitly stated CTS applicability of ITS Modes 1, 2, 3, and 4.	3.7.4 Applicability 3.7.4 Required Action C.2	15.3.4.A, 15.3.4.A.5	2

CHANGE TYPES

1. Relaxation of LCO Requirement
2. Relaxation of Applicability
3. Relaxation of Surveillance Requirement
4. Relaxation of Required Action
5. Relaxation of CTS Reporting Requirements
6. Relaxation of Completion Time
7. Deletion of Requirements Redundant to Regulations

Table L – Less Restrictive Changes
ITS Section 3.7 – Plant Systems

DOC No.	Description of Change	ITS Requirement	CTS Requirement	Change Type
3.7.4 L2	ITS increases the time allowed to restore one inoperable ADV from 24 hours to 7 days.	3.7.4 ACTION A	15.3.4.A.5	6
3.7.4 L3	ITS relaxes the CTS requirement that prevents taking the reactor critical when the reactor coolant heated above 350 degrees F and an ADV flowpath is inoperable by allowing entry into Modes 1, 2 and 3, and Mode 4 when the steam generators are relied upon for heat removal with an ADV flowpath inoperable.	3.7.4 Required Action A.1 Note	15.3.4.A.5	1
3.7.4 LB1	Details in the CTS related to quarterly cycling the Steam Generator Atmospheric Dump Valves (ADVs) are duplicative of the requirements of ASME Section XI and 10 CFR 50.55a and have been deleted.	IST Program	Table 15.4.1-2 Item 28	7
3.7.5 L1	The ITS adds Actions to address inoperability of auxiliary feedwater system components that could render an auxiliary feedwater pump inoperable which are less restrictive than the plant shutdown requirements of CTS 15.3.0.B.	3.7.5 ACTIONS B and C	15.3.4.C 15.3.0.B	4
3.7.5 L2	ITS action requirements add an allowance for an inoperable turbine driven AFW pump on each unit simultaneously during two unit operation for up to 7 days each for an inoperable turbine steam supply line, and 72 hours each if inoperable for other reasons, before requiring the affected units to be placed into Mode 3 within 6 hours and Mode 4 within 18 hours. This is less restrictive than the plant shutdown Completion Time requirements of CTS 15.3.0.B which would apply if both turbine driven AFW pumps were inoperable during two unit operation.	3.7.5 ACTIONS A and B	15.3.4.C.1 15.3.0.B	6
3.7.5 L3	ITS increases the CTS Completion Time for restoring to operable status a single inoperable AFW pump steam supply line from 72 hours to up to 7 days before requiring a unit shutdown	3.7.5 ACTION A	15.3.4.C	6

CHANGE TYPES

1. Relaxation of LCO Requirement
2. Relaxation of Applicability
3. Relaxation of Surveillance Requirement
4. Relaxation of Required Action
5. Relaxation of CTS Reporting Requirements
6. Relaxation of Completion Time
7. Deletion of Requirements Redundant to Regulations

Table L – Less Restrictive Changes
ITS Section 3.7 – Plant Systems

DOC No.	Description of Change	ITS Requirement	CTS Requirement	Change Type
3.7.5 L4	The CTS requirement for plant shutdown under LCO 15.3.0.B when all AFW pump systems are inoperable is replaced with a requirement to immediately initiate action to restore an AFW pump system under ITS.	3.7.5 ACTION E	15.3.0.B	4
3.7.5 L5	Not used.	N/A	N/A	N/A
3.7.5 L6	ITS adds a provision that did not exist in the CTS allowing staggered unit shutdowns in the event that two AFW pump systems are concurrently out of service on both units during dual unit operation or a Required Action and associated Completion Time in ACTIONS A, B, or C are not met.	3.7.5 Required Action D.1 Note	15.3.4.C.1	4, 6
3.7.5 L7	ITS adds a provision that allows indefinite extension to the 37 hour CTS Completion Time for entry into MODE 4 for the Actions Conditions of two inoperable AFW pump systems, or a Required Action and associated Completion Time in ACTIONS A, B, or C not met. The extension applies as long as no motor driven AFW pump systems are operable.	3.7.5 Required Action D.2 Note	15.3.4.C.1	4, 6
3.7.5 LB1	Details in the CTS related to quarterly testing of the auxiliary feedwater pump discharge valves and service water suction supply valves by operator action are duplicative of the requirements of ASME Section XI and 10 CFR 50.55a and have been deleted.	N/A	15.4.8.1.C	7
3.7.5 LB2	Details in the CTS Bases related to demonstration of "the ability to both open and shut the turbine driven AFW pump motor-operated steam admission valves" are duplicative of the requirements of ASME Section XI and 10 CFR 50.55a and have been deleted.	N/A	Bases	7
3.7.5 LB3	Details in the CTS related to the acceptance criteria for AFW pump and valve operability tests are duplicative of the requirements of ASME Section XI, the PBNP IST Program, and 10 CFR 50.55a and have been deleted.	N/A	15.4.8.2	7

CHANGE TYPES

1. Relaxation of LCO Requirement
2. Relaxation of Applicability
3. Relaxation of Surveillance Requirement
4. Relaxation of Required Action
5. Relaxation of CTS Reporting Requirements
6. Relaxation of Completion Time
7. Deletion of Requirements Redundant to Regulations

Table L – Less Restrictive Changes
ITS Section 3.7 – Plant Systems

DOC No.	Description of Change	ITS Requirement	CTS Requirement	Change Type
3.7.6 L1	The ITS adds Actions to address inoperability of the CST that are less restrictive than the plant shutdown requirements of CTS 15.3.0.B, and which will allow 7 days to restore an inoperable CST to operable status before requiring actions to shutdown the unit.	3.7.6 ACTIONS A and B	15.3.0.B	4, 6
3.7.6 L2	ITS increases the surveillance interval for performing a CHANNEL CHECK of condensate storage tank (CST) level by four hours, from "once per shift," to every 12 hours.	SR 3.7.6.1	Table 15.4.1-1 Item 24 and Note (1)	3
3.7.7 NONE	NONE	NONE	NONE	NONE
3.7.8 NONE	NONE	NONE	NONE	NONE
3.7.9 NONE	NONE	NONE	NONE	NONE
3.7.10 L1	The surveillance frequency for control room emergency filtration system fan testing is relaxed from the CTS frequency of once per year to every 18 months under ITS.	SR 3.7.9.6	15.3.12.2.c, 15.4.11.4.e	3
3.7.10 L2	ITS increases the surveillance interval for testing the control room emergency filtration system fans from after 720 hours of operation since the previous test, to every 18 months.	SR 3.7.9.6	15.4.11.4.e	3
3.7.10 L3	ITS increases the surveillance interval for testing the control room emergency filtration automatic initiation function from once per year, to every 18 months.	SR 3.7.9.3 SR 3.7.9.4	15.4.11.2	3
3.7.10 L4	Not used.	N/A	N/A	N/A

CHANGE TYPES

1. Relaxation of LCO Requirement
2. Relaxation of Applicability
3. Relaxation of Surveillance Requirement
4. Relaxation of Required Action
5. Relaxation of CTS Reporting Requirements
6. Relaxation of Completion Time
7. Deletion of Requirements Redundant to Regulations

Table L – Less Restrictive Changes
ITS Section 3.7 – Plant Systems

DOC No.	Description of Change	ITS Requirement	CTS Requirement	Change Type
3.7.10 L5	ITS decreases the CTS requirement to operate the control room emergency filtration unit at least 10 hours every month by requiring that the control room emergency make-up filter unit be operated at least 15 minutes every 31 days.	SR 3.7.9.1	15.4.11.3	3
3.7.10 L6	The ITS Applicability for the CREFS is relaxed under ITS, as a result of a difference between the CTS definition of Refueling Operations and the ITS definition of Core Alterations, to exclude the movement within containment of components other than irradiated fuel.	3.7.9 Applicability	15.3.12.1	2
3.7.11 NONE	NONE	NONE	NONE	NONE
3.7.12 NONE	NONE	NONE	NONE	NONE
3.7.13 NONE	NONE	NONE	NONE	NONE
3.7.14 NONE	NONE	NONE	NONE	NONE
3.7.15 NONE	NONE	NONE	NONE	NONE
3.7.16 NONE	NONE	NONE	NONE	NONE
3.7.17 NONE	NONE	NONE	NONE	NONE
3.7.18 L1	The ITS adds an LCO, Applicability, and Actions to address secondary system dose equivalent iodine-131 activity that are less restrictive than the implicitly stated CTS Applicability and plant the shutdown requirements of CTS 15.3.0.B when secondary activity limit is exceeded.	3.7.13	15.3.1.D.8, 15.3.0.B, 15.3.4.B, 15.4.1.B, Table 15.4.1-2 Item 8 and Note (6)	2, 4, 6

CHANGE TYPES

1. Relaxation of LCO Requirement
2. Relaxation of Applicability
3. Relaxation of Surveillance Requirement
4. Relaxation of Required Action
5. Relaxation of CTS Reporting Requirements
6. Relaxation of Completion Time
7. Deletion of Requirements Redundant to Regulations

Table L – Less Restrictive Changes
ITS Section 3.7 – Plant Systems

DOC No.	Description of Change	ITS Requirement	CTS Requirement	Change Type
3.7.18 L2	The CTS requirement to verify secondary system dose equivalent iodine-131 is within limits once every week is relaxed to once every 31 days.	SR 3.7.13.1	15.3.1.D.8 Table 15.4.1-2 Item 8	3
3.7.18 L3	The CTS requirement that secondary coolant gross radioactivity to be monitored continuously by an air ejector gas monitor has not been retained in the ITS.	SR 3.7.13.1	15.3.1.D.8	3

CHANGE TYPES

1. Relaxation of LCO Requirement
2. Relaxation of Applicability
3. Relaxation of Surveillance Requirement
4. Relaxation of Required Action
5. Relaxation of CTS Reporting Requirements
6. Relaxation of Completion Time
7. Deletion of Requirements Redundant to Regulations

Table M – More Restrictive Changes
ITS Section 3.7 – Plant Systems

DOC No.		Description of Change	ITS Requirement	CTS Requirement
3.7.1	M1	The low power physics testing exception provided in the CTS applicability for the main steam safety valves for has not been retained in the ITS.	3.7.1 Applicability 3.7.1 ACTION C	15.3.4.A, 15.3.4.A.1, N/A
3.7.1	M2	Addition of a Table in the ITS providing setpoints and tolerances for the main steam safety valves at the component identifier level.	SR 3.7.1.1, Table 3.7.1-2	Table 15.4.1-2 Item 12N/A
3.7.2	M1	Increases the CTS applicability for the MSIVs and non-return check valves from anytime reactor coolant temperature is greater than or equal to 540 degrees F, to ITS Modes 1, 2, and 3.	3.7.2 Applicability	15.3.4.DN/A
3.7.2	M2	Addition of a requirement to have administrative controls for closure of the affected valve(s) when using the CTS allowance to open an inoperable MSIV or non-return check valve to ~~to~~ cooldown of the affected unit from the hot shutdown condition.	3.7.2 ACTION C Note	15.3.4.D
3.7.2	M3	ITS adds a specific 18-month frequency for the surveillance requirement to functionally test the MSIVs. Additionally, a SR note has been added stating that this surveillance is only required to be performed in MODE 1. This is more restrictive than the existing requirement that allowed testing to be delayed until steam flow was as much as 5%.	SR 3.7.2.2 Note and Frequency	Table 15.4.1-2 Item 13
3.7.2	M4	The CTS provision allowing continued operation in hot shutdown with an inoperable MSIV or non-return check valve provided that the inoperable valve is closed is expanded under ITS to also require the MSIV in the affected flowpath to be closed and de-activated and that the non-return check valve in the affected flowpath be in the closed position.	3.7.2 Required Actions C.1 and C.3	15.3.4.DN/A
3.7.2	M5	In Modes 2 and 3, ITS adds an 8 hour completion time to the CTS action to isolate an inoperable MSIV or non-return check valve, and adds a requirement to verify that the MSIV and non-return check valve are closed and the MSIV deactivated once every seven days as a condition for allowing the unit to remain in Mode 2 or 3.	3.7.2 Required Actions C.1, C.2, and C.3	15.3.4.D
3.7.3	M1	Addition of an LCO and Required Actions for main feedwater isolation.	LCO 3.7.3, 3.7.3 Applicability 3.7.3 ACTIONS A, B, C, and D	Table 15.4.1-1 Items 17.1 and 17.2N/A
3.7.3	M2	Addition of the Containment Pressure Condensate Isolation (CPCI) circuit to the ITS and establishment of a requirement to perform an 18 month test of the CPCI circuit, and explicit action requirements for one or more inoperable pump trip circuits, including CPCI.	SR 3.7.3.3 ACTIONS B, C and D	N/A

Table M – More Restrictive Changes
ITS Section 3.7 – Plant Systems

DOC No.		Description of Change	ITS Requirement	CTS Requirement
3.7.3	M3	Addition of LCO requirements in the ITS for the Containment Pressure Condensate Isolation (CPCI) main feedwater isolation circuits.	LCO 3.7.3	N/A
3.7.3	M4	Addition of a provision in the ITS allowing continued operation after the affected component is placed into its required position provided the affected component is periodically verified to be in its required position.	3.7.3 Required Actions A.2 and B.2	N/A
3.7.4	M1	Addition of requirements to verify that the ADVs and their associated block valves are capable of being locally operated.	SR 3.7.4.1, SR 3.7.4.2	N/A
3.7.5	M1	The time intervals specified in CTS to place the unit in hot shutdown if a motor driven or turbine driven auxiliary feedwater (AFW) pump is not restored to operable status within the specified time are reduced. The ITS will require the unit to be placed into Mode 3 within 6 hours and Mode 4 within 18 hours.	3.7.5 ACTION D	15.3.4.C, 15.3.4.C.2
3.7.5	M2	Addition of an action requirement for the ACTIONS Condition of two or more inoperable AFW pump systems in place of CTS 15.3.0.B. As such, the ITS reduces the time frame to achieve Mode 3 from 7 hours to 6 hours, and provides a specific time frame of 18 hours to reach Mode 4.	3.7.5 ACTION D	15.3.0.B, 15.3.4.C.2
3.7.5	M3	ITS adds a 10 day time limit on the maximum time the LCO may be not met as a result of entering multiple overlapping ACTIONS Conditions.	3.7.5 ACTIONS A, B, and C	15.3.4.C.2
3.7.5	M4	The ITS adds three new surveillances to verify alignment, automatic pump start, and automatic valve realignment capabilities in support of AFW system operability.	SR 3.7.5.1, SR 3.7.5.3, and SR 3.7.5.4	N/A
3.7.5	M5	CTS requirements for auxiliary feedwater (AFW) system operability are expanded under ITS to also require operability of the motor driven AFW pumps associated with steam generators required for decay heat removal in ITS Mode 4.	3.7.5, LCO 3.7.5 Note, 3.7.5 ACTION F	N/A
3.7.5	M6	The CTS requirement to periodically test the motor and turbine driven auxiliary feedwater (AFW) pumps is expanded under ITS to require verification that the AFW pumps will develop the required head at the flow test point.	SR 3.7.5.2	15.4.8.1.a

Table M – More Restrictive Changes
ITS Section 3.7 – Plant Systems

DOC No.	Description of Change	ITS Requirement	CTS Requirement
3.7.6 M1	CTS requirements for condensate storage tank (CST) system operability are expanded under ITS to also require operability of the CST in Mode 4 when the steam generators are required for decay heat removal. Additionally, in the event the CST is inoperable and is not restored to operable status in the 7 days specified by ITS Action A (see DOC L1), the time frame to achieve Mode 3 is reduced from the 7 hours required by CTS 15.3.0.B to 6 hours, and a specific time frame of 18 hours is provided to reach Mode 4.	3.7.6 Applicability 3.7.6 ACTION B	15.3.4.A.3 15.3.0.B
3.7.6 M2	CTS requirements to perform a CHANNEL CHECK of condensate storage tank (CST) level are expanded under ITS to also require this check in ITS MODE 4 when the steam generators are required for decay heat removal.	SR 3.7.6.1	Table 15.4.1-1 Item 24
3.7.7 M1	Not used.	N/A	N/A
3.7.7 M2	Establishment of specific time limits under ITS for achieving Mode 3 and Mode 5 if the CC system is not restored to operable status within 72 hours, while deleting the CTS provision allowing the unit to remain in hot shutdown for 48 hours.	3.7.7 ACTION C	15.3.3.C.2
3.7.7 M3	The ITS adds a surveillance to provide assurance that the required safety related flow paths are capable of providing cooling water flow.	SR 3.7.7.1, SR 3.7.7.1 Note	N/A
3.7.7 M4	ITS adds a Completion Time limit requiring restoration of LCO compliance within 144 hours of the first component becoming inoperable that is not specified in the CTS.	3.7.7 ACTIONS A and B	15.3.3.C.2.a, 15.3.3.C.2.b
3.7.7 M5	Addition of an ACTIONS Note to explicitly require entering applicable Conditions and Required Actions of LCO 3.4.6, "RCS Loops – Mode 4" for residual heat removal loops made inoperable by inoperable CC system components. This would include a condition of both CC pumps and/or both CC heat exchangers inoperable in Mode 4. Such a situation would require suspension of all operations involving a reduction of RCS boron concentration, and initiation of actions to restore one RHR loop to operable status and operation, consistent with CTS.	3.7.7 ACTIONS Note LCO 3.0.3 3.4.6 ACTION C	15.3.0.B 15.3.1.A.3.a.(3) 15.3.3.C.2
3.7.8 M1	ITS adds a Completion Time limit requiring restoration of LCO compliance within 14 days of the first component becoming inoperable. This limitation is not addressed in the CTS.	3.7.8 Required Actions A.1, C.2, D.2, and F.2	15.3.3.D.2.a, 15.3.3.D.2.b, 15.3.3.D.2.c, 15.3.3.D.2.d
3.7.8 M2	Not used.	N/A	N/A

Table M – More Restrictive Changes
ITS Section 3.7 – Plant Systems

DOC No.	Description of Change	ITS Requirement	CTS Requirement
3.7.8 M3	Addition of three ITS Surveillance Requirement to verify (1) that manual, power operated, and automatic valves servicing safety related equipment which are not locked, sealed, or otherwise secured in position are in their required positions; (2) that each Service Water automatic non-essential-SW-load isolation valve that is not locked, sealed, or otherwise secured in the closed position, actuates to the closed position on an actual or simulated actuation signal; and (3) that each Service Water Pump will start automatically on an actual or simulated actuation signal.	SR 3.7.8.1, SR 3.7.8.1 Note, SR 3.7.8.2, SR 3.7.8.3	Table 15.4.1-2 Item 15
3.7.9 NONE	NONE	NONE	NONE
3.7.10 M1	Addition of a surveillance requirement to verify the capability of the emergency make-up fans to maintain a positive pressure in the control room of at least 0.125 inches of water, when the control room ventilation system is operating in the emergency make-up mode.	SR 3.7.9.6	15.3.12.2.c
3.7.10 M2	The ITS establishes an additional requirement to place the unit in Mode 3 within 6 hours if the control room emergency filtration system is not restored to operable status.	3.7.9 Required Action B.3	15.3.12.4
3.7.10 M3	Addition of a surveillance requirement to verify the manual start and alignment capabilities of the control room emergency ventilation system.	SR 3.7.9.5	N/A
3.7.11 NONE	NONE	NONE	NONE
3.7.12 NONE	NONE	NONE	NONE
3.7.13 NONE	NONE	NONE	NONE
3.7.14 NONE	NONE	NONE	NONE
3.7.15 M1	Addition of an LCO, Applicability, and Required Actions, for spent fuel pool water level to complement the existing requirement to periodically verify spent fuel pool water level.	LCO 3.7.10, 3.7.10 Applicability 3.7.10 ACTIONS	N/A
3.7.16 M1	Addition of action requirements to address the situation where boron concentration requirements for the spent fuel pool are not met by suspending movement of fuel assemblies and requiring immediate action to restore the boron concentration in the fuel storage pool within limits.	3.7.11 ACTION A	N/A

Table M – More Restrictive Changes
ITS Section 3.7 – Plant Systems

DOC No.	Description of Change	ITS Requirement	CTS Requirement
3.7.16 M2	Increases the CTS frequency for verification of spent fuel boron concentration from once every month to once every 7 days.	SR 3.7.11.1	Table 15.4.1-2 Item 7.a)
3.7.17 M1	Addition of ITS Actions to address the situation where fuel storage requirements for the spent fuel pool are not met requiring immediate action to restore fuel storage limits.	3.7.12 ACTION A	N/A
3.7.17 M2	Not used.	N/A	N/A
3.7.18 M1	Adoption of the SRP methodology for calculating offsite radiological consequences of a main steam line break.	3.7.13 Bases	Bases
3.7.18 M2	Addition of action requirements for secondary coolant activity that will direct the unit to be placed in Modes 3 and 5 within a shorter time frame than under CTS.	3.7.13 ACTION A	15.3.0.B

Table R – Relocated Specifications and Removed Details
ITS Section 3.7 – Plant Systems

Doc No.	CTS Requirement	Description of Relocated Requirements	Location	Change Control Process	Change Type
3.7.1 NONE	NONE	NONE	NONE	NONE	NONE
3.7.2 LA1	15.4.7.A	Details in the CTS related to the steam flow conditions required for testing the main steam stop valves.	Bases	Bases Control Program described in ITS 5.5.13.	3
3.7.3 NONE	NONE	NONE	NONE	NONE	NONE
3.7.4 NONE	NONE	NONE	NONE	NONE	NONE
3.7.5 LA1	15.3.4.A.2.a, 15.3.4.A.2.b, 15.3.4.C.1, 15.3.4.C.2	CTS details related to the shared interrelationship of the motor driven AFW pumps.	Bases	Bases Control Program described in ITS 5.5.13.	3
3.7.5 LA2	15.3.4.A.3, 15.3.4.A.4	Details related to system design encompassed by definition of operability, and implementation of the CTS requirement to test the service water suction supply valves to the auxiliary feedwater system.	3.7.5 Bases	Bases Control Program described in ITS 5.5.13.	1, 4
3.7.5 LA3	N/A	Not used.	N/A	N/A	N/A
3.7.5 LA4	15.3.4.A.2.b	Detail in the CTS regarding components that are required to support auxiliary feedwater system operability and that are included in an AFW pump system.	3.7.5 Bases	Bases Control Program described in ITS 5.5.13.	1, 3
3.7.6 NONE	NONE	NONE	NONE	NONE	NONE
3.7.7 LA1	15.3.3.C.1.a, 15.3.3.C.1.b, 15.3.3.C.1.c	Detail in the CTS specifying the minimum required Component Cooling Water components necessary to consider the system operable.	Bases, FSAR	Bases Control Program described in ITS 5.5.13, 10 CFR 50.59	3

CHANGE TYPES

1. Details of System Design and System Description including Design Limits
2. Description of System or Plant Operation
3. Procedural Details for Meeting TS Requirement and Relocated Reporting Requirements
4. Relocated Redundant Requirements

Table R – Relocated Specifications and Removed Details
ITS Section 3.7 – Plant Systems

Doc No.	CTS Requirement	Description of Relocated Requirements	Location	Change Control Process	Change Type
3.7.8 LA1	15.3.3.D.1.b	Detail in the CTS requiring all necessary piping to be operable for the Service Water System to be operable.	3.7.8 Bases	Bases Control Program described in ITS 5.5.13.	3
3.7.8 LA2	15.3.3.D.2.c	Details of the CTS provision allowing the LCO for an inoperable Service Water System non-essential load isolation valve to be exited if the line is isolated with a seismically qualified valve.	3.7.8 Bases	Bases Control Program described in ITS 5.5.13.	3
3.7.9 NONE	NONE	NONE	NONE	NONE	NONE
3.7.10 LA1	N/A	Not used.	N/A	N/A	N/A
3.7.11 NONE	NONE	NONE	NONE	NONE	NONE
3.7.12 NONE	NONE	NONE	NONE	NONE	NONE
3.7.13 NONE	NONE	NONE	NONE	NONE	NONE
3.7.14 NONE	NONE	NONE	NONE	NONE	NONE
3.7.15 NONE	NONE	NONE	NONE	NONE	NONE
3.7.16 NONE	NONE	NONE	NONE	NONE	NONE
3.7.17 LA1	15.5.4.4	CTS requirements controlling the use of spent fuel rack storage locations immediately adjacent to the spent fuel pool perimeter and divider walls.	TRM	10 CFR 50.59	3
3.7.18 LA1	Table 15.4.1-2 Item 8.1, Table 15.4.1-2 Item 8.2	The CTS limit for secondary coolant specific activity, and acceptable methods for verifying compliance.	3.7.13 Bases	Bases Control Program described in ITS 5.5.13.	3

CHANGE TYPES

1. Details of System Design and System Description including Design Limits
2. Description of System or Plant Operation
3. Procedural Details for Meeting TS Requirement and Relocated Reporting Requirements
4. Relocated Redundant Requirements

Table R – Relocated Specifications and Removed Details
ITS Section 3.7 – Plant Systems

Doc No.	CTS Requirement	Description of Relocated Requirements	Location	Change Control Process	Change Type
3.7.18 LA2	15.3.1.D.8	The CTS requirement that secondary coolant gross radioactivity be measured daily when the air ejector monitor is not operating.	TRM	10 CFR 50.59	3
N/A N/A	15.3.13, 15.3.13.1, 15.3.13.2, 15.3.13.3, 15.3.13.4	Relocates the requirements for the snubbers.	TRM	10 CFR 50.59	N/A
N/A N/A	15.4.12.A, 15.4.12.A.1, 15.4.12.A.2, 15.4.12.B, 15.4.12.B.1, 15.4.12.B.2, 15.4.12.B.3	Relocates the sealed radioactive sources requirements.	TRM	10 CFR 50.59	N/A
N/A N/A	15.4.14, 15.4.14.1	Relocates the auxiliary building crane lifting devices surveillance requirements.	TRM	10 CFR 50.59	N/A

CHANGE TYPES

1. Details of System Design and System Description including Design Limits
2. Description of System or Plant Operation
3. Procedural Details for Meeting TS Requirement and Relocated Reporting Requirements
4. Relocated Redundant Requirements

Table A – Administrative Changes
ITS Section 3.8 – Electrical Power Systems

DOC No.	Description of Change	ITS Requirement	CTS Requirement
3.8.1 A1	Editorial changes, reformatting, and revised numbering.	3.8.1, SR 3.8.1.4, SR 3.8.1.5	15.3.0.D, 15.3.6, 15.3.7, 15.4.6, 15.4.6.A.2, 15.4.6.A.5
3.8.1 A2	Removes the introductory Applicability statement at the beginning of each CTS section. These statements were strictly informational and did not establish any regulatory requirements.	3.8.1 title	15.3.7 Applicability, 15.4.6 Applicability
3.8.1 A3	Removes the introductory Objective statement at the beginning of each CTS section. These statements were strictly informational and did not establish any regulatory requirements.	3.8.1 Bases	15.3.7 Objective, 15.4.6 Objective
3.8.1 A4	CTS provisions allowing the requirements for AC power sources to be modified such that specified components may be inoperable for a limited period of time, and establishing the structure for remedial actions, have been reflected in the ITS as specific usage rules for consistent application of the Conditions and Required Actions associated with varying system inoperabilities. This change does not alter any operational restrictions and is administrative.	N/A	15.3.7.B.1
3.8.1 A5	The Bases have been completely replaced by revised Bases that reflect the format and applicable content of NUREG-1431.	3.8.1 Bases	Bases
3.8.1 A6	The CTS provision allowing unit operation utilizing the opposite unit's 345/13.8 kV transformer, provided the gas turbine generator is operating and the 4.16 kV/480 V safeguards buses are energized from their normal power supply and capable of being powered from an emergency power supply have been equivalently reflected in the ITS. This change does not alter any operational restrictions and is administrative.	3.8.1.a, 3.8.1.b, 3.8.1.c, 3.8.1 ACTION A	15.3.7.A.1.b, 15.3.7.A.1.c, 15.3.7.A.1.l
3.8.1 A7	The CTS requirement that applicable Actions be entered for equipment supported by any de-energized safeguards bus has been equivalently retained in the ITS. This change does not alter any operational restrictions and is administrative.	3.8.1 Required Action F.1 Note	15.3.7.A.1.k
3.8.1 A8	The CTS requirement that each required diesel generator be started and loaded for a specified time period on a monthly frequency has been retained in the ITS as Surveillance Requirements. This change does not modify any operational restrictions and is administrative.	SR 3.8.1.2, SR 3.8.1.2 Note 2, SR 3.8.1.3, SR 3.8.1.3 Note 1, SR 3.8.1.3 Note 3	15.4.6.A.1

Table A – Administrative Changes
ITS Section 3.8 – Electrical Power Systems

DOC No.	Description of Change	ITS Requirement	CTS Requirement
3.8.1 A9	The CTS Actions for inoperable normal and standby emergency AC power supplies provide an informational statement that if the normal power supply is out of service the operable diesel generator will be supplying the affected safeguards buses that has been omitted from the ITS. This change does not modify any operational restrictions and is administrative.	N/A	15.3.7.B.1.f, 15.3.7.B.1.g, 15.3.7.B.1.h
3.8.1 A10	CTS requirements for an inoperable standby emergency power sources involving allowable combinations of inoperable standby emergency power sources and redundant engineered safety features, the time allowed to start a standby power supply, the time allowed to restore a standby power supply, and default actions in the event these requirements are not met have been equivalently reflected in the ITS. This change does not modify any operational restrictions and is administrative.	3.8.1 ACTION E, 3.8.1 ACTION E Note, 3.8.1 Required Action E.2.2, 3.8.1 Required Action E.2.3, 3.8.1 Required Action E.3, 3.8.1 ACTION H, 3.8.1 Required Action H.2	15.3.7.B.1.f, 15.3.7.B.1.g, 15.3.7.B.1.h
3.8.1 A11	CTS requirements for an inoperable normal power source involving allowable combinations of inoperable required offsite power sources and redundant engineered safety features, and default actions in the event these requirements are not met have been equivalently reflected in the ITS. This change does not modify any operational restrictions and is administrative.	3.8.1 ACTION D, 3.8.1 Required Action D.2, 3.8.1 ACTION H, 3.8.1 Required Action H.2	15.3.7.B.1.f, 15.3.7.B.1.g, 15.3.7.B.1.h
3.8.1 A12	The CTS statement that, "the above tests will be considered satisfactory if all applicable equipment operates as designed," is informational and has been omitted from the ITS. This change does not alter any operational restrictions and is administrative.	N/A	15.4.6.A
3.8.2 NONE	NONE	NONE	NONE
3.8.3 A1	Editorial changes, reformatting, and revised numbering.	SR 3.8.3.2	15.4.6.A.6
3.8.3 A2	The Bases have been completely replaced by revised Bases that reflect the format and applicable content of NUREG-1431.	3.8.3 Bases	Bases
3.8.3 A3	ITS provides explicit LCO requirements for stored fuel oil and starting air that was previously inferred under CTS through the definition of OPERABILITY. This change is administrative because it reflects current practice and does not alter any operational restrictions.	3.8.3	N/A

Table A – Administrative Changes
ITS Section 3.8 – Electrical Power Systems

DOC No.	Description of Change	ITS Requirement	CTS Requirement
3.8.3 A4	ITS provides an explicit requirement to declare the associated standby emergency power source inoperable when the volume of stored fuel oil is not within limits that was inferred under CTS through the definition of OPERABILITY. This change is administrative because it reflects current practice and does not alter any operational restrictions.	3.8.3 ACTION A, 3.8.3 Required Action A.1, 3.8.3 ACTION E, 3.8.3 Required Action E.1	N/A
3.8.3 A5	ITS provides an explicit requirement to declare the associated standby emergency power source inoperable when the starting air system is inoperable that was inferred under CTS through the definition of OPERABILITY. This change is administrative because it reflects current practice and does not alter any operational restrictions.	3.8.3 ACTION D, 3.8.3 Required Action D.1	N/A
3.8.4 A1	Editorial changes, reformatting, and revised numbering.	3.8.4, 3.8.4 ACTION A, 3.8.4 Required Action A.1, 3.8.4 ACTION B, SR 3.8.4.7	15.3.7, 15.3.7.B.1.i, 15.3.7.B.1.l, 15.3.7.B.4.a
3.8.4 A2	Removes the introductory Applicability statement at the beginning of each CTS section. These statements were strictly informational and did not establish any regulatory requirements.	3.8.4 title	15.3.7 Applicability, 15.4.6 Applicability
3.8.4 A3	Removes the introductory Objective statement at the beginning of each CTS section. These statements were strictly informational and did not establish any regulatory requirements.	3.8.4 Bases	15.3.7 Objective, 15.4.6 Objective
3.8.4 A4	The implicitly stated applicability of CTS requirements for the safety related batteries and their associated chargers to be operable and carrying bus loads has been equivalently reflected in the ITS as Modes 1, 2, 3, and 4. This change is administrative since it does not alter any operational restrictions.	3.8.4	15.3.7.A.1
3.8.4 A5	The CTS requirement for the safety related batteries and chargers to be operable with the charger carrying the DC loads on each safety related distribution bus have been equivalently reflected in the ITS. This change is administrative since it does not alter any operational restrictions.	3.8.4	15.3.7.A.1.f, 15.3.7.A.1.g
3.8.4 A6	The Bases have been completely replaced by revised Bases that reflect the format and applicable content of NUREG-1431.	3.8.4 Bases	Bases
3.8.4 A7	CTS provisions allowing the requirements for electrical power distribution to be modified such that specified components may be inoperable for a limited period of time, and establishing the structure for remedial actions, have been reflected in the ITS as specific usage rules for consistent application of the Conditions and Required Actions associated with varying system inoperabilities. This change does not alter any operational restrictions and is administrative.	N/A	15.3.7.B.1

Table A – Administrative Changes
ITS Section 3.8 – Electrical Power Systems

DOC No.	Description of Change	ITS Requirement	CTS Requirement
3.8.4 A8	The CTS requirement that applicable LCO Actions be entered for equipment affected by a deenergized safeguards bus has been reflected in the ITS as LCO requirement that affected equipment be declared inoperable when its associated bus is deenergized, and also through the ITS definition of Operability. This change does not alter any operational restrictions and is administrative.	3.8.4 Required Action A.1 Note	15.3.7.A.1.k
3.8.5 NONE	NONE	NONE	NONE
3.8.6 A1	Editorial changes, reformatting, and revised numbering.	3.8.6	15.3.7, 15.4.6
3.8.6 A2	Removes the introductory Applicability statement at the beginning of each CTS section. These statements were strictly informational and did not establish any regulatory requirements.	3.8.6 title	15.3.7 Applicability, 15.4.6 Applicability
3.8.6 A3	Removes the introductory Objective statement at the beginning of each CTS section. These statements were strictly informational and did not establish any regulatory requirements.	3.8.6 Bases	15.3.7 Objective, 15.4.6 Objective
3.8.6 A4	The implicitly stated applicability of CTS requirements for the station DC electrical power subsystems, including battery cell parameters, has been equivalently reflected in the ITS as when associated DC electrical power subsystems are required to be operable. This change is administrative since it does not alter any operational restrictions.	3.8.6	15.3.7.A.1, 15.3.7.A.1.f, 15.4.6.B
3.8.6 A5	The Bases have been completely replaced by revised Bases that reflect the format and applicable content of NUREG-1431.	3.8.7 Bases	Bases
3.8.7 A1	Editorial changes, reformatting, and revised numbering.	3.8.7, 3.8.7 ACTION A, 3.8.7 Required Action A.1, 3.8.7 ACTION B, 3.8.7 Required Action B.1, 3.8.7 Required Action B.2	
3.8.7 A2	Removes the introductory Applicability statement at the beginning of each CTS section. These statements were strictly informational and did not establish any regulatory requirements.	3.8.7 title	15.3.7 Applicability
3.8.7 A3	Removes the introductory Objective statement at the beginning of each CTS section. These statements were strictly informational and did not establish any regulatory requirements.	3.8.7 Bases	15.3.7 Objective

Table A – Administrative Changes
ITS Section 3.8 – Electrical Power Systems

DOC No.	Description of Change	ITS Requirement	CTS Requirement
3.8.7 A4	The CTS requirement that the 120 V Instrument buses be periodically checked to ensure proper breaker alignment and energization of the buses has been equivalently reflected as a Surveillance requirement in the ITS. This change is administrative since it does not alter any operational restrictions.	SR 3.7.8.1	Table 15.4.1-1 Item 14, Table 15.4.1-1 Item 14 Note (6), Table 15.4.1-1 W – weekly
3.8.7 A5	The CTS requirement that the vital instrument buses be energized from a safety related inverter has been equivalently reflected in the ITS. This change is administrative since it does not alter any operational restrictions.	3.8.7, SR 3.7.8.1	15.3.7.A.1.h
3.8.7 A6	ITS provides explicit direction that the supported feature(s) associated with an inoperable bus be declared inoperable immediately that equivalently reflects provisions that implicitly existed under CTS through application of the definition of Operability. This change is administrative since it does not alter any operational restrictions.	3.8.7 Required Action A.1 Note	N/A
3.8.7 A7	The implicitly stated applicability of CTS requirements for the safety-related inverters has been equivalently reflected in the ITS as Modes 1, 2, 3, and 4. This change is administrative since it does not alter any operational restrictions.	3.8.7	15.3.7.A.1, 15.3.7.B.1.j
3.8.8 NONE	NONE	NONE	NONE
3.8.9 A1	Editorial changes, reformatting, and revised numbering.	3.8.9	15.3.7
3.8.9 A2	Removes the introductory Applicability statement at the beginning of each CTS section. These statements were strictly informational and did not establish any regulatory requirements.	3.8.9 title	15.3.7 Applicability
3.8.9 A3	Removes the introductory Objective statement at the beginning of each CTS section. These statements were strictly informational and did not establish any regulatory requirements.	3.8.9 Bases	15.3.7 Objective
3.8.9 A4	The implicitly stated applicability of CTS requirements for the 4.16 kV and 480 V Safeguards buses, DC distribution systems, and 120 VAC Instrument buses, which is effectively "whenever the associated equipment is required to be operable," have been equivalently reflected in the ITS. This change is administrative since it does not alter any operational restrictions.	3.8.9, 3.8.9.a, 3.8.9.b, 3.8.9.c, 3.8.9.d, 3.8.9.e	15.3.7.A.1, 15.3.7.A.1.f, 15.3.7.A.1.h, 15.3.7.A.1.i, NEW

Table A – Administrative Changes
ITS Section 3.8 – Electrical Power Systems

DOC No.	Description of Change	ITS Requirement	CTS Requirement
3.8.9 A5	The CTS provision allowing the 480 V Safeguards Buses of a unit that is in cold shutdown, refueling, or defueled to be cross-tied providing specific limitations are met have been equivalently reflected in the ITS. This change does not modify any operational restrictions and is administrative.	3.8.9 Note 1, 3.8.9 Note 1.a, 3.8.9 Note 1.b, 3.8.9 Note 1.c, 3.8.9 Note 2, 3.8.9 Note 2.a, 3.8.9 Note 2.b, 3.8.9 Note 2.c	15.3.7.B.1.d, 15.3.7.B.1.e, 15.3.7.B.1.e.1), 15.3.7.B.1.e.3)
3.8.9 A6	The CTS requirement that the operating unit be placed into hot shutdown within 6 hours, and cold shutdown within the following 36 hours, if cross-tie provisions for the 480 V Safeguards Buses are not met have been reflected in the ITS. This change does not alter any operational restrictions and is administrative.	3.8.9 ACTION B, 3.8.9 Required Action B.1, 3.8.9 Required Action B.2	15.3.7.B.1.d, 15.3.7.B.1.e
3.8.9 A7	The Bases have been completely replaced by revised Bases that reflect the format and applicable content of NUREG-1431.	3.8.9 Bases	Bases
3.8.9 A8	The CTS requirement to periodically check the 120 V Instrument buses to ensure proper breaker alignment and energization of the buses has been equivalently reflected in the ITS. This change is administrative since it does not alter any operational restrictions.	SR 3.8.9.1	Table 15.4.1-1 Item 14, Table 15.4.1-1 Item 14 Note (6), Table 15.4.1-1 W – weekly
3.8.9 A9	CTS provisions allowing the requirements for electrical power distribution to be modified such that specified components may be inoperable for a limited period of time, and establishing the structure for remedial actions, have been reflected in the ITS as specific usage rules for consistent application of the Conditions and Required Actions associated with varying system inoperabilities. This change does not alter any operational restrictions and is administrative.	N/A	15.3.7.B.1
3.8.9 A10	The CTS statement requiring that the applicable LCO Actions be entered for equipment that is removed from service to comply with bus load limits when a 480 V Safeguards Buses associated with a defueled unit is cross-tied has been omitted from the ITS since it is adequately addressed through the definition of Operability and the ITS usage rules. This change does not alter any operational restrictions and is administrative.	N/A	15.3.7.B.1.e.1)
3.8.10 A1	Editorial changes, reformatting, and revised numbering.	3.8.10	15.3.7.B.1

Table A – Administrative Changes
ITS Section 3.8 – Electrical Power Systems

DOC No.	Description of Change	ITS Requirement	CTS Requirement
3.8.10 A2	The CTS provision allowing the 480 V Safeguards Buses of a unit that is defueled to be cross-tied provided the redundant decay heat removal systems is operable have been equivalently reflected in the ITS. This change does not modify any operational restrictions and is administrative.	N/A	15.3.7.B.1.d
3.8.10 A3	The CTS provision allowing the 480 V Safeguards Buses of a unit that is in cold shutdown, refueling, or defueled to be cross-tied providing specific limitations are met have been equivalently reflected in the ITS. This change does not modify any operational restrictions and is administrative.	3.8.10 Note	15.3.7.B.1
3.8.10 A4	The Bases have been completely replaced by revised Bases that reflect the format and applicable content of NUREG-1431.	3.8.10 Bases	Bases
3.8.10 A5	The implicitly stated applicability of CTS requirements for the 4.16 kV and 480 V Safeguards buses, DC distribution systems, and 120 VAC Instrument buses, which is effectively "whenever the associated equipment is required to be operable," have been equivalently reflected in the ITS. This change is administrative since it does not alter any operational restrictions. This change does not modify any operational restrictions and is administrative.	3.8.10, 3.8.10 ACTION A, 3.8.10 Required Action A.1, 3.8.10 Required Action A.2	N/A
3.8.10 A6	The CTS requirement that the 120 V Instrument buses be periodically checked to ensure proper breaker alignment and energization of the buses has been equivalently reflected as an ITS Surveillance Requirement. This change does not modify any operational restrictions and is administrative.	SR 3.8.10.1	Table 15.4.1-1 Item 14, Table 15.4.1-1 Item 14 Note (6), Table 15.4.1-1 W – weekly

Table L – Less Restrictive Changes
ITS Section 3.8 – Electrical Power Systems

DOC No.	Description of Change	ITS Requirement	CTS Requirement	Change Type
3.8.1 L1	CTS requirements when a system, subsystem, train, component or device redundant to one associated with an inoperable AC source is discovered inoperable are relaxed under ITS through the addition of a provision allowing 12 hours to restore an inoperable offsite circuit, and 4 hours if one DG is inoperable.	3.8.1 Required Action D.1, 3.8.1 Required Action E.1	15.3.0.D	4
3.8.1 L2	The CTS requirement that the unit associated with an out of service 13.8 / 4.16 kV transformer be placed in hot shutdown is relaxed under ITS to require restoration of the required offsite power source to an OPERABLE status within 24 hours.	3.8.1 ACTION B, 3.8.1 Required Action B.1	15.3.7.B.1.c	4
3.8.1 L3	The CTS requirement that the redundant standby emergency power supplies be started within 24 hours of an out of service normal or standby emergency power supply, and also requires the redundant standby emergency power supply be started every 72 hours thereafter. These requirements have not been retained in ITS.	3.8.1 Required Action E.2.1	15.3.7.B.1.f, 15.3.7.B.1.g, 15.3.7.B.1.h, NEW	4
3.8.1 L4	The CTS provision allowing continued operation when a normal or standby emergency power sources is out of service, provided the required redundant engineered safety features are operable, is relaxed under ITS to allow 12 hours before declaring the required features supported by the inoperable offsite power source inoperable, and 4 hours before declaring the required features supported by the inoperable standby emergency power source inoperable.	3.8.1 Required Action D.1, 3.8.1 Required Action E.1	N/A	4
3.8.1 L5	An ITS Condition has been added allowing operation for up to 2 hours, in lieu of the CTS requirement for plant shutdown under 15.3.0.B, when either the standby emergency power to both safeguards buses on the same unit are inoperable (i.e. 1A05/1B03 and 1A06/1B04, or 2A05/2B03 and 2A06/2B04), or standby emergency power to safeguards buses 1A05/1B03 and 2A06/2B04~~, or standby emergency power to safeguards buses 1A05 and 2A06~~ are inoperable.	3.8.1 ACTION G, 3.8.1 Required Action G.1	N/A	1

CHANGE TYPES

1. Relaxation of LCO Requirement
2. Relaxation of Applicability
3. Relaxation of Surveillance Requirement
4. Relaxation of Required Action
5. Relaxation of CTS Reporting Requirements
6. Relaxation of Completion Time
7. Deletion of Requirements Redundant to Regulations

Table L – Less Restrictive Changes
ITS Section 3.8 – Electrical Power Systems

DOC No.	Description of Change	ITS Requirement	CTS Requirement	Change Type
3.8.1 L6	An ITS Condition has been added allowing operation for up to 24 hours, in lieu of the CTS requirement for plant shutdown under 15.3.0.B, when either offsite power to both safeguards buses on the same unit are inoperable, or offsite power to safeguards buses 1A05 and 2A06 are inoperable.	3.8.1 ACTION C, 3.8.1 Required Action C.1	N/A	1
3.8.1 L7	The CTS requirement specifying that DG testing must be initiated by an actual interruption of normal station AC power supplies to associated engineered safety systems busses together with a simulated SI signal is relaxed under ITS to allow either an actual or simulated loss of offsite power signal in conjunction with an actual or simulated ESF actuation signal.	SR 3.8.1.5	15.4.6.A.2	3
3.8.1 L8	The CTS requirement that testing of the DGs will include an additional demonstration of automatic load shedding and restoration of vital loads by manually tripping the DG output breaker after the DG has carried its load for a minimum of 5 minutes has not been retained in the ITS.	N/A	15.4.6.A.2	3
3.8.1 L9	The requirement to initiate a unit shutdown under CTS 15.3.0.b if the associated unit's 345/13.8 and 13.8/4.16 kV transformers are not in service and the gas turbine generator is not operating is relaxed under ITS to allow 24 hours to place the gas turbine in operation.	3.8.1 Required Action A.2	15.3.7.A.1.b	4
3.8.1 L10	The CTS requirement to initiate a unit shutdown under CTS 15.3.0.B if the offsite and emergency power sources to a safeguards bus are inoperable is relaxed under ITS to immediately require entry into the ACTIONS associated with inoperable supported equipment.	3.8.1 ACTION F, 3.8.1 Required Action F.1, 3.8.1 Required Action F.2	15.3.0.D, 15.3.7.B.1.k	1
3.8.1 L11	Detail in the CTS specifying the method of starting or synchronizing the DG, as well as editorial information about the effect of the test on plant operation has not been retained in ITS.	N/A	15.4.6.A.1	3

CHANGE TYPES

1. Relaxation of LCO Requirement
2. Relaxation of Applicability
3. Relaxation of Surveillance Requirement
4. Relaxation of Required Action
5. Relaxation of CTS Reporting Requirements
6. Relaxation of Completion Time
7. Deletion of Requirements Redundant to Regulations

Table L – Less Restrictive Changes
ITS Section 3.8 – Electrical Power Systems

DOC No.	Description of Change	ITS Requirement	CTS Requirement	Change Type
3.8.1 L12	The CTS requirements for 345 KV transmission lines have not been retained in ITS.	N/A	15.3.7.A.1.a, 15.3.7.B.1.a	1
3.8.2 NONE	NONE	NONE	NONE	NONE
3.8.3 L1	The CTS requirement to perform a daily verification of stored diesel fuel inventory in each tank that is being relied upon to supply any operable emergency diesel generator(s) is relaxed under ITS to require this verification once per 31 days.	SR 3.8.3.1	Table 15.4.1-2 Item 17	3
3.8.4 L1	The CTS requirement that battery performance tests be performed every 60 months; or at an annual frequency if a battery has reached 85% of its expected service life or experiences degradation, is relaxed under ITS to allow a modified battery performance test, and extend the 12 month test frequency to 24 months when a battery has reached 85% of its expected service life provided it is at greater than or equal to the manufacturers rating.	SR 3.8.4.8	15.4.6.B.4.b	3
3.8.5 NONE	NONE	NONE	NONE	NONE
3.8.6 L1	The CTS requirement to measure and record the amount of water added for each battery cell, as well as details regarding which cells are measured for temperature, and trending requirements have not been retained in the ITS.	N/A	15.4.6.B.2, 15.4.6.B.3	3
3.8.7 L1	The CTS requirement to verify that the 120 V vital instrument buses are energized with proper breaker alignment once each shift has been relaxed under ITS to require this verification weekly.	3.8.7, SR 3.8.7.1	15.3.7.A.1, Table 15.4.1-2 Item 26, Table 15.4.1-2 Item 26 Note (12)	3
3.8.8 NONE	NONE	NONE	NONE	NONE

CHANGE TYPES

1. Relaxation of LCO Requirement
2. Relaxation of Applicability
3. Relaxation of Surveillance Requirement
4. Relaxation of Required Action
5. Relaxation of CTS Reporting Requirements
6. Relaxation of Completion Time
7. Deletion of Requirements Redundant to Regulations

Table L – Less Restrictive Changes
ITS Section 3.8 – Electrical Power Systems

DOC No.	Description of Change	ITS Requirement	CTS Requirement	Change Type
3.8.9 L1	The CTS requirement to verify that the 120 V vital instrument buses are energized with proper breaker alignment once each shift has been relaxed under ITS to require this verification weekly.	SR 3.8.9.1	Table 15.4.1-2 Item 26, Table 15.4.1-2 Item 26 Note (12)	3
3.8.10 L1	The CTS requirement to verify that the 120 V vital instrument buses are energized with proper breaker alignment once each shift has been relaxed under ITS to require this verification weekly.	SR 3.8.10.1	Table 15.4.1-2 Item 26, Table 15.4.1-2 Item 26 Note (12)	3

CHANGE TYPES

1. Relaxation of LCO Requirement
2. Relaxation of Applicability
3. Relaxation of Surveillance Requirement
4. Relaxation of Required Action
5. Relaxation of CTS Reporting Requirements
6. Relaxation of Completion Time
7. Deletion of Requirements Redundant to Regulations

Table M – More Restrictive Changes
ITS Section 3.8 – Electrical Power Systems

DOC No.	Description of Change	ITS Requirement	CTS Requirement
3.8.1 M1	ITS expands the CTS requirement that- AC electrical sources must operable before either reactor is made critical (ITS Modes 1 and 2) to also include ITS Modes 3 and 4.	3.8.1, 3.8.1 Required Action H.1	15.3.7.A.1, 15.3.7.B.1.c
3.8.1 M2	CTS requirements for inoperable normal or standby emergency power supply(s) have been expanded under ITS to add a 14 day limit from discovery of failure to meet the LCO due to any combination of required AC power sources being inoperable during a contiguous occurrence of failing to meet the LCO.	3.8.1 Required Action D.2, 3.8.1 Required Action E.3	N/A
3.8.1 M3	The CTS requirement to start, synchronize, and load the DG with other power sources at a load not to exceed 2850 kW, and for a minimum of 30 minutes has been expanded under ITS to require each DG to be synchronized, loaded, and operated for greater than or equal to 60 minutes at a load greater than or equal to 2500 KW and less than or equal to 2850 KW.	SR 3.8.1.3, SR 3.8.1.3 Note 2	15.4.6.A.1,
3.8.1 M4	The CTS has been modified by adoption of an ITS Surveillance Requirement to ensure proper circuit continuity for the offsite AC electrical power supply to the onsite distribution network and availability of offsite AC electrical power.	SR 3.8.1.1	N/A
3.8.1 M5	The CTS has been modified by adoption of an ITS Surveillance Requirement to ensure that manual synchronization and load transfer from the standby emergency power source to the offsite source can be made, that the standby emergency power source can be returned to ready to load status when offsite power is restored, and that the auto-start logic is reset to allow the standby emergency power source to reload if a subsequent loss of offsite power occurs.	SR 3.8.1.6	N/A
3.8.1 M6	The CTS requirement to demonstrate standby emergency power source operation during an actual loss of offsite power in conjunction with a simulated safety injection signal at each reactor shutdown for major fuel reloading is modified under ITS to require this test once per 18 months.	SR 3.8.1.5	15.4.6.A.2
3.8.1 M7 ~~open~~	ITS adds a requirement to verify offsite power is supplying the associated unit's 4.16 kV safeguards buses within 24 hours when the associated unit's 345/13.8 kV and 13.8/4.16 kV transformers are inoperable provided the opposite unit's 345/13.8 kV transformer is in service, and the gas turbine generator is operating.	3.8.1 Required Action A.1	15.3.7.A.1.b
3.8.1 M8	The CTS provision that would allow one reactor to remain operating at less than 50% power with the other reactor in the hot shutdown condition when both 345 kV/13.8 kV auxiliary transformers are out of service and only the gas turbine is operating has not being retained in ITS.	N/A	15.3.7.B.1.b
3.8.1 M9	The CTS requirement that each diesel generator be started and loaded for a specified period of time are expanded under ITS to also require verification that speed and voltage are within limits.	SR 3.8.1.2	15.4.6.A.1

Table M – More Restrictive Changes
ITS Section 3.8 – Electrical Power Systems

DOC No.	Description of Change	ITS Requirement	CTS Requirement
3.8.1 M10	The CTS requirement that each required diesel generator be automatically started and loaded is expanded under ITS to also require verification that frequency and voltage are within limits.	SR 3.8.1.5	15.4.6.A.2
3.8.2 M1 ~~open~~	ITS adds requirements for one circuit between the offsite transmission network and the 480 V Class 1E safeguards buses, and one standby emergency power source capable of supplying one of the associated unit's 480 V Class 1E safeguards buses to be operable in Modes 5 and 6, requires immediate initiation of actions to restore the required AC power sources to OPERABLE status.	3.8.2, 3.8.2.a, 3.8.2.b, SR 3.8.2.1, SR 3.8.2.2, SR 3.8.2.3, SR 3.8.2.4, SR 3.8.2.5, 3.8.2 ACTION A, 3.8.2 Required Action A.1, 3.8.2 Required Action A.2, 3.8.2 ACTION B, 3.8.2 Required Action B.1, 3.8.2 Required Action B.2	N/A
3.8.3 M1	The ITS adds a requirement to restore fuel oil total particulate limits within 7 days, and imposes a 30 day limit to restore other stored fuel oil properties when new fuel properties are not within the limits specified in the Diesel Fuel Oil Testing Program.	3.8.3 ACTION B, 3.8.3 Required Action B.1, 3.8.3 ACTION C, 3.8.3 Required Action C.1	N/A
3.8.3 M2	ITS adds requirements for periodic verification of sufficient air start capacity, and removal of water from each fuel oil storage tank.	SR 3.8.3.3, SR 3.8.3.4	N/A
3.8.4 M1	The CTS provision allowing 24 hours to restore an inoperable battery to operable status is reduced under ITS to 2 hours.	3.8.4 Required Action A.1	15.3.7.B.1.1

Table M – More Restrictive Changes
ITS Section 3.8 – Electrical Power Systems

DOC No.		Description of Change	ITS Requirement	CTS Requirement
3.8.4	M2	The CTS requirement to shutdown both units if an inoperable battery charger is not restored within the allowable outage time is modified under ITS to require Mode 5 to be reached sooner.	3.8.4 Required Action B.1, 3.8.4 Required Action B.2	15.3.7.B.1.1
3.8.4	M3	ITS adds new Surveillance Requirements for verification of battery connector state, visual verification of battery and battery rack integrity, removal of visible corrosion and coating of the battery terminals with an anti-corrosive, verification that battery terminal resistance is within limits; and performance of a battery charger capability check.	SR 3.8.4.2, SR 3.8.4.3, SR 3.8.4.4, SR 3.8.4.5, SR 3.8.4.6	N/A
3.8.4	M4	The CTS requirement to measure battery voltage once every month is increased under ITS to once every 7 days.	SR 3.8.4.1	15.4.6.B.1
3.8.4	M5	The CTS provision allowing a battery performance discharge test to be performed in lieu of service test has been retained in the ITS as a requirement to only allow a "modified " performance test to be used in lieu of the service test, and limit this substitution to once every 60 months.	SR 3.8.4.7 Note	15.4.6.B.4.b, 15.4.6.B.4.c
3.8.5	M1	ITS adds a specific LCO, and Conditions, Actions, and Surveillance Requirements for DC sources in Modes 5 and 6 that were not explicitly stated in the CTS.	3.8.5, Bases, 3.8.5 ACTION A, 3.8.5 Required Action A.1, 3.8.5 Required Action A.2, SR 3.8.5.1,	N/A

Table M – More Restrictive Changes
ITS Section 3.8 – Electrical Power Systems

DOC No.	Description of Change	ITS Requirement	CTS Requirement
3.8.6 M1	The ITS provides more prescriptive performance limitations for battery cell parameters and increases the surveillance frequency from monthly to once per 7 days.	SR 3.8.6.1, Table 3.8.6-1 Footnote (a), Table 3.8.6-1 Footnote (b), Table 3.8.6-1 Footnote (c), Table 3.8.6-1 Specific Gravity, Table 3.8.6-1 Float Voltage, Table 3.8.6-1 Electrolyte Level	15.4.6.B.1
3.8.6 M2	The ITS provides more prescriptive performance limitations for battery cell parameters, increases the surveillance frequency to require battery cell parameter verification within 24 hours after a significant battery discharge or overcharge, and requires verification that the average electrolyte temperature of representative cells is greater than or equal to 60 degrees F.	SR 3.8.6.2, SR 3.8.6.3, Table 3.8.6-1 Specific Gravity, Table 3.8.6-1 Float Voltage, Table 3.8.6-1 Electrolyte Level	15.4.6.B.2
3.8.6 M3	The ITS adds explicit Conditions and Required Actions for non-compliance with battery cell parameters that did not exist in the CTS.	3.8.6, 3.8.6 ACTION A, 3.8.6 Required Action A.1, 3.8.6 Required Action A.2, 3.8.6 Required Action A.3, 3.8.6 ACTION B, 3.8.6 Required Action B.1	N/A
3.8.7 NONE	NONE	NONE	NONE

Table M – More Restrictive Changes
ITS Section 3.8 – Electrical Power Systems

DOC No.	Description of Change	ITS Requirement	CTS Requirement
3.8.8 M1	ITS adds a new LCO to address operability of the 120 VAC vital instrument bus inverters in Modes 5 and 6.	3.8.8, Bases, 3.8.8 ACTION A, 3.8.8 Required Action A.1, 3.8.8 Required Action A.2, SR 3.8.8.1	N/A
3.8.9 M1	ITS adds Surveillance Requirements to verify correct breaker alignment and power availability for all AC, DC, and vital instrument buses.	SR 3.8.9.1	15.3.7.A.1.d, 15.3.7.A.1.f, 15.3.7.A.1.h, 15.3.7.A.1.l,
3.8.9 M2	The ITS provides specific Actions in the event that one or more electrical power distribution subsystems are inoperable, and the Action to declare the associated supported features inoperable cannot be met, that allow a shorter time to shutdown the unit than would be granted under CTS 15.3.0.B.	3.8.9 ACTION A, 3.8.9 Required Action A.1	15.3.7.B.1.k
3.8.10 NONE	NONE	NONE	NONE

Table R – Relocated Specifications and Removed Details
ITS Section 3.8 – Electrical Power Systems

Doc No.	CTS Requirement	Description of Relocated Requirements	Location	Change Control Process	Change Type
3.8.1 LA1	~~15.3.7.A.1.a~~N/A	~~The CTS requirement for at least two 345 KV transmission lines, and actions in the event of a loss of one or more 345 KV lines.~~Not used.	~~FSAR~~N/A	~~10 CFR 50.59~~N/A	~~1~~N/A
3.8.1 LA2	N/A	Not used.	N/A	N/A	N/A
3.8.1 LA3	15.4.6.A.3	The CTS requirement that " proper operation of Emergency Lighting, including the automatic transfer switch for DC lights, will be demonstrated."	TRM	10 CFR 50.59	3
3.8.1 LA4	15.4.6.A.3	The CTS requirement that each diesel generator be inspected following the manufacturer's recommendations.	TRM	10 CFR 50.59	3
3.8.2 NONE	NONE	NONE	NONE	NONE	NONE
3.8.3 LA1	Table 15.4.1-2 Item 17	The CTS test frequency and criteria for stored diesel fuel oil, which is "in accordance with the applicable ASTM standards."	TRM	10 CFR 50.59	3
3.8.4 LA1	15.4.6.B.4.b	CTS criteria related to specific limits that define battery degradation.	Bases	Bases Control Program described in ITS 5.5.13.	3
3.8.5 NONE	NONE	NONE	NONE	NONE	NONE
3.8.6 LA1	N/A	Not used.	N/A	N/A	N/A
3.8.7 NONE	NONE	NONE	NONE	NONE	NONE
3.8.8 NONE	NONE	NONE	NONE	NONE	NONE
3.8.9 LA1	15.3.7.A.1.d	Details in the CTS related to the B03 and B04 480 V bus cross-tie breaker configuration.	Bases	Bases Control Program described in ITS 5.5.13.	3

CHANGE TYPES

1. Details of System Design and System Description including Design Limits
2. Description of System or Plant Operation
3. Procedural Details for Meeting TS Requirement and Relocated Reporting Requirements
4. Relocated Redundant Requirements

Table R – Relocated Specifications and Removed Details
ITS Section 3.8 – Electrical Power Systems

Doc No.	CTS Requirement	Description of Relocated Requirements	Location	Change Control Process	Change Type
3.8.9 LA2	15.3.7.B.1.e.2)	Limitations to the CTS provision allowing the 480 V Bus B03 and B04 associated with a unit that is in cold shutdown, refueling, or defueled, to be cross-tied.	FSAR	10 CFR 50.59	1
3.8.10 NONE	NONE	NONE	NONE	NONE	NONE

CHANGE TYPES

1. Details of System Design and System Description including Design Limits
2. Description of System or Plant Operation
3. Procedural Details for Meeting TS Requirement and Relocated Reporting Requirements
4. Relocated Redundant Requirements

Table A – Administrative Changes
ITS Section 3.9 – Refueling Operations

DOC No.	Description of Change	ITS Requirement	CTS Requirement
3.9.1 A1	Editorial changes, reformatting, and revised numbering.	3.9.1	15.3.8
3.9.1 A2	The CTS Note specifying primary coolant boron concentration limits based on whether the unit is operating pre or post refueling outage U1R25/U2R23 has not been retained in ITS since both units are operating post-outage, and the ITS reflects the post-outage values. This change is administrative because it only clarifies current operational practice.	N/A	15.3.8.5 Note *
3.9.1 A3	Actions specified in CTS for primary coolant boron concentration limits not being met during refueling have been reflected in the ITS. This change is administrative since it does not alter any operational restrictions.	3.9.1 Required Action A.1, 3.9.1 Required Action A.2, 3.9.1 Required Action A.3	15.3.8.9
3.9.1 A4	The Bases have been completely replaced by revised Bases that reflect the format and applicable content of NUREG-1431.	3.9.1 Bases	Bases
3.9.2 NONE	NONE	NONE	NONE
3.9.3 A1	Editorial changes, reformatting, and revised numbering.	3.9.2, SR 3.9.2.2	15.3.8.3, Table 15.4.1-1 14
3.9.3 A2	The CTS requirement for one audible subcritical neutron flux indication has been retained in the ITS.	3.9.2	15.3.8.3
3.9.3 A3	Applicability for the CTS required check and calibration of neutron source range instrument channels has been equivalently reflected in the ITS (i.e., when the plant is shutdown and any reactor vessel head bolt is less than fully tensioned). This change is administrative since it does not alter any operational restrictions.	SR 3.9.2.1, SR 3.9.2.2	Table 15.4.1-1 3, Table 15.4.1-1 3.1
3.9.4 A1	Editorial changes, reformatting, and revised numbering.	3.9.3	15.3.8.1
3.9.4 A2	Not used.	N/A	N/A
3.9.4 A3	CTS requirements and actions for Containment Purge and Vent System operability are equivalently reflected in ITS requirements for the Containment Purge and Exhaust System. This change is administrative since it does not alter any operational restrictions.	3.9.3 ACTION C, 3.9.3 Required Action C.1, 3.9.3 Required Action C.2	15.3.8.7
3.9.5 A1	Editorial changes, reformatting, and revised numbering.	3.9.4	15.3.8.4

Table A – Administrative Changes
ITS Section 3.9 – Refueling Operations

DOC No.	Description of Change	ITS Requirement	CTS Requirement
3.9.5 A2	CTS required actions in the event that at least one RHR loop is not in operation during refueling operations have been reflected in the ITS. This change is administrative since it does not alter any operational restrictions.	3.9.4 ACTION A, 3.9.4 Required Action A.1, 3.9.4 Required Action A.2, 3.9.4 Required Action A.3	15.3.1.A.3.b.(2), 15.3.8.9
3.9.6 A1	Editorial changes, reformatting, and revised numbering.	3.9.5	15.3.1.A.3.b
3.9.6 A2	The CTS requirement that both RHR loops be operable with the reactor vessel head is removed and the refueling cavity not flooded, and the actions when no RHR loops are in operation have been reflected in the ITS. This change is administrative since it does not alter any operational restrictions.	3.9.5	15.3.1.A.3.b, 15.3.1.A.3.b.(1), 15.3.1.A.3.b.(2)
3.9.6 A3	CTS required actions in the event no RHR loop is in operation when the reactor head is removed and the refueling cavity not flooded have been reflected in the ITS. This change is administrative since it does not alter any operational restrictions.	3.9.5 ACTION B, 3.9.5 Required Action B.1, 3.9.5 Required Action B.2	15.3.1.A.3.b.(2)
3.9.7 A1	Editorial changes, reformatting, and revised numbering.	3.9.6	N/A

Table L – Less Restrictive Changes
ITS Section 3.9 – Refueling Operations

DOC No.	Description of Change	ITS Requirement	CTS Requirement	Change Type
3.9.1 L1	The CTS requirement to continuously monitor radiation levels in fuel handling areas, the containment, and spent fuel storage pool, and the associated actions, have been deleted.	N/A	15.3.8.2, 15.3.8.9	1
3.9.2 NONE	NONE	NONE	NONE	NONE
3.9.3 L1	CTS Channel Calibration requirements for neutron source range instrument channels have been modified in ITS by a Note that excludes the neutron detectors from the calibration.	SR 3.9.2.2 Note	N/A	3
3.9.3 L2	The CTS frequency for performance of a Check of the neutron monitors is increased by four hours under ITS from "once per shift," to every 12 hours.	SR 3.9.2.1	Table 15.4.1-1 Item 3.1	3
3.9.3 L3	The CTS requirements to cease refueling operations and operations which may increase the reactivity of the core for an inoperable source range audible count rate circuit have not been retained in ITS. ITS Required Action C.1 will direct isolation of unborated water sources, consistent with the STS.	3.9.3, Required Action C.1	15.3.8.9	4
3.9.4 L1	The method required by CTS for verification if Containment Purge and Vent capability is relaxed in the ITS to allow either an actual or simulated actuation signal, and the frequency has been extended to once per 18 months.	SR 3.9.3.2	15.3.8.7	3
3.9.4 L2	CTS Actions when requirements for the equipment hatch and personnel locks are not met are relaxed under ITS to only include the immediate suspension of Core Alterations and movement of irradiated fuel assemblies within containment.	3.9.3 ACTION A, 3.9.3 Required Action A.1, 3.9.3 Required Action A.2	15.3.8.9	4
3.9.4 L3	CTS requirements for the primary containment airlocks are relaxed under ITS to require that one door in each airlock be capable of being closed during Core Alterations, and during the movement of irradiated fuel assemblies within containment, consistent with the STS.	3.9.3.b	15.3.8.1	1

CHANGE TYPES

1. Relaxation of LCO Requirement
2. Relaxation of Applicability
3. Relaxation of Surveillance Requirement
4. Relaxation of Required Action
5. Relaxation of CTS Reporting Requirements
6. Relaxation of Completion Time
7. Deletion of Requirements Redundant to Regulations

Table L – Less Restrictive Changes
ITS Section 3.9 – Refueling Operations

DOC No.	Description of Change	ITS Requirement	CTS Requirement	Change Type
3.9.4 L4	The Applicability of CTS requirements related to closure of containment penetrations during refueling operations has been relaxed under the ITS to be applicable during Core Alterations, thereby excluding movement of components other than irradiated fuel within containment from the Applicability.	3.9.3	15.3.8.1 (1st SR)	2
3.9.5 NONE	NONE	NONE	NONE	NONE
3.9.6 NONE	NONE	NONE	NONE	NONE
3.9.7 NONE	NONE	NONE	NONE	NONE

CHANGE TYPES

1. Relaxation of LCO Requirement
2. Relaxation of Applicability
3. Relaxation of Surveillance Requirement
4. Relaxation of Required Action
5. Relaxation of CTS Reporting Requirements
6. Relaxation of Completion Time
7. Deletion of Requirements Redundant to Regulations

Table M – More Restrictive Changes
ITS Section 3.9 – Refueling Operations

DOC No.	Description of Change	ITS Requirement	CTS Requirement
3.9.1 M1	The CTS LCO applicability for minimum boron concentration during refueling is expanded from "during refueling operations, during reactor vessel head removal and while loading and unloading fuel from the reactor," to the more encompassing ITS definition of MODE 6.	3.9.1	15.3.8.5
3.9.1 M2	CTS requirements for minimum reactor coolant Boron concentration during refueling are expanded under ITS from to also include the refueling canal and refueling cavity.	3.9.1	15.3.8.5
3.9.1 M3	The CTS requirement to take and analyze a reactor coolant sample twice per week is increased under ITS to require verification that the reactor coolant boron concentration is within the limits of the COLR on a 72 hours basis.	SR 3.9.1.1	Table 15.4.1-2 Item 2
3.9.2 NONE	NONE	NONE	NONE
3.9.3 M1	The CTS requirement that nuclear instrumentation be operable during refueling operations has been modified under ITS to require nuclear instrumentation operability in ITS Mode 6, which is a broader operational condition.	3.9.2	15.3.8.3
3.9.3 M2	The CTS requirement to continuously monitor core subcritical neutron flux is modified under ITS to also require operability of both source range monitors during positive reactivity additions in addition to being required during changes in core geometry.	3.9.2	15.3.8.3
3.9.3 M3	The CTS requirement for one Source Range monitor to provide audible indication whenever core geometry is being changed is modified by the ITS to require one Source Range audible count rate circuit be OPERABLE under the broader operational definition of Mode 6.	3.9.2	15.3.8.3
3.9.3 M4	The CTS provision allowing continued operations involving addition of positive reactivity when one source range monitor is inoperable during refueling operations is modified by the ITS to require suspension of Core Alterations and positive reactivity additions.	3.9.2	15.3.8.3
3.9.3 M5	The CTS requirement to cease reactor refueling when requirements for monitoring core subcritical neutron flux are not met is expanded under ITS to require immediate suspension of Core Alterations and positive reactivity additions.	3.9.2 ACTION A, 3.9.2 Required Action A.1, 3.9.2 Required Action A.2	15.3.8.9
3.9.3 M6	CTS is revised to provide additional actions if both source range monitors are inoperable. The ITS will require immediate initiation of actions to restore one source range neutron flux monitor to operable status, and verification that boron concentration is within limits.	3.9.2 ACTION B, 3.9.2 Required Action B.1, 3.9.2 Required Action B.2	15.3.8.9

Table M – More Restrictive Changes
ITS Section 3.9 – Refueling Operations

DOC No.	Description of Change	ITS Requirement	CTS Requirement
3.9.3 M7	CTS required actions ~~is revised to provide additional actions~~ to address the loss of the audible source range count rate are revised by requiring immediate initiation of actions to isolate all unborated water sources ~~and to immediately suspend Core Alterations~~ under ITS.	3.9.2 ACTION C, 3.9.2 Required Action C.1	N/A
3.9.4 M1	CTS is modified to add a weekly verification that each required containment penetration is in the required status through adoption of ITS SR 3.9.3.1.	SR 3.9.3.1	15.3.8.7 (2nd SR)
3.9.4 M2	CTS allows the continuation of refueling operations, with or without the isolation of the containment penetrations, when the Containment Purge and Vent System is inoperable. ITS will require Core Alterations and movement of irradiated fuel assemblies to be suspended if a containment penetration is not in the required status.	3.9.3 ACTION A, 3.9.3 Required Action A.1, 3.9.3 Required Action A.2	15.3.8.8
3.9.4 M3	CTS requires that, "The equipment hatch shall be closed." ITS further defines equipment hatch closure to require "...held in place with all bolts."	3.9.3.a	15.3.8.1
3.9.5 M1	The CTS allowance for one RHR loop out of service during refueling operations when the reactor vessel head is removed and the refueling cavity is flooded is modified under ITS to require that water level is greater than or equal to 23 ft. above the top of reactor vessel flange.	3.9.4	15.3.1.A.3.b, 15.3.1.A.3.b.(3), 15.3.8.4
3.9.5 M2	The CTS allowance to remove an RHR loop from operation for up to one hour per eight hour period during refueling operations has been modified under ITS to further stipulate "provided no operations are permitted that would cause reduction of the Reactor Coolant System boron concentration."	3.9.4 Note	15.3.8.4
3.9.5 M3	ITS SR 3.9.4.1 is added to demonstrate that one RHR loop is in operation and circulating reactor coolant in Mode 6 with greater than or equal to 23 ft. of water above the top of reactor vessel flange.	SR 3.9.4.1	N/A
3.9.6 M1	ITS adds requirements to immediately initiate action to restore required RHR loops to operable status, OR to establish greater than or equal to 23 feet of water above the top of the reactor vessel flange in Mode 6.	3.9.5 ACTION A, 3.9.5 Required Action A.1, 3.9.5 Required Action A.2	N/A
3.9.6 M2	The ITS adds surveillance requirements for demonstration that one RHR loop is in operation and circulating reactor coolant, and verification of the availability of the required RHR pump that is not in operation in Mode 6 with less than 23 ft. of water above the top of reactor vessel flange.	SR 3.9.5.1, SR 3.9.5.2	N/A

Table M – More Restrictive Changes
ITS Section 3.9 – Refueling Operations

DOC No.	Description of Change	ITS Requirement	CTS Requirement
3.9.7 M1	ITS adds a minimum requirement for the refueling cavity water level during the movement of irradiated fuel assemblies within containment and during the performance of Core Alterations (except during latching and unlatching of control rod drive shafts).	3.9.6, 3.9.6 ACTION A, 3.9.6 Required Action A.1, 3.9.6 Required Action A.2	N/A
3.9.7 M2	ITS adds a surveillance requirement to provide verification of a minimum water level of 23 feet above the top of the reactor vessel flange during Core Alterations (except latching/unlatching of control rods) and movement of irradiated fuel assemblies within containment.	SR 3.9.6.1	N/A

Table R – Relocated Specifications and Removed Details
ITS Section 3.9 – Refueling Operations

Doc No.	CTS Requirement	Description of Relocated Requirements	Location	Change Control Process	Change Type
3.9.1 LA1	15.1.g.3), 15.3.8.5	Details in the CTS specifying the minimum boron concentration for refueling, and reactivity parameters needed to establish the refueling shutdown condition.	3.9.1 Bases, COLR	Bases Control Program described in ITS 5.5.13. COLR Program described in ITS 5.6.4.	1
3.9.1 R1	15.3.8.6, 15.3.8.9	CTS requirements for Communications during core alterations.	TRM	10 CFR 50.59	N/A
3.9.1 R2	Table 15.4.1-1 Item 3.1	CTS requirements for Refueling Equipment interlocks and operability.	TRM	10 CFR 50.59	N/A
3.9.2 NONE	NONE	NONE	NONE	NONE	NONE
3.9.3 NONE	NONE	NONE	NONE	NONE	NONE
3.9.4 NONE	NONE	NONE	NONE	NONE	NONE
3.9.5 NONE	NONE	NONE	NONE	NONE	NONE
3.9.6 NONE	NONE	NONE	NONE	NONE	NONE
3.9.7 NONE	NONE	NONE	NONE	NONE	NONE

CHANGE TYPES

1. Details of System Design and System Description including Design Limits
2. Description of System or Plant Operation
3. Procedural Details for Meeting TS Requirement and Relocated Reporting Requirements
4. Relocated Redundant Requirements

Table A – Administrative Changes
ITS Section 4.0 – Design Features

DOC No.	Description of Change	ITS Requirement	CTS Requirement
4.0 A1	Editorial changes, reformatting, and revised numbering of CTS requirements for design features.	4.1, 4.2, 4.2.1, 4.2.2, 4.3, 4.3.1.1, 4.3.1.1.a, 4.3.1.1.a.1, 4.3.1.1.a.2, 4.3.1.1.b, 4.3.1.2, 4.3.1.2.a, 4.3.1.2.c	15.5.1, 15.5.3.A, 15.5.3.A.1, 15.5.3.A.4, 15.5.4, 15.5.4.2
4.0 A2	Removes the introductory Applicability statement at the beginning of each CTS section. These statements were strictly informational and did not establish any regulatory requirements.	4.0 title, 4.1 title, 4.2 title, and 4.3 title	15.5.1 Applicability, 15.5.3 Applicability, 15.5.4 Applicability
4.0 A3	Removes the introductory Objective statement at the beginning of each CTS section. These statements were strictly informational and did not establish any regulatory requirements.	N/A	15.5.1 Objective, 15.5.3 Objective, 15.5.4 Objective
4.0 A4	CTS provides references to various FSAR sections that are not being retained in ITS because they do not establish a regulatory requirement. Therefore, deletion of these references is administrative.	N/A	15.5.3 References
4.0 A5	The approved spent fuel storage pool capacity is not included in the CTS, but is contained in License Condition 3.E of Operating Licenses for Point Beach Units 1 and 2. The approved spent fuel pool capacity is being added to the ITS. As this ITS provision is duplicative of an existing License Condition and does not modify any operational restrictions this change is administrative.	4.3.8	Facility Operating Licenses DPR-24 and 27, Condition 3.E

Table L – Less Restrictive Changes
ITS Section 4.0 – Design Features

DOC No.	Description of Change	ITS Requirement	CTS Requirement	Change Type
4.0 L1	ITS adds a provision allowing limited use of lead test assemblies in non-limiting locations in the reactor core that did not exist in the CTS. Also, specific details related to the fuel types used at PBNP are also replaced with a general provision that fuel assembly types be limited to those analyzed with NRC approved codes.	4.2.1	15.5.3.A.1, 15.5.3.A.2	1

CHANGE TYPES

1. Relaxation of LCO Requirement
2. Relaxation of Applicability
3. Relaxation of Surveillance Requirement
4. Relaxation of Required Action
5. Relaxation of CTS Reporting Requirements
6. Relaxation of Completion Time
7. Deletion of Requirements Redundant to Regulations

Table M – More Restrictive Changes
ITS Section 4.0 – Design Features

DOC No.	Description of Change	ITS Requirement	CTS Requirement
4.0 M1	A description of design requirements for the spent fuel storage pool that limit inadvertent drainage of the pool has been added to the ITS.	4.3.2	N/A
4.0 M2	CTS does not contain parameter specific design criteria related to spacing of fuel stored in the spent fuel and new fuel storage racks. The nominal fuel spacing for the these racks has been added to the ITS consistent with the STS.	4.3.1.1.c, 4.3.1.1.d	15.5.4.2
4.0 M3	CTS does not contain a design restriction for the new fuel storage racks that K_{eff} be maintained = 0.98 under optimum moderator density conditions. This design restriction has been added to the ITS.	4.3.1.2.c	N/A

Table R – Relocated Specifications and Removed Details
ITS Section 4.0 – Design Features

Doc No.	CTS Requirement	Description of Relocated Requirements	Location	Change Control Process	Change Type
4.0 LA1	15.5.2, 15.5.2.A, 15.5.2.A.1, 15.5.2.A.2, 15.5.2.B, 15.5.2.B.1, 15.5.2.B.2, 15.5.2.C, 15.5.2.C.1, 15.5.2.C.2	CTS descriptions of design features for the Containment System that do not establish a regulatory requirement, but rather provide a description of plant equipment/design information.	FSAR	10 CFR 50.59	1
4.0 LA2	15.5.3.A.1, 15.5.3.A.2, 15.5.3.A.3, 15.5.3.A.4, 15.5.3.A.2, 15.5.3.A.6, 15.5.3.B, 15.5.3.B.1, 15.5.3.B.2, 15.5.3.B.2.a, 15.5.3.B.2.b, 15.5.3.B.3, 15.5.4.2	The explicit description of fuel assembly type and design, as well as core design and configuration characteristics, and new fuel storage vault characteristics.	FSAR	10 CFR 50.59	1
4.0 LA3	15.5.4.1, 15.5.4.2	Certain information in the CTS related to design and characteristics of the new fuel and spent fuel storage racks.	FSAR	10 CFR 50.59	1
4.0 LA4	Figure 15.7.2-1	The site map, information, and effluent release points.	FSAR	10 CFR 50.59	1

CHANGE TYPES

1. Details of System Design and System Description including Design Limits
2. Description of System or Plant Operation
3. Procedural Details for Meeting TS Requirement and Relocated Reporting Requirements
4. Relocated Redundant Requirements

Table A – Administrative Changes
ITS Section 5.0 – Administrative Controls

DOC No.		Description of Change	ITS Requirement	CTS Requirement
5.1	A1	Editorial changes, reformatting, and revised numbering of CTS administrative control requirements for Responsibility.	5.1.1	15.6.1.1
5.2	A1	Editorial changes, reformatting, and revised numbering of CTS administrative control requirements for Organization.	5.2.1, 5.2.1.a, 5.2.1.b, 5.2.1.c, 5.2.1.d	15.6.2.1, 15.6.2.1.a, 15.6.2.1.b, 15.6.2.1.c, 15.6.2.1.d
5.2	A2	CTS staffing requirements for the facility staff have been equivalently reflected in the ITS. These changes do not alter any operational restrictions and are administrative..	5.1.2, 5.2.2.a, 5.2.2.b, 5.2.2.c, 5.2.2.d,	15.6.2 Footnote **, 15.6.2.2.a.1, 15.6.2.2.a.2, 15.6.2.2.a.5, 156.2.2.d
5.2	A3	The CTS description of qualification requirements for the Shift Technical Advisor (STA) have been reflected in the ITS, making this change administrative.	5.2.2.e	15.6.3.4
5.2	A4	The CTS description of qualification requirements for the Operations Manager have been equivalently reflected in the ITS. This change does not alter any operational restrictions and is administrative.	5.2.2.d	15.6.3.5
5.3	A1	CTS requirements related to ensuring plant staff meets minimum qualifications have been reflected in the ITS through the adoption of equivalent STS requirements. Therefore, this change is administrative.	5.3.1, 5.3.3	15.6.3.2, 15.6.3.3
5.3	A2	ITS clarifies the definition for licensed senior reactor operator and licensed reactor operator. This change merely clarifies current plant practice and is, therefore, administrative.	5.3.2	N/A
5.3	A3	Editorial changes, reformatting, and revised numbering of CTS administrative control requirements for Facility Staff Qualifications.	5.3	15.6.5.1, ——15.6.6
5.4	A1	Editorial changes, reformatting, and revised numbering of CTS administrative control requirements for Procedures.	5.4.1	15.6.8.1
5.4	A2	The CTS requirement to have procedures for quality assurance of effluent and environmental monitoring have been reflected in the ITS.	5.4.1.i	15.6.8.1, 15.7.8.3
5.5	A1	Deletion of the listed CTS sections which only contain statements that the information previously contained therein has been moved to the Radiological Effluents and Materials Control and Accountability Program Manual (REMCAP). This manual is part of the ITS controlled Offsite Dose Calculation Manual (ODCM). Thus, deletion of these sections is an administrative change because it does not alter any operational restrictions.	N/A	15.3.9, 15.4.10, 15.7.3, 15.7.4, 15.7.5, 15.7.6, 15.7.7

Table A – Administrative Changes
ITS Section 5.0 – Administrative Controls

DOC No.	Description of Change	ITS Requirement	CTS Requirement
5.5 A2	Information contained in the CTS stating that the RETS does not expand the responsibilities of the licensed operators, and the material contained therein will not be the subject of SRO/RO licensing examinations has not been retained in the ITS. This change does not alter any operational restrictions and is therefore administrative.	N/A	15.7
5.5 A3	The CTS described Environmental Manual will be incorporated into the ITS controlled ODCM. This change does not alter any operational restrictions and is therefore administrative.	5.5.1.a, 5.5.1.b	15.7.8.3.a
5.5 A4	Editorial changes, reformatting, and revised numbering of CTS administrative control requirements for Programs and Manuals.	5.5.1, 5.5.3, 5.5.4, 5.5.5, 5.5.7, 5.5.8, 5.5.9, 5.5.10, 5.5.15, 5.5.16,	15.4.2 (all), 15.4.2.A.2.(a).2, 15.4.2.A.2.(b), 15.4.2.A.4.(d), 15.4.2.A.4.(e), Table 15.4.2-1, 15.4.11.4.a, 15.4.11.4.b, 15.4.11.4.d, Table 15.4.16-1 Footnote (a), 15.6.8.4.A.(i), 15.6.8.4.A.(ii), 15.6.8.4.A.(iii), 15.6.12 (all), 15.7.5 (all), 15.7.8 (all), 15.7.8.3.b.1), 15.7.8.3.b.2), DPR-24/27 OL 3.I, DPR-24/27 OL 3.I.1, DPR-24/27 OL 3.I.2, DPR-24/27 OL 3.I.3, DPR-24/27 OL 3.I.4, DPR-24/27 OL 3.I.5, DPR-24/27 OL 3.I.6, Bases

Table A – Administrative Changes
ITS Section 5.0 – Administrative Controls

DOC No.	Description of Change	ITS Requirement	CTS Requirement
5.5 A5	CTS requirements for the REMCAP, EM, REMP, and RECP have been modified to reflect their incorporation into the ITS controlled ODCM. These changes do not alter any operational restrictions and are administrative.	5.5.4, 5.5.4.c, 5.5.1.a, 5.5.1.c, 5.5.1.d, 5.5.1.c.1, 5.5.1.c.3	15.7.8.3, 15.7.8.3.b, 15.7.8.3.b.2), 15.7.8.3.c), 15.7.8.7.B, 15.7.8.3.B.1, 15.7.8.3.B.3
5.5 A6	The CTS requirement that changes regarding explosive gas be made via the 10 CFR 50.59 process is deleted because changes to the program for Explosive Gas Monitoring will be controlled by 10 CFR 50.59 by virtue of its inclusion in the TRM.	N/A	15.7.8.7.b.4)
5.5 A7	The listed CTS footnotes regarding the Post Accident Sampling System do not establish any program requirements and are deleted. This change does not alter any operational restrictions and is therefore administrative.	5.5.3	15.6.8.4.a Footnote * and Footnote **
5.5 A8	CTS requirements for RCS PIV leakage contained in the listed footnotes are retained in ITS 5.5.16.	5.5.16	Table 15.4.16-1 Footnotes (a) and (b)
5.5 A9	The CTS contains definitions related to steam generator tubes that have not been retained in the ITS since they are no longer relevant following replacement of the Unit 2 steam generators. This change does not alter any operational restrictions and is administrative.	5.5.8.e	15.4.2.A.2.(e), 15.4.2.A.5.(a), 15.4.2.A.6
5.5 A10	The CTS has been modified under ITS by replacing a reference to CTS 15.4.2.b.1 with an equivalent reference to 10 CFR 50.55a(g) for Inservice Inspection (ISI) requirements.	5.5.8.c	15.4.2.A.3
5.5 A11	CTS requirements for in-place testing of the HEPA and charcoal adsorber banks has been revised in the ITS to require less than or equal to 1.0% penetration in lieu of the equivalent 99% removal criteria in CTS. This change does not alter any operational restrictions and is administrative.	5.5.10.a, 5.5.10.b, 5.5.12.c	15.3.12.2.a, 15.3.12.2.b
5.5 A12	The CTS provides brief introductory statements that convey the scope and purpose of the requirements covered in these sections (ISI and radioactive effluent release and explosive gas concentration limits) and do not establish any regulatory requirements; this information is adequately conveyed in the titles of the corresponding ITS programs. This change does not alter any operational restrictions and is therefore administrative.	titles for 5.5.4, 5.5.7, and 5.5.11	15.4.2 Applicability, 15.4.2 Objective, 15.7.5 Applicability, 15.7.5 Objective,
5.5 A13	Editorial changes have been made to the CTS to clarify the ITS diesel fuel oil testing program. These changes do not alter any operational restrictions and are administrative.	5.5.12	15.4.6.A.6

Table A – Administrative Changes
ITS Section 5.0 – Administrative Controls

DOC No.	Description of Change	ITS Requirement	CTS Requirement
5.6 A1	Editorial changes, reformatting, and revised numbering of CTS administrative controls for Reporting Requirements.	5.6	15.4.4.II.D, 15.6.9, 15.6.9.1.B, 15.6.9.1.B.1, 15.6.9.1.B.2.a, 15.6.9.1.C 15.6.9.2, 15.7.8.4
5.6 A2	CTS reporting requirements for steam generator tube inservice inspection results have been retained in the ITS. This change is administrative.	5.6.8	15.4.2.A.7 15.6.9.B.2.a Table 15.4.2-1
5.6 A3	Portions of the CTS required "Annual Results and Data Report" have been reflected in the "Occupational Radiation Exposure Report" under ITS. This change is administrative.	5.6.1	15.6.9.1.B.2.b
5.6 A4	CTS requirements related to the "Radiological Effluent Control Program (RECP)" have been incorporated into the "Radioactive Effluent Release Report" under ITS." This change is administrative.	5.6.2	15.7.8.4.A.1
5.6 A5	CTS requirements related to the "Radiological Effluents Monitoring program (REMP)" have been incorporated into the "Annual Radiological Environmental Operating Report" under ITS." This change is administrative.	5.6.2	15.7.8.4.A.3
5.6 A6	Not used.	N/A	N/A
5.6 A7	Not used.	N/A	N/A
5.7 A1	Editorial changes, reformatting, and revised numbering of CTS administrative controls for high radiation areas.	5.7	15.6.11

Table L – Less Restrictive Changes
ITS Section 5.0 – Administrative Controls

DOC No.	Description of Change	ITS Requirement	CTS Requirement	Change Type
5.1 L1	CTS requirements have been relaxed in the ITS to allow a licensed Reactor Operator to assume the control room command function when both units are in Mode 5 or 6.	5.1.2	15.6.2.2.b	1
5.2 LB1	CTS requirements for facility staffing are duplicative of regulatory requirements and have not been retained in the ITS.	N/A	15.6.2.2.a.3, 15.6.2.2.a.4, 15.6.2.2.e	7
5.3 LB1	CTS requirements for the retraining and replacement training program for the facility staff are encompassed by regulatory requirements, 10 CFR 55, and have not been retained in the ITS.	N/A	15.6.4.1	7
5.4 NONE	NONE	NONE	NONE	NONE
5.5 LB1	CTS requirements to establish and maintain a Process Control Program (PCP) are duplicative of regulatory requirements (10 CFR Parts 20, 61, and 71) and have not been retained in the ITS.	N/A	15.7.8.3.d, 15.7.8.7.A	7
5.5 LB2	Not used.	N/A	N/A	N/A
5.5 LB3	The CTS End Anchorage Concrete Surveillance requirements are duplicative of inservice inspection regulatory requirements and are not being retained in the ITS.	N/A	15.4.4.III	7
5.5 LB4	The CTS Liner Plate examination requirements are duplicative of inservice inspection regulatory requirements and are not being retained in the ITS.	N/A	15.4.4.IV	7
5.5 LB5	The CTS Inservice Inspection requirements, for safety class components other than steam generator tubes are duplicative of regulatory requirements and are not being retained in the ITS.	N/A	15.4.2.B	7

CHANGE TYPES

1. Relaxation of LCO Requirement
2. Relaxation of Applicability
3. Relaxation of Surveillance Requirement
4. Relaxation of Required Action
5. Relaxation of CTS Reporting Requirements
6. Relaxation of Completion Time
7. Deletion of Requirements Redundant to Regulations

Table L – Less Restrictive Changes
ITS Section 5.0 – Administrative Controls

DOC No.	Description of Change	ITS Requirement	CTS Requirement	Change Type
5.5 LB6	The CTS listing of regulations for control of radioactive effluents; control of the release of, and processing of waste materials; and the assessment of radioactivity in the environs are duplicative of regulatory requirements and has not been retained in the ITS.	N/A	15.7.8.3	7
5.6 L1	CTS reporting requirements for extended inoperability of a main steam radiation monitor have not been retained in the ITS because the other CTS requirements for this monitor are not retained in ITS 3.3.3 (addressed by DOC No. 3.3.3-L2).	N/A	15.6.9.2.E	5
5.6 L2	CTS reporting requirements for new and spent fuel receipts and shipment have not been retained in the ITS.	N/A	15.7.8.4.A.2	5
5.6 L3	CTS administrative requirements for keeping meteorological data filed on site have not be retained in the proposed ITS.	N/A	15.7.8.4.A.5	5
5.6 L4	The CTS requirement to report events involving operation of the LTOP system to relieve pressure transients have not been retained in the ITS.	N/A	15.6.9.2.C	5, 7
5.6 L5	The CTS requirement to report a tabulation of events involving challenges to the pressurizer power operated relief valves or pressurizer safety valves has not been retained in the ITS.	N/A	15.6.9.1.B.2.d	5
5.6 L6	CTS details related to the content of the Monthly Operating Report have been deleted.	5.6.3	15.6.9.1.C.1, 15.6.9.1.C.2	5
5.6 L7	Reporting requirements in the CTS for planned removal of any poison assemblies from the spent fuel storage racks have been deleted.	N/A	15.6.9.2.B	5

CHANGE TYPES

1. Relaxation of LCO Requirement
2. Relaxation of Applicability
3. Relaxation of Surveillance Requirement
4. Relaxation of Required Action
5. Relaxation of CTS Reporting Requirements
6. Relaxation of Completion Time
7. Deletion of Requirements Redundant to Regulations

Table L – Less Restrictive Changes
ITS Section 5.0 – Administrative Controls

DOC No.	Description of Change	ITS Requirement	CTS Requirement	Change Type
5.6 LB1	The CTS requirement to submit a summary report to the NRC of plant startup and power escalation testing under specified conditions is either no longer applicable or is duplicative of regulatory requirements (10 CFR 50.4, 50.59, and 50.90) and has not been retained in the ITS.	N/A	15.6.9.1.A	7
5.6 LB2	The CTS requirement that the Annual Results and Data Report shall include a description of facility changes, tests or experiments is duplicative of regulatory requirements, 10 CFR 50.59(b)(2), and has not been retained in the ITS.	N/A	15.6.9.1.B.2.c	7
5.6 LB3	Reporting requirements in the CTS related to leak testing of sealed sources if the tests reveal the presence of removable contamination are duplicative of regulatory requirements (10 CFR 31.5) and have not been retained in the ITS.	N/A	15.7.8.4.A.4	7
5.6 LB4	The CTS requirement, "A description of changes to the REMCAP, ODCM, EM, RECM or PCP which were implemented and became effective during the reporting period shall be submitted" is duplicative of regulatory requirements (10 CFR 50.4, 50.59, and 50.90) and the ODCM and has not been retained in the ITS.	5.5.1	15.7.8.4.A.6	7
5.7 LB1	The CTS requirement that the radiation protection program shall meet the requirements of 10 CFR 20 is duplicative of regulatory requirements and has not been retained in the ITS.	5.7	15.6.11	7
5.7 LB2	CTS requirements for radiological control procedures that are either implicitly satisfied or duplicative of regulatory requirements, and have not been retained in the ITS.	5.4.1.a	15.6.11	7

CHANGE TYPES

1. Relaxation of LCO Requirement
2. Relaxation of Applicability
3. Relaxation of Surveillance Requirement
4. Relaxation of Required Action
5. Relaxation of CTS Reporting Requirements
6. Relaxation of Completion Time
7. Deletion of Requirements Redundant to Regulations

Table M – More Restrictive Changes
ITS Section 5.0 – Administrative Controls

DOC No.		Description of Change	ITS Requirement	CTS Requirement
5.1	M1	Specific time frames and methods of complying with CTS requirements for delegation of Plant Manager responsibilities have not been retained. The ITS will require delegation in writing regardless of plant Manager absence time frames involved or contact availability.	5.1.1	15.6.1.1
5.1	M2	The CTS description of the Control Room Command function is expanded in the ITS to specify in greater detail who has the Control Room Command function during absence of the Shift Supervisor, and qualification requirements based on the operational condition of the unit.	5.1.2	15.6.1.2
5.1	M3	Addition of the STS requirement that "The Plant Manager or his designee shall approve, prior to implementation, each proposed test, experiment or modification to systems or equipment that affect nuclear safety." This requirement does not appear in the CTS.	5.1.1	15.6.1.1
5.2	M1	Addition of the "individuals who train the operating staff" to the CTS listed functions that shall have independence from operating pressures.	5.2.1.d	15.6.2.1.d
5.3	M1	Adds the requirement "as supplemented by Regulatory Guide 1.8, Revision 1, September 1975" to the CTS requirement that the facility staff shall meet or exceed the minimum qualifications of ANSI N18.1-1971.	5.3.1	15.6.3.1
5.3	M2	Not used	N/A	N/A
5.4	M1	The ITSs adopt the STS requirement to have procedures established for "the programs specified in Specification 5.5," which did not explicitly exist in the CTS.	5.4.1.j	15.6.8.1
5.5	M1	The CTS description of Post Accident Sampling System program requirements is revised by the ITS to add radioactive gases and particulates to the scope of containment atmosphere and in plant gaseous effluent samples.	5.5.3	15.6.8.4.A
5.5	M2	The CTS has been revised by the addition of a requirement to establish, implement and maintain a program for Primary Coolant Sources Outside Containment.	5.5.2	N/A
5.5	M3	The CTS requirement to perform pressure drop testing of the combined HEPA filters and charcoal adsorber banks at the design flow rate has been modified under ITS to more specifically require testing at 4950 cfm +/- 10%.	5.5.10.d	15.4.11.1
5.5	M4	CTS has been modified by the addition of a requirement in the Radiological Effluent Program to provide limitations under ITS on the functional capability and use of the appropriate portions of the liquid and gaseous effluent treatment system.	5.5.4.f	15.7.8.3.b.5)

Table M – More Restrictive Changes
ITS Section 5.0 – Administrative Controls

DOC No.	Description of Change	ITS Requirement	CTS Requirement
5.5 M5	CTS has been modified by the addition of requirements in the ITS to require the Radioactive Effluents Control Program in the ODCM to include limitations on (1) quarterly doses and dose commitments to a member of the public from radioactive materials in liquid effluents released from each unit to unrestricted areas, conforming to 10 CFR 50,Appendix I, and (2) annual dose and dose commitments to any member of the public, beyond the site boundary, due to release of radioactivity and to radiation from uranium fuel cycle sources conforming to 40 CFR 190.	5.5.4.d, 5.5.4.j	15.7.8.3.b.5), 15.7.8.3.c
5.5 M6	The CTS has been modified by the addition of a requirement to require the Radioactive Effluents Control Program in the ODCM to include limitations on annual and quarterly air doses resulting from noble gases released in gaseous effluents from each unit to areas beyond the site boundary conforming to 10 CFR 50, Appendix I.	5.5.4.h	15.7.8.3.b
5.5 M7	CTS has been revised by the addition of a requirement in the ITS to establish, implement and maintain a Component Cyclic or Transient Limit Program.	5.5.5	N/A
5.5 M8	CTS has been revised by the addition of a requirement in the ITS to establish, implement and maintain a Reactor Coolant Pump Flywheel Inspection Program.	5.5.6	N/A
5.5 M9	CTS inservice test (IST) requirements have been modified through the adoption of a table in the ITS indicating frequencies for performing IST activities, and statements establishing the applicability of ITS SR 3.0.2 and ITS SR 3.0.3.	5.5.7.a, 5.5.7.b, 5.5.7.c	15.4.2.B.3
5.5 M10	A statement requiring the provisions of ITS SR 3.0.2 to be applicable to the Steam Generator (SG) Tube Surveillance Program surveillance frequencies has been added.	5.5.8	15.4.2.A
5.5 M11	The CTS requirement that cold DOP testing of the HEPA filter bank and halogenated hydrocarbon testing of the charcoal adsorber bank of the Control Room Emergency Filter system be performed at the design velocity +/- 20%, has been modified under ITS to more specifically require testing at 4950 cfm +/- 10%.	5.5.10.a, 5.5.10.b	15.4.11.4.b, 15.4.11.4.c
5.5 M12	A statement that the provisions of ITS SR 3.0.2 and SR 3.0.3 apply to the Ventilation Filter Test Program test frequencies has been added.	5.5.10	15.4.11
5.5 M13	-The ITSs contain a new requirement to establish, implement and maintain an Explosive Gas Monitoring Program.	5.5.11	15.7.5
5.5 M14	–The CTS requirement for a diesel fuel oil testing program is modified by the addition of specific testing requirements and criteria for both the acceptability testing of new fuel and periodic testing of stored fuel. Additionally, a statement is added that the provisions of ITS SR 3.0.2 and SR 3.0.3 apply to the program test frequencies.	5.5.12	15.4.6.A.6

Table M – More Restrictive Changes
ITS Section 5.0 – Administrative Controls

DOC No.	Description of Change	ITS Requirement	CTS Requirement
5.5 M15	CTS has been modified by the addition of requirements in the ITS to establish, implement and maintain a Technical Specification (TS) Bases Control program, and a Safety Function Determination Program (SFDP).	5.5.13, 5.5.14	N/A
5.5 M16	CTS requirements for the Containment Leakage Rate Testing Program have been modified by the addition of airlock testing requirements and acceptance criteria in the ITS.	5.5.15.d.3	15.6.12
5.6 M1	Deletion of redundant CTS requirement to submit specific activity analysis results when primary coolant exceeds CTS 15.3.1.C coolant activity limits; the other applicable, but more restrictive reporting requirements, 10 CFR 50.72 and 50.73, will continue to apply.~~See Table L for ITS Section 5.0.~~	N/A	15.6.9.1.B.2.e
5.6 M2	The CTS requirement that a special report be submitted if the minimum number of channels for the containment high-range radiation monitor are not restored within the allowed outage time is revised in the ITS to require submittal within 14 days, in lieu of the CTS requirement of 30 days.	5.6.6	15.6.9.2.D
5.6 M3	STS requirements for establishment and format of a Core Operating Limits Report (COLR), which did not exist in the CTS, have been adopted in the ITS.	5.6.4	N/A
5.6 M4	STS requirements for establishment and content of a Reactor Coolant System (RCS) Pressure and Temperature Limits Report (PTLR), which did not exist in the CTS, have been adopted in the ITS.	5.6.5	N/A
5.6 M5	The CTS requirement to submit a Post Accident Monitoring (PAM) Instrumentation report has been expanded as a result of instrumentation that has been added to the scope of the reporting requirement under ITS.	5.6.6	N/A
5.7 NONE	NONE	NONE	NONE

Table R – Relocated Specifications and Removed Details
ITS Section 5.0 – Administrative Controls

Doc No.	CTS Requirement	Description of Relocated Requirements	Location	Change Control Process	Change Type
5.1 NONE	NONE	NONE	NONE	NONE	NONE
5.2 NONE	NONE	NONE	NONE	NONE	NONE
5.3 LA1	15.6.5.2, 15.6.5.3	The CTS description of the composition and functional requirements of the Off-Site Review Committee (OSRC) and fire protection audit requirements.	QA Program and FPER	10 CFR 50 App B, 10 CFR 50.54.a, 10 CFR 50.48	4
5.4 LA1	15.6.8.2, 15.6.8.3	The CTS description of the procedure change review and approval process.	FSAR	10 CFR 50.59	4
5.5 LA1	15.7.1.A, 15.7.1.B, 15.7.1.C, 15.7.1.D	Information and definitions related to RETS.	ODCM	ODCM Program described in ITS 5.5.1.	4
5.5 LA2	15.7.8.3.a	Information regarding an annual milk survey.	ODCM	ODCM Program described in ITS 5.5.1.	4
5.5 LA3	15.7.8.5, 15.7.8.5.A, 15.7.8.5.B, 15.7.8.5.C, 15.7.8.5.D, 15.7.8.5.E	Information pertaining to radioactive liquid, gaseous and solid waste treatment systems.	ODCM	ODCM Program described in ITS 5.5.1.	4
5.5 LA4	15.7.8.3.a, 15.7.8.3.b	Information regarding audits of the activities encompassed by the REMCAP.	ODCM	ODCM Program described in ITS 5.5.1.	4
5.5 LA5	15.4.2 Bases	Information contained in the Bases for CTS 15.4.2 ISI and IST.	FSAR	10 CFR 50.59	1

CHANGE TYPES

1. Details of System Design and System Description including Design Limits
2. Description of System or Plant Operation
3. Procedural Details for Meeting TS Requirement and Relocated Reporting Requirements
4. Relocated Redundant Requirements

Table R – Relocated Specifications and Removed Details
ITS Section 5.0 – Administrative Controls

Doc No.	CTS Requirement	Description of Relocated Requirements	Location	Change Control Process	Change Type
5.5 LA6	15.3.12.2.a, 15.3.12.2.b, 15.4.11.1, 15.4.11.4.a, 15.4.11.4.b, 15.4.11.4.c, 15.4.11.4.d	The description of filter testing requirements and frequencies for the Control Room Emergency Filtration System.	FSAR, Program required by 5.5.10	10 CFR 50.59	4
5.5 LA7	15.7.5.A	The Gas Decay Tank oxygen concentration limit and required actions if the limit is exceeded.	TRM, Program required by 5.5.11	10 CFR 50.59	4
5.5 LA8	15.7.8.3, 15.7.8.3.a	The CTS lists regulations and the applicable GDC related to control of radioactive effluents; control of the release of, and processing of waste materials; and assessment of radioactivity in the environs.	FSAR, Program required by 5.5.4	10 CFR 50.59	4
5.5 LA9	15.4.4	Details for the Tendon Surveillance Program.	TRM, Program required by 5.5.17	10 CFR 50.55.a	3, 4
5.6 LA1	N/A	Not used.	N/A	N/A	N/A
5.6 LA2	N/A	Not used.	N/A	N/A	N/A
5.6 LA3	15.4.4.II.D, 15.6.10, 15.7.8.6	The description of administrative requirements for records and records retention.	FSAR Section 1.4	10 CFR 50.59 10 CFR 50.54(a)	4
5.6 LA4	15.7.8.4.A.7, 15.7.8.4.B, 15.7.8.4.C, 15.7.8.4.D	Details and requirements for the radioactive effluent control program.	ODCM	ODCM Program described in ITS 5.5.1	4

CHANGE TYPES

1. Details of System Design and System Description including Design Limits
2. Description of System or Plant Operation
3. Procedural Details for Meeting TS Requirement and Relocated Reporting Requirements
4. Relocated Redundant Requirements

Table R – Relocated Specifications and Removed Details
ITS Section 5.0 – Administrative Controls

Doc No.	CTS Requirement	Description of Relocated Requirements	Location	Change Control Process	Change Type
5.7 NONE	NONE	NONE	NONE	NONE	NONE

CHANGE TYPES

1. Details of System Design and System Description including Design Limits
2. Description of System or Plant Operation
3. Procedural Details for Meeting TS Requirement and Relocated Reporting Requirements
4. Relocated Redundant Requirements