RG&E SLB CONTAINMENT PRESSURE INCREASE
Why?

- Current limiting SLB Analysis (FRV failure) has little margin to 60 psig design limit
- Have to credit reduced SDM and restricted TAVE window
- RG&E desires to remove cycle specific restrictions
- Estimate need 69 psig allowable containment pressure to do this, with margin

RG&E SLB CONTAINMENT PRESSURE INCREASE
Other Considerations

- Design Pressure (LOCA) versus SLB Allowable Pressure
- Appendix J, Option "B"
- SLB Dose Analysis
- SLB Mitigation Equipment

RG&E SLB CONTAINMENT PRESSURE INCREASE
Containment Structure

- Design considerations
- Structural Integrity Tests - 1969 Test
- Structural Integrity Tests - 1996 Test
- Limiting Component for Allowable Elastic Design Stress

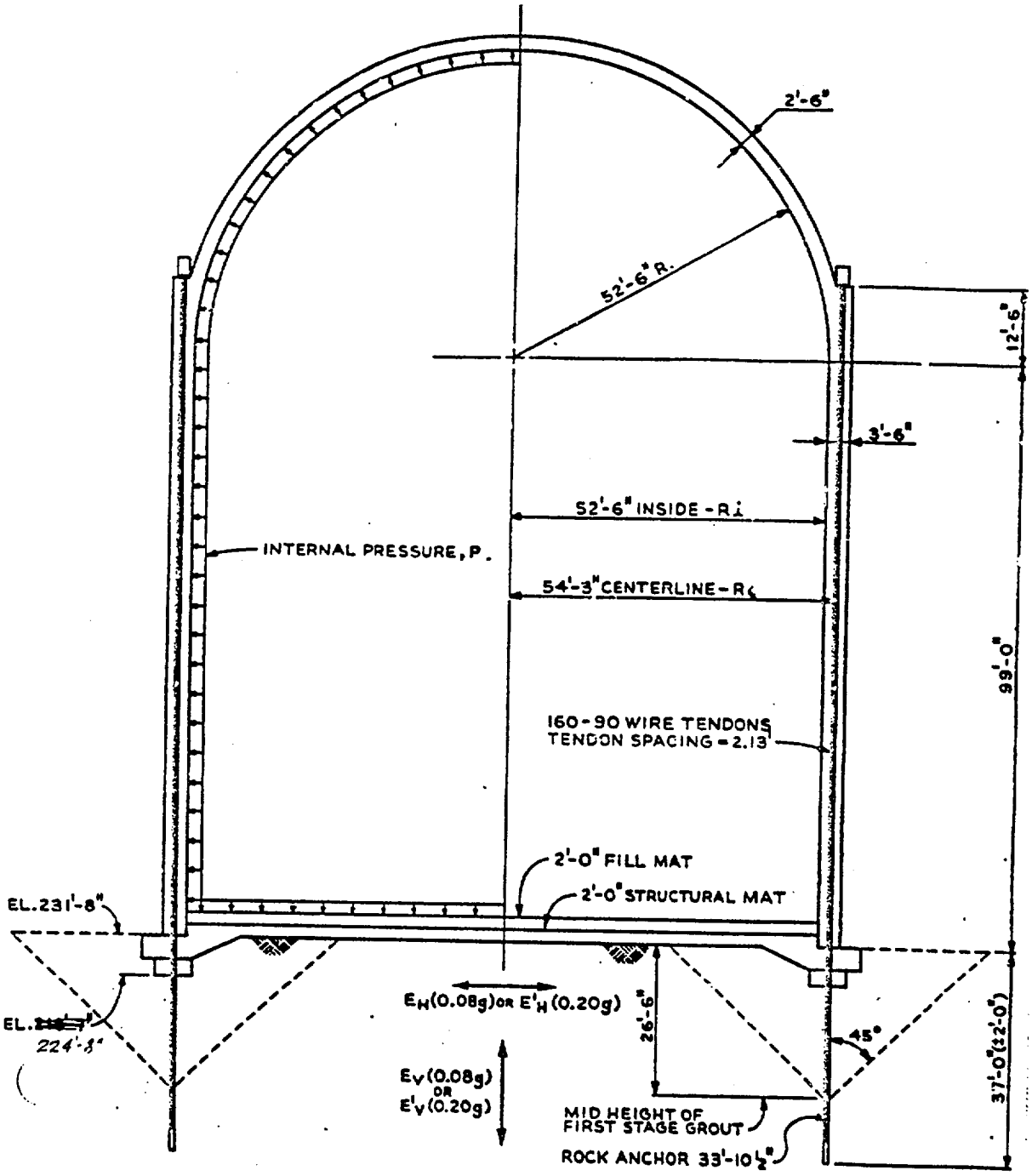

GENERAL
CROSS SECTION THROUGH
CONTAINMENT

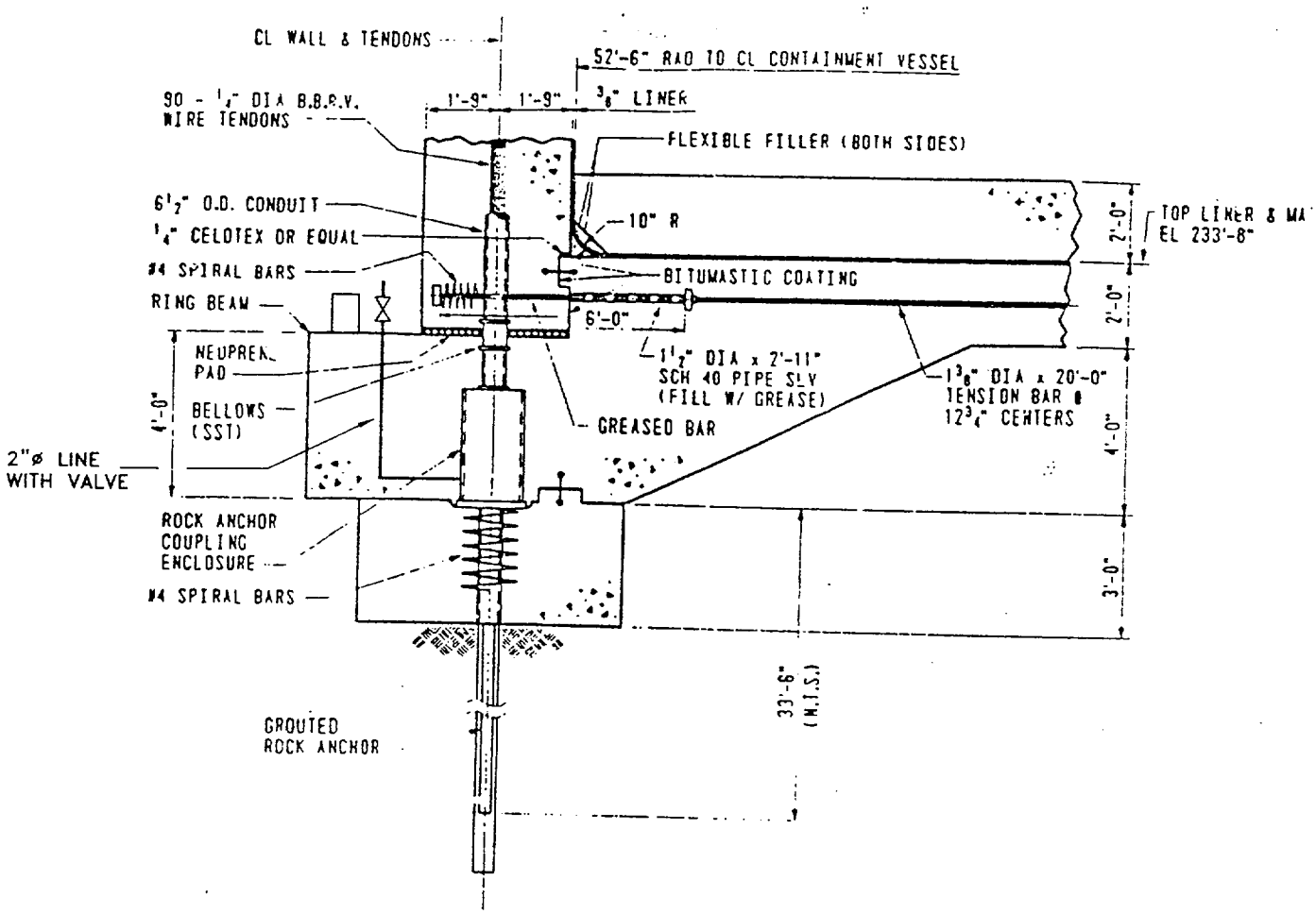

DETAIL AT CONTAINMENT FOUNDATION
SHOWING TENDON ROCK ANCHOR CONNECTION

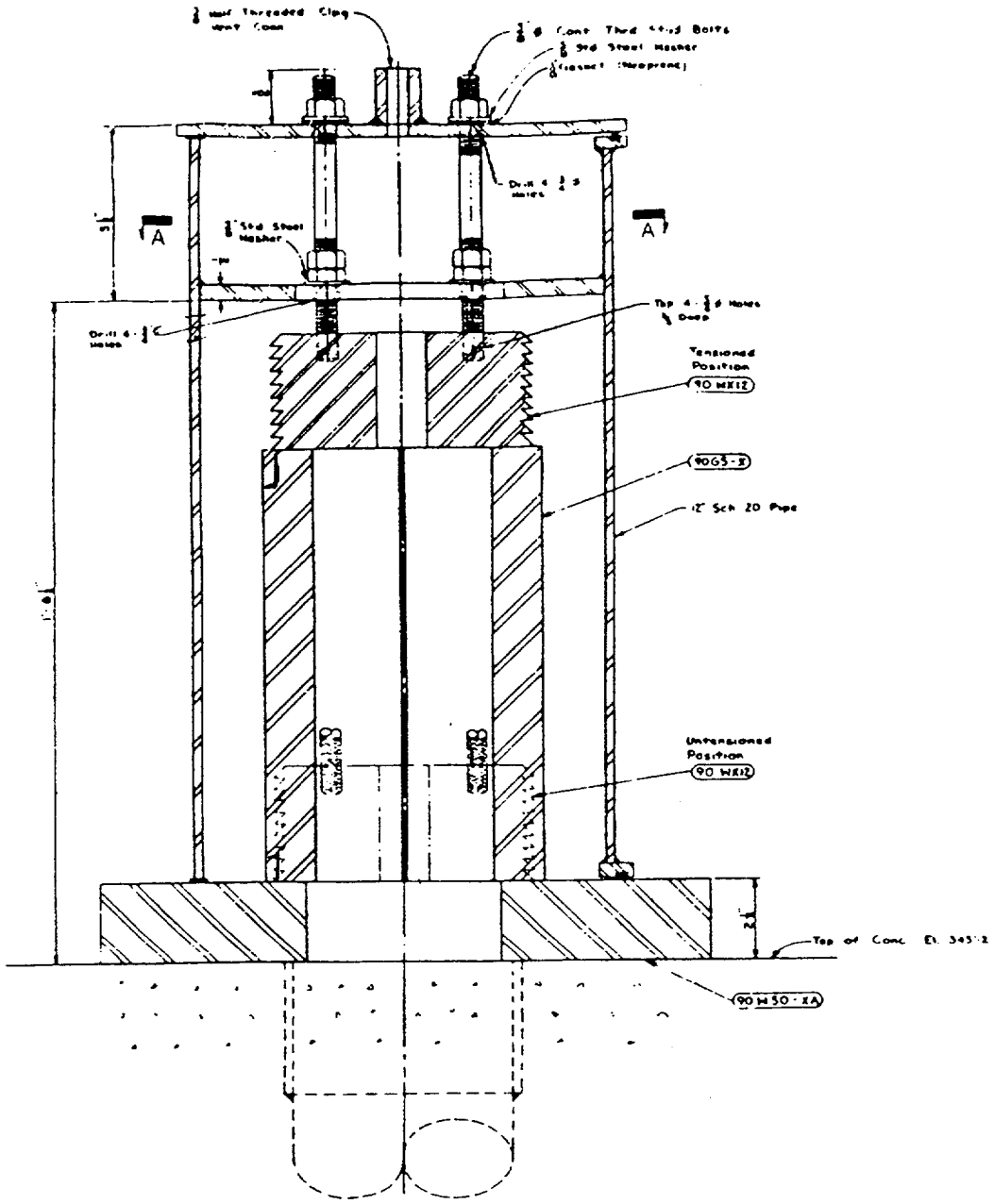

TENDON GREASE CAP DETAIL AT DOME