CEOG COMBUSTION ENGINEERING OWNERS GROUP

Westinghouse Electric Company LLC	**Calvert Cliffs Nuclear Power Plant, Inc.** Calvert Cliffs 1, 2	**Entergy Operations, Inc.** ANO 2 WSES Unit 3	Korea Hydro & Nuclear Power Company YGN 3, 4 Ulchin 3,4	**Omaha Public Power District** Ft. Calhoun
Arizona Public Service Co. Palo Verde 1, 2, 3	**Consumers Energy Co.** Palisades	**Florida Power & Light Co.** St. Lucie 1, 2	**Dominion Nuclear Connecticut, Inc.** Millstone 2	**Southern California Edison** SONGS 2,3

June 14, 2001
CEOG-01-0164

NRC Project 692

U.S. Nuclear Regulatory Commission
Attn: Document Control Desk
Washington, DC 20555-0001

Subject: **Transmittal of Approved Topical Report CE NPSD-1184-A, Rev 00, "Joint Applications Report for DC Power Source Allowed Outage Time Extension," CEOG Task 849, dated May 2001**

Reference: S. A. Richards, NRC, to R. Bernier, CEOG, "Joint Applications Report for DC Power Source Allowed Outage Time Extension," Final Report, CEOG Task 849, March 2000 (TAC No. MA8517), letter dated May 9, 2001

The CEOG is pleased to transmit herewith one (1) unbound and two (2) bound copies of approved topical report CE NPSD-1184-A, Rev 00. Transmittal of this approved report was requested by the NRC in the Reference letter.

CE NPSD-1184-A, Rev 00 provides the results of a probabilistic safety assessment for extending the allowed outage time for DC power sources. The NRC safety evaluation identifies the acceptability of the PSA results to the plants referenced in the Joint Applications Report and identifies any additional information required to be provided when the plant-specific licensee amendment requests are submitted to the NRC for approval.

Please do not hesitate to call me at 623-393-5882 or Gordon Bischoff, CEOG Project Office, at 860-285-5494 if you have any questions.

Sincerely,

Richard G. Bernier

Richard Bernier
Chairman, CE Owners Group

Attachment: As Stated
cc w/2 copies: J. S. Cushing (OWFN, 4D-7)

D047

Additional Distribution:

R. Weston (W)
R. Schneider (W)
L. Arnold (W, PIC)
P. Hijeck (CEOG)
CEOG Library

cc w/o copy:

P. Leombruni
P. Richardson
D. Whipple (W)
G. Bischoff (CEOG)
CEOG Management Committee

CEOG COMBUSTION ENGINEERING OWNERS GROUP

CE NPSD-1184-A
Rev 00

Joint Applications Report for DC Power Source Allowed Outage Time Extension

CEOG Task 849

© Westinghouse Electric Company, LLC

LEGAL NOTICE

This report was prepared as an account of work sponsored by the CE Owners Group and Westinghouse Electric Company, LLC. Neither Westinghouse nor the CEOG, nor any person acting on their behalf:

A. Makes any warranty or representation, express or implied including the warranties of fitness for a particular purpose or merchantability, with respect to the accuracy, completeness, or usefulness of the information contained in this report, or that the use of any information, apparatus, method, or process disclosed in this report may not infringe privately owned rights; or

B. Assumes any liabilities with respect to the use of, or for damages resulting from the use of, any information, apparatus, method, or process disclosed in this report.

Westinghouse Electric Company LLC
2000 Day Hill Road, P.O. Box 500
Windsor, CT 06095-0500

CE NPSD-1184-A, Rev 00

Joint Applications Report for DC Power Source Allowed Outage Time Extension

CEOG Task 849
Final Report

May 2001

Author: _____
Rupert Weston
Probabilistic Safety Analysis

Reviewer: _____
Raymond Schneider
Probabilistic Safety Analysis

Approved: _____
Richard Whipple
Probabilistic Safety Analysis

©2001 Westinghouse Electric Company LLC
2000 Day Hill Road, P.O. Box 500
Windsor, CT 06095-0500

COPYRIGHT NOTICE

This report has been prepared by Westinghouse Electric Company, LLC for the members of the CE Owners Group participating in this Group Task, and bears a Westinghouse Electric Company copyright notice. Information in this report is the property of and contains copyright information owned by Westinghouse and /or its subcontractors and suppliers. It is transmitted to you in confidence and trust, and you agree to treat this document and the information contained therein in strict accordance with the terms and conditions of the agreement under which it was provided to you.

As a participating member of this CE Owners Group task, you are permitted to make the number of copies of the information contained in this report which are necessary for your internal use in connection with your implementation of the report results for your plant(s) in your normal conduct of business. Should implementation of this report involve a third party, you are permitted to make the number of copies of the information contained in this report which are necessary for the third party's use in supporting your implementation at your plant(s) in your normal conduct of business if you have received the prior, written consent of Westinghouse to transmit this information to a third party or parties. All copies made by you must include the copyright notice in all instances.

The NRC is permitted to make the number of copies beyond those necessary for its internal use that are necessary in order to have one copy available for public viewing in the appropriate docket files in the NRC public document room in Washington, DC if the number of copies submitted is insufficient for this purpose. Copies made by the NRC must include the copyright notice in all instances.

©2001 Westinghouse Electric Company LLC
2000 Day Hill Road, P.O. Box 500
Windsor, CT 06095-0500

All Rights Reserved

UNITED STATES
NUCLEAR REGULATORY COMMISSION
WASHINGTON, D.C. 20555-0001

May 9, 2001

Mr. Richard Bernier, Chairman
CE Owners Group
Mail Stop 7868
Arizona Public Service Company
Palo Verde Nuclear Generating Station
P.O. Box 52034
Phoenix, Arizona 85072-2034

SUBJECT: CE NPSD-1184, "JOINT APPLICATIONS REPORT FOR DC POWER SOURCE ALLOWED OUTAGE TIME EXTENSION," FINAL REPORT, CEOG TASK 849, MARCH 2000 (TAC NO. MA8517)

Dear Mr. Bernier:

By letter dated March 13, 2000, the Combustion Engineering Owners Group (CEOG) submitted CE NPSD-1184, "Joint Applications Report for DC Power Source Allowed Outage Time Extension," for NRC review and approval as part of a collaborative effort of participating CEOG members. The Joint Applications Report (JAR) presents the results of a probabilistic safety assessment (PSA) for extending the allowed outage time for dc power sources. The CEOG requested that the NRC safety evaluation specifically identify the acceptability of the PSA results to the plants referenced in the JAR and identify any additional information required to be provided when the plant-specific license amendment requests are submitted to the NRC for approval.

The staff has found that CE NPSD-1184 is acceptable for referencing in licensing applications for CE designed pressurized water reactors to the extent specified and under the limitations delineated in the report and in the associated NRC safety evalution. The safety evaluation defines the basis for acceptance of the report.

The enclosed safety evaluation concludes that the CEOG PSA results are below or comparable with the guideline values for allowed outage time (AOT) risk defined in the NRC's Standard Review Plan and are considered acceptable. For Waterford Steam Electric Station, Unit 3 (and San Onofre Nuclear Generating Station, Units 2 and 3), these PSA results provide an acceptable basis for extending the AOT from 2 to 24 hours subject to the acceptable implementation of conditions credited in the CEOG PSA into the plant specific technical specification change and addressing the following issues:

- Type of maintenance permitted during the AOT,
- Battery or battery charger operability during the AOT,
- Provisions for establishing non-common cause faults,
- Independence between onsite and offsite systems,
- Recovery of offsite power without dc control power,
- Battery charger capacity,
- Impact of parallel operating battery charger failure on the PSA results,
- PSA credited design and operational features,

a. Cross connecting between buses without dc control power
b. Adding loads without dc control power
c Transferring dc power supply to vital instrumentation bus

- Implementation of Tier 2 program requirements,
- Configuration risk management program (CRMP) (i.e., Tier 3) or alternative method for meeting section (a)(4) of the maintenance rule,
- Probabilistic risk assessment quality,
- Monitoring of battery and charger performance in relation to the maintenance rule performance criteria, and
- Impact of external events on PSA results.

We do not intend to repeat our review of the matters described in the subject report, and found acceptable, when the report appears as a reference in license applications, except to ensure that the material presented applies to the specific plant involved. Our acceptance applies only to matters approved in the report.

In accordance with procedures established in NUREG-0390, the NRC requests that the CEOG publish an accepted version, within 3 months of receipt of this letter. The accepted version shall incorporate this letter and the enclosed safety evaluation between the title page and the abstract, and add an "-A" (designating "accepted") following the report identification symbol.

Should our criteria or regulations change so that our conclusions as to the acceptability of the report are invalidated, the CEOG and/or the applicants referencing the topical report will be expected to revise and resubmit their respective documentation, or submit justification for the continued applicability of the topical report without revision of their respective documentation.

Sincerely,

Stuart A. Richards, Director
Project Directorate IV and Decommissioning
Division of Licensing Project Management
Office of Nuclear Reactor Regulation

Project No. 692

Enclosure: Safety Evaluation

cc w/encl See next page

UNITED STATES
NUCLEAR REGULATORY COMMISSION
WASHINGTON, D.C. 20555-0001

SAFETY EVALUATION BY THE OFFICE OF NUCLEAR REACTOR REGULATION

RELATED TO TOPICAL REPORT CE NPSD-1184,

"JOINT APPLICATIONS REPORT FOR DC POWER SOURCE

ALLOWED OUTAGE TIME EXTENSION"

PROJECT NO. 692

1.0 INTRODUCTION

In a Joint Applications Report (JAR) (References 1, 2, and 3), the Combustion Engineering Owners Group (CEOG) provided the technical basis (i.e., risk-informed and deterministic justifications) for changing the technical specification (TS) allowed outage times (AOTs) for the safety related 125 volt dc sources of the electrical power system at nuclear power plants with Combustion Engineering (CE) pressurized water reactor (PWR) designs. Specifically, the JAR provides the methodology and technical justification for the extension of the AOT for the battery or its respective charger(s) from the current 2 hour AOT to either an 8 or 24 hour AOT. The scope of this effort covers dc systems where the dc bus remains energized from either a battery or battery charger, one of which must be operable.

The proposed methodology presented in the JAR applies to the batteries and charger(s) for all CE-PWR designs. The specific applications of this methodology were presented for Waterford Steam Electric Station, Unit 3 (WSES-3) and San Onofre Nuclear Generating Station, Units 2 and 3 (SONGS 2 and 3); thus, our evaluation is primarily focused on the acceptability of the application of this methodology as it relates to the dc system design at WSES-3 and SONGS 2 and 3.

For CE units with two dc system trains (e.g., Arkansas Nuclear One Unit 2 [ANO-2]), failure of a single dc system train will render safety system loads and indications within the affected division inoperable. For units with three or four dc system trains (such as WSES-3 and SONGS 2 and 3), the unavailability of a single dc system train will not necessarily render all safety system loads and indications within the affected division inoperable. Because of this design difference, the WSES-3 and SONGS 2 and 3 units are less affected (from a risk perspective during the AOT) by the loss of a dc system train than other CE units with two dc system trains. Thus, for WSES-3 and SONGS 2 and 3, the JAR has presented the methodology and technical justification for the extension of the AOT from the current 2 hour AOT to a 24 hour AOT. The scope of the JAR covers a safety related 125 volt dc system train that remains energized by one of its power sources (i.e., an operable battery or battery charger). If the dc system train does not remain energized from an operable battery or battery charger, then the 2 hour AOT applies.

The objective of this evaluation, as requested by CEOG (Reference 4), is to identify the acceptability of the probabilistic safety assessment (PSA) results and to identify additional information required to be provided when the plant-specific license amendment requests are submitted to the NRC for approval. To accomplish this objective, Information Systems Laboratories (ISL), Inc. was commissioned to evaluate the JAR. The ISL evaluation (Reference 5) primarily focused on the conditions credited for assuring conformance of CEOG PSA results with guideline values for AOT risk defined in the NRC's Standard Review Plan. The CEOG PSA results for large early release frequency (LERF)-based single AOT risk [incremental conditional large early release probability (ICLERP)], (4.3E-09 for WSES-3 and 3.0E-08 for SONGS 2 and 3), are both below the guideline value of 5.0E-08 (Tier 1). The CEOG PSA results for core damage frequency (CDF)-based single AOT risk [incremental conditional core damage probability (ICCDP)], (6.1E-08 for WSES-3 and 7.6E-07 for SONGS 2 and 3), are either lower or comparable to the guideline value of 5E-07 (Tier 1).

The average change in CDF and LERF, respectively, for WSES-3 are 6.0E-08 per year and 4.3E-09 per year. Corresponding average changes in CDF and LERF for SONGS 2 and 3 are 7.6E-07 per year and 3.0E-08 per year.

The above average change in CDF and LERF values are based on an assumed average entry of once per year into the limiting condition for operation (LCO) for a duration of 24 hours. Because on-line maintenance of a safety related battery is a rare event, the values presented above are very conservative. SONGS 2 and 3 does not anticipate any corrective maintenance of a safety related dc power source that would utilize the full-extended AOT (based on a review of prior maintenance history). Also, SONGS 2 and 3 does not plan any changes to their planned preventive maintenance programs of the dc power source that would utilize the full extended AOT. WSES-3 anticipates entering the LCO and utilizing the extended AOT for only corrective maintenance activity, which is a rare event.

Regarding the recent (February 3, 2001) fire at SONGS Unit 3, the increase in the frequency of this event impacted the average SONGS living PRA model CDF and LERF (i.e., increase of 3.0E-6 per year and 6.0E-8 per year, respectively). The impact is a negligible contributor to the dc power source ICCDP and ICLERP (i.e., 1.0E-9 and 1.0E10, respectively). Thus, the impact of the recent fire event at SONGS Unit 3 on the dc power source AOT extension is insignificant.

For WSES-3 and SONGS 2 and 3:

- The single AOT risk for WSES-3 is lower than the guideline value. The low value is primarily attributed to the existence of redundancy in the number of chargers that serve each dc safety system train. Each of three dc system trains is equipped with two safety related battery chargers. The CEOG PSA model assumes both chargers would be connected to the affected dc train during the AOT and each charger has (or the combination of the two chargers have) sufficient capacity to meet 100 percent of the normal and transient loading requirements.

- The single AOT risk for SONGS 2 and 3 is comparable to the guideline value. This comparability occurs despite the fact that each dc system train is served by only one charger. The primary factors responsible for lower than expected AOT risk are the following design and operational features that are credited in the CEOG PSA model:

- the ability to cross-connect between the same train 4kV ac safety-related buses at SONGS 2 and 3;

- the four independent dc buses each of which feeds a redundant train of safety related primary and secondary plant instrumentation, one of which feeds the turbine-driven auxiliary feedwater pump (AFW), a second which feeds the Train A emergency safety features (ESF) equipment, and a third which feeds the Train B ESF equipment;

- the provisions for maintaining the battery or battery charger in an operable condition;

- the provisions for transferring the dc bus power supply to the 120 volt ac vital instrumentation bus to its secondary power supply; and

- the provisions for closing the motor-driven auxiliary feedwater pump 4kV breaker manually.

The JAR primarily conveys that the proposed AOT time extension of [24 hours] is applicable either (a) when one full capacity charger is operable and the battery is inoperable, or (b) when the battery is operable and the battery charger is inoperable. The current 2 hour AOT continues to apply when both the battery and battery charger are considered inoperable The JAR identifies a number of conditions (and/or site specific design configurations) that must be met (or must be in place) for the risk informed arguments presented in the JAR to be valid To identify additional information required to be provided when the plant-specific license amendment requests are submitted to the NRC for approval, these design and operational features credited in the CEOG PSA model (including the features described above for WSES-3 and SONGS 2 and 3) are the primary focus of the following discussion and evaluation. The evaluation of these features will be performed when the plant-specific application for TS change is submitted for approval.

2 0 DISCUSSION

Implementation of the proposed AOT time extension allows time for limited scope battery (or battery charger) repairs during power operation. Battery replacement takes longer than 24 hours. Also, testing (i.e., performance and discharge tests) take longer than 24 hours. Battery replacement and testing are thus considered beyond the scope of this proposed AOT extension. Limited discharge of the battery, however, due to an unplanned inoperability of the battery charger or due to planned testing may be within the scope of this proposed AOT extension. The intent of the JAR is to justify extending the AOT based on risk-informed arguments in order to perform short duration on-line repair of faulty dc electrical equipment. The JAR assumes that the proposed full allowed outage time is adequate for performing the majority of on-line maintenance for the dc power sources. For example, the JAR asserts that the correction of inter-cell or cable high resistance readings can be performed within 6 to 8 hours; battery cell replacement can be accomplished in 8 to 16 hours; and bolt replacements can be accomplished within 4 to 6 hours.

For a plant configuration where a battery or its associated battery charger is out-of-service. the JAR specifies that the unaffected division of ESF equipment (i.e.. the division with the operable battery and associated charger) will remain fully functional. The JAR asserts:

- With a battery out-of-service on turbine trip, the unaffected division will have offsite and onsite ac and dc power sources available. ESF equipment in the unaffected division will be available.

- With a battery out-of-service on turbine trip with loss of offsite power. both divisions will lose their offsite ac power sources. Onsite ac and dc power sources and ESF equipment will be available in the unaffected division.

- With a charger out-of-service on turbine trip. offsite and onsite ac and dc power sources and ESF equipment in both divisions will be available.

- With a charger out-of-service on turbine trip with loss of offsite power. onsite ac and dc power sources and ESF equipment will be available in both divisions. The dc power source in the affected division (i.e., the division with the charger out-of-service) will become unavailable after some period of time.

- The condition or event which caused the inoperability is not present in the dc power subsystem of the unaffected division - the inoperability is not the result of a common condition or event.

- The switchyard dc system is independent and separate from the safety-related dc system. A single failure (or fault) of an ac load in the affected division (i.e . the division without dc control power) will cause loss of the affected division and ESF equipment but will not have an impact on ESF equipment (or cause loss of offsite power to the unaffected division).

On turbine trip with a battery out-of-service, the JAR asserts that the affected division (i.e.. the division with the battery out of service) will (depending on the power system design) either (a) lose both offsite and onsite ac power supplies and the availability of the affected division's ESF equipment. or (b) retain the offsite ac power supply to ESF buses, retain safety-related dc control power through the battery charger, retain the availability of the onsite standby power supply, and thus retain the availability of ESF equipment in the affected division.

Non-recovery probabilities for loss of offsite power and station blackout scenarios have been developed and utilized in the CEOG PSA risk calculation. These probabilities are based on industry operating experiences that reflect the causes of losing offsite power. Once offsite ac power is recovered, plant equipment not previously failed is assumed available (in a probabilistic sense) to help in event mitigation. Typically for these scenarios, the available motor-driven EFW (or AFW) pumps may be started and the turbine-driven EFW (or AFW) pump (if available) will now have dc control power to function. Therefore, when offsite ac power is recovered within the allowable time frame, core damage is averted since the EFW (or AFW) system will restore the heat removal capability of the steam generators.

SONGS 2 and 3 has an installed design to manually cross-connect one unit's emergency diesel generator safety related bus to the same train of the other unit's emergency diesel generator safety related bus. Loss of control power to either cross-tie breaker will prevent cross-tying the units from the control room. At SONGS 2 and 3, the dependence of the cross-tie breakers on safety related dc power is included in the CEOG PSA risk calculation. The JAR asserts that the manual closure of the cross tie breakers can be accomplished.

The turbine-driven pump at the plant may be available and would function, so long as the steam generators are not overfilled. However, all AFW control is performed "blind", that is without available instrumentation (only after both batteries fail will all instrumentation be lost). This potential is mitigated in some CE designed PWRs by either increased redundancy in dc systems or additional plant features that make them more robust to a loss of offsite power event. At SONGS 2 and 3, the turbine-driven AFW pump can be operated manually without safety related 125 volt dc control power. At WSES-3, the turbine-driven EFW pump can also be operated to deliver makeup to the steam generators; however, WSES-3 does not currently credit this recovery action in the CEOG PSA risk model. After the battery is depleted, the turbine-driven EFW pump is modeled as failed.

If a safety related dc battery is taken out of service, the JAR assumes that the battery chargers are incapable of handling the transient loading requirements. The JAR assumes that the affected battery chargers will trip off-line following a reactor trip with loss of offsite power, causing a consequential loss of the affected dc bus.

- This assumption is not applicable to WSES-3. The battery chargers at WSES-3 (two battery chargers operating in parallel) are capable of handling the transient loading requirements for complicated transients. The JAR thus specifies that both battery chargers must be operable during the proposed 24 hour AOT extension when the battery is disconnected and/or when the battery is inoperable.

- This assumption is applicable to SONGS 2 and 3. The JAR asserts that the risk calculations are based on the battery charger operating in tandem with the battery (i e . both the battery and its associated battery charger must be connected to the dc bus). The JAR thus specifies that the battery charger must be operable and connected to the battery and the battery must have sufficient capacity and capability to meet transient loading requirements.

The JAR states that the proposed AOT modifications described are consistent with the objectives and intent of the maintenance rule. The overall risk of performing maintenance will be controlled via implementation of a configuration risk management program (CRMP) consistent with the guidance set forth in Regulatory Guide (RG) 1.177, "An Approach for Plant-Specific, Risk-Informed Decision Making: Technical Specifications."

To meet section (a)(4) of the maintenance rule, licensees may use a "Configuration Risk Management Program." The CRMP provides a proceduralized risk-informed assessment to manage the risk associated with equipment inoperability. The CRMP applies to TS structures, systems, and components for which a risk-informed allowed outage time has been granted.

The CRMP should include the following elements:

- Provisions for the control and implementation of a Level 1, at power, internal events, probabilistic risk assessment (PRA)-informed methodology. The assessment shall be capable of evaluating the applicable plant configuration.

- Provisions for performing an assessment prior to entering the LCO condition for preplanned activities.

- Provisions for performing an assessment after entering the LCO for unplanned entry into the LCO

- Provisions for assessing the need for additional actions after the discovery of additional equipment out-of-service conditions while in the LCO condition.

- Provisions for considering other applicable risk-significant contributors, such as Level 2 issues and external events, qualitatively or quantitatively.

The CRMP provides the necessary assurances that appropriate assessments of plant risk configurations using software, matrices, or PRA analyses augmented by appropriate engineering judgement, are sufficient to support the proposed AOT extension requests for batteries/chargers. In addition, the CRMPs are used to assess changes in core damage frequency resulting from applicable plant configurations. The CRMPs use software, matrices, or if necessary, the full PRA to aid in the risk assessment of online maintenance and to evaluate the change in risk from a component failure. The CRMP is used when a battery/charger is intentionally taken out-of-service for a planned activity excluding short duration activities. In addition, the CRMP is used for unplanned maintenance or repairs of the batteries/chargers. Implementation of the CRMP with the following provisions described below will be addressed when the plant-specific application for TS change is submitted.

The CRMP shall include the following key elements:

1. <u>Key Element 1, Implementation of CRMP</u>

   A use of the CRMP is to implement section (a)(4) of the maintenance rule (10 CFR 50.65) with respect to on-line maintenance for risk-informed TSs, with the following additions and clarifications:

   - The scope of the structures, systems, and components (SSCs) to be included in the CRMP will be those SSCs modeled in the licensee's plant PRA in addition to those SSCs considered risk-significant in accordance with the plant maintenance rule program that are not modeled in the PRA.

   - The CRMP is PRA informed and may be in the form of either a matrix, an on-line assessment, or a direct PRA assessment.

   - CRMP will be invoked for:

- ❑ Risk-informed inoperability: A risk assessment shall be performed prior to entering the LCO for preplanned activities. For unplanned entry into the LCO, a risk assessment will be performed in accordance with plant procedures, utilizing the maintenance configuration matrix, augmented by appropriate engineering judgement.

- ❑ Additional SSC inoperability and/or loss of functionality: When in the risk-informed completion time, if an additional SSC within the scope of the CRMP becomes inoperable or non-functional, a risk assessment shall be performed in accordance with plant procedures.

- Tier 2 commitments apply for planned maintenance only, but will be evaluated as part of the Tier 3 assessment for unplanned occurrences.

2. Key Element 2, Control and Use of the CRMP

- Plant modifications and procedure changes will be monitored, assessed, and dispositioned as part of the normal PRA update process.

  - ❑ Evaluation of changes in plant configuration or PRA model features can be dispositioned by implementing PRA model changes or by the qualitative assessment of the impact of the changes on the CRMP. This qualitative assessment recognizes that changes to the PRA take time to implement and that changes can be effectively compensated for without compromising the ability to make sound engineering judgements. Limitations of the CRMP are identified and understood for each specific completion time extension.

- Procedures exist for the control and application of CRMP, including description of the process when outside the scope of the CRMP.

3 Key Element 3, Level 1 Risk-Informed Assessment

- The CRMP is based on a Level 1, at power, internal events PRA model. The CRMP assessment may use any combination of quantitative and qualitative input. Quantitative assessments can include reference to software, pre-existing calculations, or new PRA analyses.

- Quantitative assessments should be performed whenever necessary for sound decision making.

- When quantitative assessments are not necessary for sound decisionmaking, or are beyond the scope of the PRA model, qualitative assessments will be performed. Qualitative assessments will consider applicable, existing insights from quantitative assessments previously performed.

4. Key Element 4

External events and Level 2 issues are treated qualitatively and/or quantitatively.

3.0 EVALUATION

The JAR conveys that the primary intent of the proposed AOT extension is to provide for the potential of on-line maintenance of a battery or its respective charger that is declared inoperable during power operation. A secondary intent of the proposed AOT extension could be to provide additional time to recharge a battery (and return it to operable status) because it may have been discharged for some period of time due to an unexpected inoperability of a battery charger or planned testing. If, within the two hour AOT for an inoperable battery and battery charger, one out-of-one (or two out-of-two) battery charger(s) can be returned to operable status, it appears that the JAR (in addition to its primary intent) may provide justification for a 24 hour AOT to recharge the battery and reestablish its operability following an unplanned battery charger failure or planned testing. However, this secondary intent has not been explicitly addressed and is thus considered outside the scope of the JAR. If applicable, the utilization of the 24 hour AOT extension (and its acceptability) to recharge the battery following discharge may be addressed as part of the site specific application for AOT extension

Operability of the battery charger when the battery is inoperable has not been clearly defined in the JAR Similarly, operability of the battery when the battery charger is inoperable has not been defined. Battery and battery charger operability will be addressed when the plant-specific application for TS change is submitted

When a battery or its associated charger is inoperable, CEOG asserts that the risk justifications presented in the JAR are based, in part, on the redundant (unaffected) trains/divisions of safety-related dc power being fully functional. The JAR indicates that the proposed AOT extension for battery or charger inoperability is limited to non-common cause faults that would cause the affected electrical equipment to be taken out of service. The JAR specifies that common cause faults will be identified based on an engineering assessment performed by the CEOG member utility. The assessment will ensure that the condition (or event) which caused the inoperability is not common to redundant (or the unaffected) trains/divisions of safety-related power and that the unaffected trains/divisions are fully functional. The staff agrees that the proposed assessment provides a reasonable methodology for assuring the functionality of the redundant system and is therefore considered acceptable. The ISL evaluation recommended that each licensee be required to perform an operability determination of the unaffected redundant battery (or charger) shortly after entering the LCO, i.e . within 30 minutes. The implementation of this requirement for an operability determination will be addressed when the plant-specific application for TS change is submitted.

The JAR asserts that failure of an ac load without dc control power for protective relaying will result in loss of the affected ESF train. The JAR specifies that protective relaying in the switchyard would prevent loss of offsite power to ESF equipment in the unaffected division. The JAR, thus, asserts the plant-specific requirement for independence between onsite and offsite systems The evaluation/implementation of this plant-specific design requirement will be addressed, as applicable, when the plant-specific application for TS change is submitted.

The JAR asserts that recovery of offsite power is based on industry operating experience and that once offsite ac power is recovered, plant equipment not previously failed is assumed available (in a probabilistic sense) to help in event mitigation. Once offsite power is restored, it is not clear how it will become available to ESF equipment without dc control power. The offsite supply breaker must be re-closed manually without dc control power. The time needed for re-closing the offsite supply breaker to Class 1E loads was not addressed in the JAR. The capability (and time available) for reestablishing ac power to ESF equipment from the offsite system following its recovery will be addressed when the plant-specific application for TS change is submitted.

The PSA for WSES-3 and ANO-2 assume that the capacity of the charger (or combined chargers for WSES-3) is large enough to provide enough energy to satisfy the normal and transient loading requirements. Verification of charger capacity will be addressed when the plant-specific application for TS change is submitted.

WSES-3 uses two battery chargers. The common cause failure of both chargers (primarily because each charger has less than 100 percent capacity) is not currently modeled as part of the risk calculation but will be included in a later update of the model. The impact of common cause failure of both chargers will be addressed when the plant-specific application for TS change is submitted.

For SONGS 2 and 3, the battery charger is not sized to handle transient loading requirements with the battery removed from service. Because of this limitation, the PSA appropriately assumes that both the battery and the charger are required for energizing the dc bus. This implies that if a reactor trip occurs during the AOT, the charger will also trip off-line leading to the loss of a dc bus. Despite this design feature, the PSA results for the AOT reported for SONGS 2 and 3 are low. This is because the SONGS 2 and 3 PSA credits emergency ac cross-connect capability between both units and several operational features that are not typical among other CE plants. Identification and implementation of PSA credited design and operational features will be addressed when the plant-specific application for TS change is submitted.

One of the principle requirements of the staff's risk-informed review process (i.e., Tier 2) is to establish whether each licensee is evaluating defense-in-depth when entering a LCO. The information provided in the JAR is not plant-specific in this regard. For example, the staff expects that licensees will have procedures forbidding switchyard work during an AOT, even though the switchyard dc system is independent and separate from the safety-related dc system. Implementation of Tier 2 capabilities will be addressed when the plant-specific application for TS change is submitted.

One of the principle requirements of the staff's risk-informed review process (i.e., Tier 3 - configuration risk management program), is to ensure that licensees have:

- a predetermined knowledge of high risk configurations (e.g., risk matrix, spectrum of probabilistic risk assessment (PRA) analyses, or an on-line safety monitor), or

- the ability to evaluate and compensate for configuration risks as they evolve.

Due to lack of plant-specific data in the JAR, licensees should furnish information in individual submittals on how Tier 3 (i.e., CRMP) [or alternate methodology for meeting section (a)(4) of the maintenance rule] will be implemented. Implementation will be addressed when the plant-specific application for TS change is submitted.

To ensure that specific PRAs are adequate to support the requested TS changes, each licensee should furnish information on PRA quality, including:

- Assurance that the PRA reflects the as-built, as-operated plant.
- Updates of the PRA since the last review cycle, including corrections of weaknesses identified by past reviews.
- Details of their peer review process, a summary of the peer review findings, and a discussion of the independence of internal reviews/reviewers.
- Description of PRA quality assurance methods.
- Results of reviews of pertinent accident sequences and cut sets for modeling adequacy and completeness (with respect to this application).

The licensee must provide specific documentation on PRA quality as described in RG 1.177. PRA quality will be addressed when the plant-specific application for TS change is submitted.

The staff expects the licensee to implement these TSs changes and other administratively controlled documentation in accordance with the three-tiered approach referenced above. The licensee will monitor battery and charger performance in relation to the maintenance rule performance criteria. Application of implementation and monitoring strategies will help to ensure that extension of the battery/charger AOT from 2 hours to 24 hours will not degrade operational safety over time and that the risk incurred when a battery/charger is taken out of service is acceptable.

4.0 CONCLUSION

The results of the CEOG PSA are below or comparable with the guideline values for AOT risk defined in the NRC's Standard Review Plan and are considered acceptable. For WSES-3 and SONGS 2 and 3, these PSA results provide an acceptable basis for extending the AOT from 2 to 24 hours subject to the acceptable implementation of conditions credited in the CEOG PSA into the plant-specific TS change and addressing the following issues.

- Type of maintenance permitted during the AOT,
- Battery or battery charger operability during the AOT,
- Provisions for establishing non-common cause faults,
- Independence between onsite and offsite systems,
- Recovery of offsite power without dc control power,
- Battery charger capacity,
- Impact of parallel operating battery charger failure on the PSA results,
- PSA credited design and operational features,

  - Cross connecting between buses without dc control power
  - Adding loads without dc control power
  - Transferring dc power supply to vital instrumentation bus
- Implementation of Tier 2 program requirements,
- CRMP (i.e., Tier 3) or alternative method for meeting section (a)(4) of the maintenance rule,
- PRA quality,
- Monitoring of battery and charger performance in relation to the maintenance rule performance criteria, and
- Impact of external events on PSA results

5.0 REFERENCES

1. CE NPSD-1184, Rev. 00, "Joint Application Report for DC Power Source Allowed Outage Time Extension," Final Report, CEOG Task 849, March 2000, Prepared for the Combustion Engineering Owners Group by ABB C-E Nuclear Power, Inc. (ADAMS Accession Number ML003694375).

2. Response to Request for Additional Information concerning CEOG Topical Report CE NPSD-1184, "Joint Applications Report for DC Power AOT Extension," to NRC from Richard Bernier, Chairman, CE Owners Group, November 21, 2000, CEOG-00-327 (NRC Project No. 692, ADAMS Accession Number ML003771376).

3. Response to Request for Additional Information concerning CEOG Topical Report CE NPSD-1184, "Joint Applications Report for DC Power AOT Extension," to NRC from Richard Bernier, Chairman, CE Owners Group, April 10, 2001, CEOG-01-091 (NRC Project No. 692).

4. CE Owners Group Submittal of CE NPSD-1184, "Joint Applications Report for DC Power Source Allowed Outage Time Extension," March 2000, to NRC from Ralph Phelps, Chairman, CE Owners Group, CEOG-00-070, March 13, 2000. (NRC Project No 692, ADAMS Accession Number ML003694338).

5. Technical Evaluation of the CEOG Joint Applications for DC Power Source Allowed Outage Time Extension, Prepared for the Office of Nuclear Reactor Regulation, NRC by Information Systems Laboratories, Inc., November 2000, ISL-NRC-00-010 (ADAMS Accession Number ML003776980).

Principal Contributors: J. Knox
M. Wohl

Date: May 9, 2001

This page intentionally blank.

TABLE OF CONTENTS

LIST OF ACRONYMS iii

1.0 PURPOSE 1

2.0 SCOPE OF PROPOSED CHANGE TO TECHNICAL SPECIFICATION 3

3.0 BACKGROUND 5

4.0 SUMMARY OF APPLICABLE TECHNICAL SPECIFICATIONS 7

4.1 STANDARD TECHNICAL SPECIFICATIONS 7
4.2 IMPROVED STANDARD TECHNICAL SPECIFICATION GUIDANCE 9
4.3 "CUSTOMIZED" TECHNICAL SPECIFICATIONS 9
4.4 IEEE DRAFT REFERENCE TO TS 3.8 10
4.5 COMMENTS ON DC SYSTEMS SHUTDOWN TS 10

5.0 SYSTEM DESCRIPTION AND OPERATING EXPERIENCE 13

5.1 SYSTEM DESCRIPTION 13
5.2 OPERATING EXPERIENCE 19

6.0 TECHNICAL JUSTIFICATION FOR CLASS 1E 125 VDC BATTERY AOT EXTENSION 21

6.1 STATEMENT OF NEED 21
6.2 ASSESSMENT OF DETERMINISTIC FACTORS 23
6.3 ASSESSMENT OF "AT POWER" RISK 25
6.3.1 Assumptions/Input 26
6.3.2 General Approach 28
6.3.3 Summary of Results for "At Power" Risk 35
6.3.4 LERP Sensitivity Studies 43

7.0 CONFIGURATION RISK MANAGEMENT PROGRAM 47

8.0 SUMMARY AND CONCLUSIONS 49

9.0 REFERENCES 51

LIST OF TABLES

2-1 Summary of Proposed AOT/CT Modifications 3
4-1 Summary of STS Electrical Power Systems, DC Distribution – Operating (Modes 1, 2, 3, 4) 8
4-2 Summary of Customized TS DC Electrical Power Sources (Modes 1, 2, 3, 4) 9
5-1 Comparison of Class 1E 125 VDC Power System Configurations at CE Designed PWRs 14
6-1 Current DC Power Source AOT for CEOG Plants 22
6-2 ICCDP Estimates due to Unavailability of a Battery/Battery Charger 35
6-3 Normalized Bounding ICLERP Estimates due to Unavailability of a Battery/Battery Charger 42
6-4 ICLERP Estimates due to Unavailability of a Battery/Battery Charger 43
6-5 Sensitivity Results for Thermally-Induced SGTR 44
6-6 Sensitivity Results for MSSV Failing Open 45

LIST OF FIGURES

4-1 Mode Risks Associated with Battery Unavailability 10
6-1 Simplified Large Early Release Event Tree 34

LIST OF ATTACHMENTS

1 NUREG-1432 Revision 1, Section 3.8.4 53
2 DC Electrical Power System Configurations at CE Designed PWRs 57
3 DC Electrical Power System Configurations Analyzed for the CE Designed PWRs 67
4 Historical Review Information 73

LIST OF ACRONYMS

AFW	Auxiliary Feedwater
AMG	Accident Management Guideline
ANO-2	Arkansas Nuclear One – Unit 2
AOT	Allowed Outage Time
CC-1&2	Calvert Cliffs Units 1&2
CCFP	Conditional Containment Failure Probability
CDF	Core Damage Frequency
CE	Combustion Engineering
CEOG	Combustion Engineering Owners Group
CRMP	Configuration Risk Management Program
CT	Completion Time
DC	Direct Current
DCH	Direct Containment Heating
EDG	Emergency Diesel Generator
EFW	Emergency Feedwater
ESF	Engineered Safety Feature
FCS	Fort Calhoun Station
FSAR	Final Safety Analysis Report
HPME	High Pressure Melt Ejection
ICCDP	Incremental Conditional Core Damage Probability
ICLERP	Incremental Conditional Large Early Release Probability
ISLOCA	Interfacing System Loss of Coolant Accident
ISTS	Improved Standard Technical Specifications
LCO	Limiting Condition for Operation
LER	Large Early Release
LERF	Large Early Release Frequency
LOP	Loss of Offsite Power
MP-2	Millstone Unit 2
NOED	Notice of Enforcement Discretion
NPP	Nuclear Power Plant
NRC	Nuclear Regulatory Commission
NSSS	Nuclear Steam Supply System
Pal	Palisades Nuclear Plant
PSA	Probabilistic Safety Assessment
PWR	Pressurized Water Reactor

LIST OF ACRONYMS (Cont'd)

PVNGS 1, 2 & 3	Palo Verde Nuclear Generating Station Units 1, 2, &3
RCS	Reactor Coolant System
RPS	Reactor Protection System
RPV	Reactor Pressure Vessel
SBO	Station Blackout
SG	Steam Generator
SGTR	Steam Generator Tube Rupture
SL-1	St. Lucie Plant Unit 1
SL-2	St. Lucie Plant Unit 2
SONGS 2&3	San Onofre Nuclear Generating Station Units 2 & 3
STS	Standard Technical Specifications
T-I	Thermally-Induced
TS	Technical Specification
VDC	Voltage – Direct Current
WSES-3	Waterford Steam Electric Station, Unit 3

1.0 PURPOSE

The purpose of this report is to provide justification for a risk-informed change to the Technical Specification (TS) allowed outage times (AOTs)/Completion Times (CTs) for the class 1E 125V direct current (DC) sources of the electrical power system at nuclear power plants (NPPs) with Combustion Engineering (CE) Nuclear Steam Supply System (NSSS) designs. Specifically, this report provides the methodology and technical justification for the extension of the AOT/CT addressed by Condition A of Section 3.8.4 of NUREG-1432, Revision 1 (Attachment 1) for a class 1E 125 VDC battery and its respective charger from the current 2 hours to either 8 or 24 hours. This proposed methodology applies to the batteries and respective charger(s) evaluations for all CE Pressurized Water Reactors (PWR) designs. Specific applications of this methodology are also presented in this report.

Implementation of the described AOT/CT modifications will enhance plant safety by allowing time for limited scope battery/battery charger repairs during power operation and averting unnecessary plant mode transitions. The proposed modifications will also reduce the potential for, and associated risks of, unnecessary plant shutdowns and consequently reduce the need for exigent Notice of Enforcement Discretion (NOED).

The described AOT/CT modifications are consistent with the objectives and intent of the Maintenance Rule [Ref. 1]. The overall risk of performing maintenance will be controlled via implementation of a configuration risk management program (CRMP) consistent with the guidance set forth in Regulatory Guide 1.177, "An Approach for Plant-Specific, Risk-Informed Decisionmaking: Technical Specifications", [Ref. 2].

This page intentionally blank.

2.0 SCOPE OF PROPOSED CHANGE TO TECHNICAL SPECIFICATION

The Limiting Conditions for Operation (LCO) of Section 3.8.4 of NUREG-1432, Revision 1, states that "The Train A and Train B DC electrical power subsystems shall be operable" during MODES 1, 2, 3 and 4. The required action for an inoperable DC electrical power subsystem during these modes of operation calls for restoring the DC electrical power subsystem to OPERABLE status with 2 hours. The 2 hour AOT/CT is based on a discussion provided in Regulatory Guide 1.93, "Availability of Electric Power Sources", [Ref. 3]. The intent of this effort is to use risk-informed arguments to support a change to the AOT/CT for these LCOs from the current value of 2 hours to either 8 or 24 hours, depending on the plant design. The scope of this effort covers a DC system where the DC bus remains energized from either a battery or a battery charger, one of which must be operable.

The specific AOT/CT modifications and their relative impact are summarized in Table 2-1 for Arkansas Nuclear One Unit 2 (ANO-2), Fort Calhoun Station (FCS), San Onofre Nuclear Generating Station Units 2 & 3 (SONGS 2&3), and Waterford Steam Electric Station Unit 3 (WSES-3). The risk increments associated with implementation of the AOT/CT extension identified in the table are based on plant specific analyses. The 24 hour AOT/CT extension request reflects plant uniqueness in the DC electrical systems, which include additional redundancy in the class 1E batteries and their respective chargers. CE PWR designs in this category include SONGS 2&3 and WSES-3. Results for Palisades (not shown in Table 2-1) are provided within the body of the report to confirm the adequacy of their current 24 hour AOT for this condition. Risk data for the Palo Verde Nuclear Generating Station Units 1, 2 & 3 (PVNGS-1, 2 & 3), St. Lucie Units 1 & 2 (SL-1&2), Millstone Unit 2 (MP-2), and Calvert Cliffs Units 1 & 2 (CC 1&2) and their respective recommended AOT extension are not included in this report. Such information will be provided at the time a plant specific technical specification change request is submitted. These later submittals will utilize the general methodology contained in this report.

TABLE 2-1
Summary of Proposed AOT/CT Modifications

CEOG Plant	Proposed AOT/CT [hours]	ICCDP Increase over Current AOT/CT	ICLERP Increase over Current AOT/CT
ANO-2	8	4.51E-7	3.21E-8
FCS	8	4.96E-7	2.68E-8
SONGS 2&3	24	6.95E-7	2.73E-8
WSES-3	24	5.54E-8	3.94E-9

The inoperability of a DC electrical power subsystem considered in this report is limited to non-common cause faults that would cause the affected electrical equipment to be taken out of service. The exclusion of common cause faults from the scope of the evaluation is based on the performance of an immediate assessment by the Combustion Engineering Owners Group (CEOG) member utility to ensure that the inoperability of the DC power subsystem was not the result of a common cause event. The LCO of Section 3.8.4 of NUREG-1432, Revision 1, addresses the inoperability of a DC electrical power subsystem. The extension of the associated AOT/CT for an inoperable DC electrical power subsystem is the focus of this report. The simultaneous inoperability of more than one DC electrical power subsystem due to a common cause fault is governed by LCO 3.0.3, which is outside the scope of this report. Common cause faults that render the DC electrical system inoperable are risk significant and require immediate plant shutdown. Common cause faults of the DC electrical system are not candidates for on-line repair during MODES 1, 2, 3, and 4. The intent of this is report is to justify extending the AOT/CT associated with the LCO for Section 3.8.4 of NUREG-1432, Revision 1, or equivalent TSs in order to perform short duration on-line repair of faulty DC electrical equipment. Such equipment would be declared inoperable and taken out of service due to a non-common cause fault.

3.0 BACKGROUND

This report provides a risk-informed technical basis for specific changes to TS AOTs/ CTs associated with inoperability of one DC electrical power subsystem. The applicable AOTs and completion times include those that correspond to the LCO and Conditions of Section 3.8.4 of NUREG 1432, Revision 1. The primary intent of the proposed changes is to provide for the potential of on-line maintenance of a battery or its respective charger that is declared INOPERABLE during operation in the applicable modes (Modes 1, 2, 3 and 4, or equivalent for customized TSs). These changes are warranted based on the low incremental risk associated with the extended AOTs. Additional time for battery/battery charger repair will also reduce the transition risk associated with shutting down the plant to Mode 5 (cold shutdown).

This application is being pursued by the CEOG as a risk-informed plant modification in accordance with NRC Regulatory Guides 1.174, [Ref. 4] and 1.177 [Ref. 2]. As required by Reference 2 all plants that adopt these changes will implement a CRMP to provide Probabilistic Safety Assessment (PSA) informed maintenance controls. CRMPs in conformance with A4 of the Maintenance Rule [Ref. 1] will be considered sufficient to satisfy this commitment.

This application provides generic information supporting the AOT extension for a battery and its respective charger, as well as the necessary plant-specific information to demonstrate the impact of these changes on an individual plant basis. The risk assessments provided in this report are based upon PSA models that reflect the plant configurations of concern during normal operation. The risk assessments provided in this document consider the significant impacts of the proposed TS modification. This includes an assessment of the Incremental Conditional Core Damage Probability (ICCDP) and the Incremental Conditional Large Early Release Probability (ICLERP) for a battery or its respective charger being out of service for the full duration of the AOT/CT. The supporting/analytical material contained herein is considered applicable to all CEOG member utilities (as appropriate) regardless of the category of their plant TSs.

In accordance with Regulatory Guide 1.177, single AOT risk is evaluated against the "very small risk" metrics of 5.0E-7 for ICCDP and 5.0E-8 for ICLERP. The cumulative impact of multiple simultaneous and sequential entries into the TS and the impact of external events are also considered.

This page intentionally blank.

4.0 SUMMARY OF APPLICABLE TECHNICAL SPECIFICATIONS

There are three distinct categories of TSs at CE designed NSSS units. Each category is described below.

The first category concerns TSs that utilized the format outlined in NUREG-0212 [Ref. 5]. Through May 1999, NUREG-0212, Revision 03, commonly referred to as "Standard Technical Specifications (STS)", has provided a model for the general structure and content of the approved technical specifications for several of the domestic CE designed NSSS plants. The CE designed NSSS units with current, approved TSs in the STS format are: (a) MP-2, (b) SL-1, (c) SL-2, (d) ANO-2, and (e) WSES-3.

The second category concerns TSs that reference the Improved Standard Technical Specifications (ISTS) guidance provided in NUREG-1432 (Revision 0, dated September 1992 and Revision 1, dated April 1995). The CE designed NSSS units with current, approved TSs that reference ISTS guidance are: (a) SONGS 2&3, (b) PVNGS-1, 2, and 3, and (c) CC-1&2.

The third category includes those TSs that have structures other than those that are outlined in either NUREG-0212 [Ref. 5] or NUREG-1432 [Ref. 6]. These TSs are generally referred to as "customized" TSs; and they are associated with the early CE PWR designs. The CE designed NSSS plants that (a) have current and approved "customized" TSs and (b) do not have an on-going decommissioning plan are: Palisades Nuclear Generating Station and FCS. (Note: At the Palisades Station, there is an on-going program for conversion to TSs that reference ISTS guidance.)

Each of these categories of TSs include operating requirements for batteries and their respective chargers corresponding to the requirements addressed in NUREG-1432 LCO 3.8.4.

4.1 STANDARD TECHNICAL SPECIFICATIONS

The current STS for the various CE designed NSSS plants for DC Sources – Operating are summarized in Table 4-1. References 12 through 16 were used to summarized the information in this table. The LCO is entered whenever a battery is declared inoperable. Unavailability of a single charger may not render the associated battery inoperable due to the availability of redundant dedicated backup chargers and/or swing chargers.

In all instances, inoperability of a battery bank will result in a 2 hour AOT. The STS further requires, if OPERABLE status of the battery bank is not achieved by the end of the 2 hour interval, the plant must be in hot standby in the next 6 hours and must be in cold shutdown in 30 hours.

Table 4-1
Summary of STS Electrical Power Systems, DC Distribution – Operating (Modes 1, 2, 3, 4)

CEOG Plant	TS #	Limiting Condition for Operation	TS Required Action	Comment	System Configuration See Figure
MP-2	3.8.2.3	The following D.C. bus trains shall be energized and OPERABLE with at least one tie breaker between bus trains open: 1. TRAIN "A" consisting of 125-volt D.C. bus 201A, 125-volt D.C. battery bank 201A and at least 400 ampere charging capacity. 2. TRAIN "B" consisting of 125-volt D.C. bus 201B, 125-volt D.C. battery bank 201B and at least 400 ampere charging capacity.	a) With one 125-volt D.C. bus inoperable (Note 3) b) With a 125-volt D.C. battery and/or charger inoperable (Note 4)	One spare charger available	1 (Note 9)
SL-1	3.8.2.3	As a minimum the following D.C. electrical sources shall be OPERABLE: 1. 125-volt D.C. bus No. 1A, 125-volt Battery bank No. 1A and a full capacity charger. 2. 125-volt D.C. bus No. 1B, 125-volt Battery bank No. 1B and a full capacity charger.	a) With one of the required battery banks or busses inoperable (Note 1) b) With one of the required full capacity chargers inoperable (Notes 5 & 8)	Three spare chargers (to each bus and one swing)	3A (Note 9)
SL-2	3.8.2.1	As a minimum the following D.C. electrical sources shall be OPERABLE: 1. 125-volt Battery bank No. 2A and a full capacity charger. 2. 125-volt Battery bank No. 2B and a full capacity charger.	a) With one of the battery banks inoperable (Note 2) b) With one of the required full capacity chargers inoperable (Notes 6 & 8)	Three spare chargers (to each bus and one swing)	3B (Note 9)
ANO-2	3.8.2.3	As a minimum, the following D.C. electrical sources shall be OPERABLE: 1. TRAIN "A" consisting of 125-volt D.C. bus No. 1, 125-volt D.C. battery bank No. 1 and a full capacity charger. 2. TRAIN "B" consisting of 125-volt D.C. bus No. 2, 125-volt D.C. battery bank No. 2 and a full capacity charger.	c) With one of the required battery banks inoperable (Note 2) d) With one of the required full capacity chargers inoperable (Notes 7 & 8)	One spare charger available	1 (Note 9)
WSES-3	3.8.2.1	As a minimum the following D.C. electrical sources shall be OPERABLE: 1. 125-volt Battery Bank No. 3A-S and one associated full capacity charger (3A1-S or 3A2-S). 2. 125-volt Battery Bank No. 3B-S and one associated full capacity charger (3B1-S or 3B2-S). 3. 125-volt Battery Bank No. 3AB-S and one associated full capacity charger (3AB1-S or 3AB2-S).	a) With one of the required battery banks inoperable (Note 2) b) With one of the required full capacity chargers inoperable (Notes 6 & 8)	Three redundant dedicated chargers available, one dedicated to each bus	4 (Note 9)

Notes for Table 4-1
1. Restore the inoperable battery bank or bus to OPERABLE status within 2 hours or be in HOT STANDBY within 6 hours and COLD SHUTDOWN within the following 30 hours.
2. Restore the inoperable battery bank to OPERABLE status within 2 hours or be in HOT STANDBY within 6 hours and COLD SHUTDOWN within the following 30 hours.
3. Restore the inoperable bus to OPERABLE status within 2 hours or be in COLD SHUTDOWN within the next 36 hours.
4. Restore the inoperable battery and/or charger to OPERABLE status within 2 hours or be in COLD SHUTDOWN within the next 36 hours.
5. Demonstrate the OPERABILITY of its associated battery bank(s) by performing Surveillance Requirement 4.8.2.3.2.a.1 within 1 hour, and at least once per 8 hours thereafter.
6. Demonstrate the OPERABILITY of its associated battery banks by performing Surveillance Requirement 4.8.2.1a.1 within 1 hour, and at least once per 8 hours thereafter.
7. Demonstrate the OPERABILITY of its associated battery banks by performing Surveillance Requirement 4.8.2.3.a.1 within 1 hour, and at least once per 8 hours thereafter.
8. If any Category A limit in Table 4.8-2 is not met, declare the battery inoperable.
9. Figure is provided in Attachment 2.

4.2 IMPROVED STANDARD TECHNICAL SPECIFICATION GUIDANCE

Section 3.8.4 of NUREG-1432, Revision 1, describes the LCO requirement for DC power sources. This includes the actions to be taken when the LCO requirements cannot be satisfied and the completion time for accomplishing the required actions. Section 2 of this report provides a description of NUREG-1432 definitions of the conditions when LCO requirements for the batteries and their respective chargers are not satisfied.

This report provides risk-informed justifications for AOT/CT extensions corresponding to the actions in response to Condition A as defined in NUREG-1432. This condition and the existing corresponding required action and completion time are provided in Attachment 1.

4.3 "CUSTOMIZED" TECHNICAL SPECIFICATIONS

The "customized" TSs for DC power sources differ from those in the two versions of STSs. These differences include the duration of the allowed outage time and the descriptions of the surveillance requirements. The CEOG plants that currently employ the "customized" TS format are the Fort Calhoun Station and Palisades units. The current TS and allowed outage times for DC power sources of these units are as shown in Table 4-2. References 17 and 18 were used to summarized the information in this table.

Table 4-2
Summary of Customized TS DC Electrical Power Sources (Modes 1, 2, 3, 4)

CEOG Plant	TS #	Limiting Conditions for Operation	TS Required Action	Comments	Allowed Outage Time (AOT)	
					Class 1E Battery	Class 1E Battery Charger
FCS	2.7	The reactor shall not be heated up or maintained at temperatures above 300 °F unless the following electrical systems are operable: k. Station batteries No. 1 and 2 (EE-8A and EE-8B) including one charger on each 125 V d-c bus No. 1 and 2 (EE-8F and EE-8G)	a) If the minimum station battery requirements cannot be satisfied (Note 1) b) Modification of battery charger minimum requirements (Note 2)	One spare battery charger is available (See Figure 1 of Attachment 2)	None	8 hours (Note 2)
PAL	3.7.4	The following DC electrical power sources shall be OPERABLE: a. Station Battery ED-01 and Charger ED-15, and b. Station Battery ED-02 and Charger ED-16	a) With one required charge inoperable (Note 3) b) With one battery inoperable: (Note 4)	Two spare battery chargers are available (See Figure 2 of Attachment 2)	24 hours	7 days

Notes for Table 4-2
1. The unit shall be placed in at least HOT SHUTDOWN within 6 hours, ..., and in at least COLD SHUTDOWN within the following 30 hours.
2. Two battery chargers may be inoperable for up to 8 hours provided battery charger No. 1 (EE-8C) or No. 2 (EE-8D) is operable. If this modification to the minimum requirement is violated, the reactor shall be placed in hot shutdown condition within the following 12 hours. If the violation is not corrected within an additional 12 hours, the reactor shall be placed in a cold shutdown condition within an additional 24 hours.

3. Place the cross-connected charger for the affected battery in service immediately, and restore the required charger to OPERABLE status within 7 days or the reactor shall be placed in HOT SHUTDOWN within 12 hours and the reactor shall be placed in COLD SHUTDOWN within 48 hours.
4. Place both chargers in service for the affected battery immediately, and restore the required battery to OPERABLE status within 24 hours or the reactor shall be placed in HOT SHUTDOWN within 12 hours and the reactor shall be placed in COLD SHUTDOWN within 48 hours.

4.4 IEEE DRAFT REFERENCE TO TS 3.8

Results of this analysis may also be used to support generic CEOG based AOTs/CTs for the proposed revision to the Improved Standard Technical Specification (ISTS) being developed by IEEE.

4.5 COMMENTS ON DC SYSTEMS SHUTDOWN TS

For most technical specifications, leaving the modes of applicability improves the plant restraints on the associated component. However, unavailability of the DC system has risk impact on all operating and non-operating plant modes. For the class 1E DC electrical systems, Mode 4/5 (cold shutdown) risk strongly relies on the availability of offsite power. The EDGs rely on the batteries to start and turbine-driven AFW pump relies on the battery for controlling steam generator level. Mode 4 and 5 operations are also sensitive to battery availability. Thus, assured entry into cold shutdown may actually increase plant risk by exposing the plant to transition risks and potentially increased mode specific risks. The mode risks associated with unavailability of the most limiting single battery for the San Onofre units is provided in Figure 4-1.

Figure 4-1

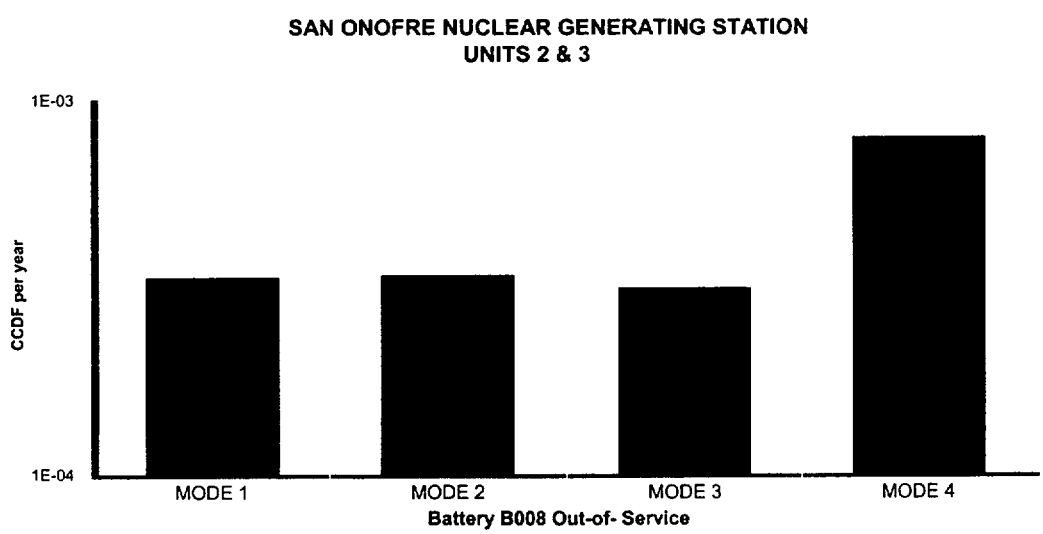

The respective risk increases in the hot and cold shutdown states are caused by postulated increases in the loss of offsite power initiating event due to potential grid instability, increased potential of switchyard maintenance/activities and unavailability (and/or increased unreliability) of the turbine-driven auxiliary feedwater pump. The absolute values of this impact will vary among the CEOG member utilities; however, the expectation of equivalent or higher risk during shutdown cooling entry should be consistent among the units.

This page intentionally blank.

5.0 SYSTEM DESCRIPTION AND OPERATING EXPERIENCE

5.1 SYSTEM DESCRIPTION

The station DC electrical power system provides both motive and control power to selected safety related equipment. It also provides preferred AC power to the 120 VAC vital buses (via inverters). For all of the CE NSSS designs (except CC-1&2, PVNGS 1, 2 & 3, SONGS 2&3, and WSES-3), the class 1E 125 VDC electrical power system consists of two independent and redundant safety related subsystems. For CC-1&2, PVNGS 1, 2 & 3, and SONGS 2&3, the class 1E 125 VDC electrical power system consists of four independent and redundant safety related subsystems. At WSES-3, there are three class 1E 125 VDC safety related subsystems. Each subsystem consists of one battery, the associated battery charger(s) for each battery, and all the associated control equipment and interconnecting cabling. The class 1E 125 VDC electrical power system at certain CE designed PWRs is also equipped with a swing charger, which can be aligned to either of its DC subsystems. For these units, the transfer mechanism is interlocked to prevent the respective DC subsystems from being simultaneously connected to the swing charger.

During normal operation, the 125 VDC loads are powered from the battery chargers with the batteries floating on the system. In the case of loss of normal power to the battery chargers, the 125 VDC loads are automatically powered from the batteries. Each battery charger has ample power output capacity for the steady state operation of connected loads required during normal operation, while at the same time maintaining its battery fully charged. Each battery charger also has sufficient capacity to restore its associated battery from the design minimum charge to its fully charged state while supplying normal steady state loads.

Seven configurations of class 1E DC power were identified for the CE PWRs. A brief description, which identifies the major electrical equipment for each configuration, is provided below and summarized in Table 5-1. A schematic for each configuration is provided in Attachment 2.

(1) Two batteries with a dedicated battery charger per battery and one swing battery charger. This is representative of ***ANO-2, FCS, and MP-2***.

(2) Two batteries with two dedicated battery chargers per battery. This is representative of ***Palisades***.

(3) Two batteries with two dedicated battery chargers per battery and a swing battery charger. This is representative of ***SL-1&2***.

(4) Three batteries with two dedicated battery chargers per battery. This is representative of *WSES-3*.

(5) Four batteries with a dedicated battery charger per battery. This is representative of *SONGS 2&3*.

(6) Four batteries with a dedicated battery charger per battery and two swing battery chargers. This is representative of *PVNGS 1, 2, & 3*.

(7) Four batteries with two dedicated battery chargers per battery. This is representative of *CC-1&2*.

Table 5-1
Comparison of Class 1E 125 VDC Power System Configurations at CE Designed PWRs

DC Power Equipment	CEOG Plants									
	ANO-2	CC 1&2	FCS	MP-2	PAL	PVNGS 1, 2 & 3	SONGS 2&3	SL-1	SL-2	WSES-3
No. of Class 1E 125 VDC Buses	2 (Note 1)	4 (Note 5)	2 (Note 1)	2 (Note 1)	2 (Note 1)	4 (Note 5)	4 (Note 5)	3 (Note 9)	5 (Note 10)	3 (Note 1)
No. of Class 1E 125 VDC Batteries	2 (Note 2)	4 (Note 7)	2 (Note 2)	2 (Note 2)	2 (Note 2)	4 (Note 7)	4 (Note 7)	2 (Note 2)	2 (Note 2)	3 (Note 13)
No. of Dedicated Battery Chargers	2 (Note 3)	8 (Note 12)	2 (Note 3)	2 (Note 3)	4 (Note 6)	4 (Note 6)	4 (Note 6)	5 (Note 11)	5 (Note 14)	6 (Note 12)
No. of Swing Battery Chargers	1 (Note 4)	0	1 (Note 4)	1 (Note 4)	0	2 (Note 8)	0	1 (Note 4)	1 (Note 4)	0

Notes for Table 5-1
1. The Class 1E 125 VDC power system is equipped with one bus per train
2. The Class 1E 125 VDC power system is equipped with one battery per train.
3. The Class 1E 125 VDC power system includes one dedicated battery charger per train
4. The swing battery charger can be aligned to either Train A or Train B, but not both trains at the same time.
5. The Class 1E 125 VDC power system is equipped with two buses per train.
6. The Class 1E 125 VDC power system is equipped with two dedicated battery chargers per train.
7. The Class 1E 125 VDC power system is equipped with two batteries per train. One battery is connected to its associated bus.
8. A swing battery charger can be aligned to either of the two associated buses within the train.
9. The Class 1E 125 VDC power system is equipped with one bus per train and one swing bus, which can be aligned to either train.
10. The Class 1E 125 VDC power system is equipped with two buses per train and one swing bus, which can be aligned to either train.
11. Each bus is connected to two dedicated battery chargers, except the swing bus, which is connected to a single dedicated battery charger.
12. Each bus is connected to two dedicated battery chargers.
13. Each bus is connected to a dedicated Class 1E 125 VDC battery.
14. Each bus is connected to one dedicated battery charger.

In the remainder of this subsection, typical loading for the class 1E DC electrical systems at the CEOG member utilities is provided. Generic representation of the loads is provided for the

various battery configurations identified above. Because the safety-related Auxiliary (or Emergency) Feedwater systems play a very important role in mitigating transient events, especially loss of offsite power and station blackout events, the DC power sources for the motor-driven and turbine-driven pumps are also identified for the various CE designed PWRs. The intent is to identify key safeguards equipment that will become inoperable when a DC power source is out of service concurrent with a loss of offsite power or station blackout event.

Two Battery Configuration

For all of the two battery configurations (i.e., ANO-2, FCS, MP-2, Palisades and SL-1&2), the loads powered by the class 1E DC electrical systems are divided into two safety-related divisions.

Typical loads for Division A (left channel at Palisades) include the following:

- Control power for emergency diesel generator A (or No. 1)
- 4.16 kV (2.40 kV at Palisades) breaker control power for Train A (left channel at Palisades) engineered safety feature equipment
- 480 V breaker control power for Train A (left channel at Palisades) engineered safety feature equipment
- Control power for reactor trip switchgear associated with RPS channels A and C
- Vital 120 VAC inverter A (inverter 1 at Palisades)
- Vital 120 VAC inverter C (inverter 3 at Palisades)

Typical loads for Division B (right channel at Palisades) include the following:

- Control power for emergency diesel generator B (or No. 2)
- 4.16 kV (2.40 kV at Palisades) breaker control power for Train B (right channel at Palisades) engineered safety feature equipment
- 480 V breaker control power for Train B (right channel at Palisades) engineered safety feature equipment
- Control power for reactor trip switchgear associated with RPS channels B and D
- Vital 120 VAC inverter B (inverter 2 at Palisades)
- Vital 120 VAC inverter D (inverter 4 at Palisades)

The safety-related Auxiliary (or Emergency) Feedwater system at ANO-2 and FCS is equipped with one motor-driven pump and one turbine-driven pump. Control power for the turbine-driven pumps at both of these units is obtained from the Division B load group, while control power for the motor-driven pumps is obtained from the Division A load group. The Auxiliary Feedwater (AFW) system at the remaining units (i.e., MP-2, Palisades, and SL-1&2) with two

battery configuration is equipped with two motor-driven pumps and one turbine-driven pump. Control power for each of the motor-driven pumps is obtained from a separate load group division. For these units with the exception of Palisades, either load group division can provide control power for the turbine-driven pump. At the Palisades unit, turbine-driven steam supply control circuit power is from the left channel only.

Three Battery Configuration

For WSES-3, which is the only CE designed PWR with a three battery configuration, the loads powered by the class 1E DC electrical systems are divided into three safety-related divisions. As shown in Figure 4 of Attachment 2, battery 3A-S is one of the power sources for the loads associated with Division A. Typical loads for Division A include the following:

- Control power for emergency diesel generator 3A-S
- Emergency diesel generator 3A-S fuel oil booster pump
- 6.9 kV breaker control power for Train A equipment
- 4.16 kV breaker control power for Train A engineered safety feature equipment
- 480 V breaker control power for Train A engineered safety feature equipment
- Control power for reactor trip switchgear associated with RPS channels A and C
- 120 VAC inverter 3A-S
- 120 VAC inverter 3MA-S
- 120 VAC inverter 3MC-S

Battery 3B-S is one of the power sources for the loads associated with Division B. Typical loads for Division B include the following:

- Control power for emergency diesel generator 3B-S
- Emergency diesel generator 3B-S fuel oil booster pump
- 6.9 kV breaker control power for Train B equipment
- 4.16 kV breaker control power for Train B engineered safety feature equipment
- 480 V breaker control power for Train B engineered safety feature equipment
- Control power for reactor trip switchgear associated with RPS channels B and D
- 120 VAC inverter 3B-S
- 120 VAC inverter 3MB-S
- 120 VAC inverter 3MD-S

The Emergency Feedwater (EFW) System at WSES-3 is equipped with two motor-driven pumps and one turbine-driven pump. Control power for each of the EFW motor-driven pumps is obtained from one of the above load group divisions. The third safety-related division, which is

designated as AB, provides control power for the EFW turbine-driven pump. Battery 3AB-S is one of the power sources for this load group division. In addition to supplying control power for the EFW turbine-driven pump, typical loads for Division AB include the following:

- EFW turbine-driven pump steam supply valves
- 4.16 kV breaker control power for switchgear 3AB3-S
- 480 V breaker control power for switchgear 3AB31-S

Four Battery Configuration

For all of the four battery configurations (i.e., PVNGS 1, 2 & 3 and SONGS 2&3), the loads powered by the class 1E DC electrical systems are divided into four safety-related subsystems. Two of these subsystems, A and C, provide power to safeguard equipment in Division A load group. The other two subsystems, B and D, provide power to safeguard equipment in Division B load group. As shown in Figures 5 and 6 of Attachment 2, each of the subsystems is powered by a single dedicated DC battery during emergency conditions. During normal operating conditions, a single dedicated battery charger is used to power each of the subsystems at SONGS 2&3 (i.e., DC bus D1, D2, D3, or D4). In addition to the dedicated battery charger for each subsystem at PVNGS 1, 2 & 3 (see Figure 6 of Attachment 2), a backup battery charger is also provided for each division. The backup battery charger for Division A can be manually aligned to either subsystem A or C (i.e., DC bus PKA-M41 or PKC-M43). The transfer mechanism is mechanically interlocked to prevent both subsystems from being simultaneously connected to the backup battery charger. A similar backup battery charger is provided for Division B. This charger can be manually connected to either subsystem B or C (i.e., DC bus PKB-M42 or PKD-M44).

Battery A (B007 for SONGS 2&3 or PKA-F11 for PVNGS 1, 2 & 3) is one of the power sources for the loads associated with subsystem A of Division A. Typical loads for this subsystem at PVNGS 1, 2 & 3 include the following, with similar loads at SONGS 2&3:

- Vital 120 VAC inverter A
- Reactor trip switchgear associated with RPS channel A
- 4.16 kV breaker control power for Train A engineered safety feature equipment
- 480 V breaker control power for Train A engineered safety feature equipment
- AFW turbine-driven pump steam supply valves and turbine governor control and feedwater valves
- Control power for Diesel generator A
- Channel A vital instrument distribution panel
- Turbine-driven AFW pump discharge valve and AFW discharge valve A (for SONGS 2 & 3)

Battery B (B008 for SONGS 2&3 or PKB-F12 for PVNGS 1, 2 & 3) is one of the power sources for the loads associated with subsystem B of Division B. Typical loads for this subsystem at PVNGS 1, 2 & 3 include the following, with similar loads at SONGS 2&3:

- Vital 120 VAC inverter B
- Reactor trip switchgear associated with RPS channel B
- 4.16 kV breaker control power for Train B engineered safety feature equipment
- 480 V breaker control power for Train B engineered safety feature equipment
- Turbine-driven AFW pump discharge valve and AFW discharge valve B (for SONGS 2&3)
- Control power for Diesel generator B
- Channel B vital instrument distribution panel

Battery C (B009 for SONGS 2&3 or PKC-F13 for PVNGS 1, 2 & 3) is one of the power sources for the loads associated with subsystem C of Division A. Typical loads for this subsystem at PVNGS 1, 2 & 3 include the following, with similar loads at SONGS 2&3:

- Vital 120 VAC inverter C
- Reactor trip switchgear associated with RPS channel C
- Shutdown cooling isolation valve UV-653 (for PVNGS 1, 2 & 3)
- Channel C vital instrument distribution panel
- Train A AFW pump feedwater valves (for PVNGS 1, 2 & 3)
- Turbine-driven AFW pump panel A for AFW pump steam inlet valve and governor (for SONGS 2&3)

Battery D (B010 for SONGS 2&3 or PKD-F14 for PVNGS 1, 2 & 3) is one of the power sources for the loads associated with subsystem D of Division B. Typical loads for this subsystem at PVNGS 1, 2 & 3 include the following, with similar loads at SONGS 2&3:

- Vital 120 VAC inverter D
- Reactor trip switchgear associated with RPS channel D
- Shutdown cooling isolation valve UV-654 (for PVNGS 1, 2 & 3)
- Channel D vital instrument distribution panel

The AFW system at PVNGS 1, 2 & 3 is equipped with one turbine-driven pump and one motor-driven pump. Subsystem A (i.e., DC bus PKA-M41), as show above, provides power for governor controller of the turbine-driven pump and the associated steam supply valves for the turbine. Control power for the circuit breaker of the motor-driven pump at PVNGS 1, 2 & 3 is obtained from subsystem B (i.e., DC bus PKB-M42).

The AFW system at SONGS 2&3 consists of two motor-driven pumps and one turbine-driven pump. Control power for the motor-driven pump associated with Train A of safeguard equipment is obtained from subsystem A (i.e., DC bus D1). Likewise, control power for the motor-driven pump associated with Train B of safeguard equipment is obtained from subsystem B (i.e., DC bus D2). The steam supply isolation valves, the stop valve, and the controls to the turbine governor are supplied with DC power from subsystem C (i.e., DC bus D3).

5.2 Operating Experience

In light of the current 2 hour AOT, on-line scheduled preventive maintenance of a DC power source is rare. A limited amount of on-line maintenance activities is performed. In general, maintenance activities associated with the DC power sources include:

- Fuse replacement
- Restoration of battery parameters within the allowable limits
- Replacement/changing of a bad battery cell
- Jumpering a bad battery cell
- Aligning a battery for parallel operation
- Repairing/replacing fault connectors

The majority of the above maintenance activities require more time to perform than is currently allowed by the TS. The correction of inter-cell or cable high resistance readings can be performed within 6 to 8 hours. Limited battery cell replacement has been performed at certain CEOG utilities within 2 hours. Such activities allow no margin for unexpected equipment faults or problems that could occur during the replacement. Unexpected equipment problems during the 2 hour period would have forced a plant shutdown and increased the risk associated with shutting down the plant. Such maintenance activities would be performed under highly stressful conditions, which increase the potential for technician error and personal injury. More realistically, battery cell replacement can be accomplished in 8 to 16 hours with proper planning and under routine conditions. Bolt replacements can be accomplished within 4 to 6 hours. While at power, bolt replacements for seismic restraints would cause the affected battery to be declared inoperable and subject the maintenance to a 2 hour AOT. This activity is currently performed during plant outages.

Periodic surveillance is performed to verify the battery terminal voltage and the battery charging (float) current. The verification of battery charger output voltage while on float charge helps to ensure the effectiveness of the charging system and the ability of the battery charger to perform its intended function. On float charge, the battery will receive adequate current to maintain it in a fully charged state. The verification of the battery charging current while on

float charge helps to ensure the ability of the battery to perform its intended function. The float charge is a condition that allows the battery charger to supply the continuous charge needed to overcome the internal losses of a battery and maintain the battery in its fully charged state.

Visual inspection of the battery is also performed on a periodic basis. This helps to detect corrosion of the battery cells and connections. The measurement of the resistance of each inter-cell, inter-rack and terminal connection provides an indication of physical damage or abnormal deterioration that could degrade battery performance.

As discussed in Section 4.5, while at power the DC electrical system serves a valuable safety function. Its value at shutdown is of equal, if not of increased, importance. This is particularly true as the plant undergoes mode transition and if concurrent switchyard maintenance activities are underway. Hence, the current practice of diverting corrective maintenance activities of battery/battery charger to shutdown mode may not necessarily reduce plant risk.

6.0 TECHNICAL JUSTIFICATION FOR CLASS 1E 125 VDC BATTERY AOT EXTENSION

This section presents an integrated assessment of the proposed AOT extension. The assessment includes discussion of: (a) motivation and need for technical specification change, (b) the impact of the change on the plant design basis and (c) probabilistic risk assessment of the proposed change.

Section 6.1 presents a summary statement of the need for the AOT extension (the supporting information for this section has been previously presented in Section 5). Section 6.2 provides an assessment of the deterministic factors, particularly those associated with the plant design basis. The probabilistic risk assessment of this AOT extension is contained in Section 6.3. These sections generally follow the Nuclear Regulatory Commission (NRC) guidance set forth in Reference 2 for risk informed changes to TSs.

6.1 STATEMENT OF NEED

The OPERABILITY of the DC electrical power subsystems requires all batteries and respective chargers to be operating and connected to the associated DC bus(es). The DC electrical power subsystems provide normal and emergency DC power for the Engineered Safety Features (ESF) systems including the emergency diesel generators and emergency auxiliary equipment. The batteries and their respective battery chargers are the power sources for the DC electrical power subsystems. The OPERABILITY of the batteries and their respective chargers is consistent with the initial assumptions of the accident analyses presented in Chapters 6, 14, and 15 of the Final Safety Analysis Reports (FSARs), as appropriate for the selected plant. The OPERABILITY of these DC power sources is based on meeting the design basis of the unit. This includes maintaining the DC power sources operable during accident conditions in the event of:

a. An assumed loss of all offsite AC power or all onsite AC power; and
b. A worst case single failure.

The Regulatory position (RG 1.193) associated with availability of power sources is that if the available onsite DC supplies are one less than that required by the LCO, power operation should be limited to two hours. If the unit cannot restore the affected DC supply in that time frame the unit should be brought promptly to a controlled shutdown and to a cold shutdown state in 36 hours. It was further noted that use of the above AOT was explicitly intended for corrective maintenance only.

The current AOT/CT for a class 1E station battery at all of the CEOG plants is 2 hours, with the exception of FCS, CC-1&2 and Palisades. With a class 1E battery out of service at FCS, the LCO ACTION STATEMENT requires that *"the unit shall be placed in at least HOT SHUTDOWN within 6 hours, in at least subcritical and < 300 °F within the next 6 hours, and in at least COLD*

SHUTDOWN within the following 30 hours ..." This requirement allows no time for restoring the battery to operability without shutting down the plant. Both CC-1&2 and Palisades LCO ACTION STATEMENTS allow more than 2 hours for restoring a class 1E battery to operability prior to the initiation of a plant shutdown. At CC-1&2, a CT of 4 hours is allowed for replacing the inoperable battery with the reserve battery. Otherwise, (if the reserve battery is not available) the inoperable battery should be restored to operability within 2 hours. With one battery inoperable at the Palisades unit, both chargers for the affected battery must be placed in service immediately and the affected battery must be restored to operable status within 24 hours. Otherwise, a plant shutdown is initiated if the battery cannot be restored within the AOT.

Certain CEOG plants also have AOTs for the restoring an inoperable class 1E battery charger to operability. The AOTs for the DC power sources at the CEOG plants are shown in Table 6-1. The corresponding number for the LCO ACTION STATEMENT is also shown in this table.

Table 6-1
Current DC Power Source AOT for CEOG Plants

DC Power Equipment	CEOG Plants									
	ANO-2	CC-1&2	FCS	MP-2	PAL	PVNGS 1, 2 &3	SONGS 2&3	SL-1	SL-2	WSES-3
Class 1E 125 VDC Battery	2 hrs	4 hrs (Note 2)	(Note 3)	2 hrs	24 hrs	2 hrs	2 hrs	2 hrs	2 hrs	2 hrs
Class 1E Battery Charger	(Note 1)	2 hrs	8 hrs (Note 4)	2 hrs	7 days	24 hrs	(Note 1)	(Note 1)	(Note 1)	(Note 1)
LCO Action	3.8.2.3	3.8.4	2.7	3.8.2.3	3.7.4	3.8.4	3.8.4	3.8.2.3	3.8.2.1	3.8.2.1

Notes for Table 6-1
1. If one of the required battery chargers is inoperable, the operability of the associated battery shall be demonstrated by verifying that the battery parameters meet the specified limits within 1 hour, and at least once per 8 hours thereafter. If any of the battery parameters is outside the limit, then the associated battery must be declared inoperable immediately.
2. The inoperable battery is replaced with the reserved battery within 4 hours. Otherwise, restore the DC channel within 2 hours.
3. If any of the station batteries is inoperable, the reactor shall be placed in a HOT SHUTDOWN condition within 6 hours.
4. Two battery chargers may be inoperable for up to 8 hours.

There have been no reported instances of maintenance on the station battery or battery charger having resulted in a forced plant shutdown. However, experience does indicate that the current 2 hour AOT is inadequate for most related maintenance tasks (see Section 2). Based on a review of the maintenance requirements on the DC power sources for CE designed PWRs, it was determined that extending the AOT/CT, from the current 2 hours (or less) to 8 hours, would provide sufficient margin to effect most of the anticipated and (on-line) maintenance activities. These activities would be performed to repair or restore faulty DC electrical equipment, which

have been declared inoperable due to a non-common cause failure. Based on plant specific risk evaluations, it is further recommended that the AOT/CT be extended from 2 hours to 24 hours for SONGS 2&3, and WSES-3. These units have additional redundancy associated with their DC electrical systems. Such extensions may be justified from a risk perspective based on regulatory approaches contained in RG 1.177. Technical support for this request is presented in Sections 6.2 and 6.3.

6.2 ASSESSMENT OF DETERMINISTIC FACTORS

The deterministic impact of a loss of a battery or charger varies among the CE designed NSSS units. This variation is due to differences in component redundancy and battery loading alignments. Thus, the impact of component (battery/charger) unavailability is greater for plants with lesser levels of component redundancy. This is also observed in review of PSA results (see Section 6.3). The following provides a deterministic assessment of unavailability of a battery or battery charger when the available class 1E DC electrical power sources are one less than the LCO. For a plant configuration where a battery or its associated battery charger is out of service, the unaffected division of class 1E DC power would still remain fully functional. [Note that PVNGS 1, 2 & 3, SONGS 2&3 and WSES-3 have additional battery/charger redundancies that make them more robust to a Loss of Offsite Power (LOP) event.] The deterministic assessment discusses the impact of the unavailability of a battery/charger following both an internal and external initiating event.

Internal Event Considerations

Unavailability of DC power sources decreases the capability of the plant to respond to reactor trips, LOP events and Station Blackout (SBO) events. Early CE designed units are typically designed such that the ESF buses are powered as part of the plant hotel loads. Following normal reactor trips the batteries provide control power to allow a fast transfer from the on-site alignment to the switchyard alignment, for those plants with fast transfer capability. Plants capable of fast transfer are ANO-2, FCS, SL-1&2, WSES-3, and MP-2. For the other CE plant design, the ESF buses are powered from the switchyard during normal power operation and are not subject to fast transfer following a turbine generator trip.

Following a LOP event the DC power is used for starting the Emergency Diesel Generators (EDGs). Unavailability of a battery renders its respective EDG inoperable, which in turn causes an entire train of ESF equipment to become INOPERABLE. Thus, should a loss of offsite power occur the plant relies entirely on the remaining train of AFW for heat removal. Failure of the respective AFW pump, without timely recovery of offsite power would result in core damage.

If the remaining battery fails upon LOP and no alternate AC (AAC) is provided, a condition will develop which results in total loss of power to the plant (no EDGs and no battery backup). The

Turbine-driven pump at the plant may be available and would function, so long as the steam generators are not overfilled. However, all AFW control is performed "blind", that is without available instrumentation (only after both batteries fail will all instrumentation be lost). This potential is mitigated in some CE designed PWRs by either increased redundancy in DC systems or additional plant features that make them more robust to a LOP event. For example, SL-1&2 can cross-tie their units to power a bus from an EDG of the other unit. PVNGS 1, 2 & 3 has on site AAC capability as does MP-2, CC-1&2, and ANO-2. FCS uses a diesel-driven auxiliary feedwater pump that is independent of station DC power.

While the DC electrical system is important during power operations, it is no less important during shutdown conditions (particularly when the plant is on shutdown cooling, see Section 4.5). Shutdown cooling operation is strongly dependent on DC power to ensure RCS heat removal. However, during shutdown cooling conditions LOP probability is greater due to both increased maintenance and the potential for lower grid stability. Hence, a LOP with a DC power source out of service would also expose the plant to potential core damage events. One particular vulnerability that may exist for some PWRs is an SBO with a DC power source out of service followed by the inability of a DC-dependent LTOP relief valve to open. This would ultimately result in an over-pressurization of the shutdown cooling piping, thus creating an intersystem LOCA leading to both core damage and a potential large early release.

External Event Considerations

External initiating events include seismic and weather related events including external flooding. As a result of the short exposure time associated with these events, random occurrences will produce low plant risk. For example, a seismic occurrence sufficient to create LOP at the San Onofre units is approximately 6.9E-3 per year [Ref. 10]. Hence for an exposure time of 8 hours, the seismic challenge probability during the exposure time that a battery is out of service is approximately 6.3E-6. Assuming that a seismic-induced LOP and failure of the remaining EDG (with a probability of 3.0E-2) and a loss of the turbine-driven AFW pump (with a failure probability of approximately 0.02) lead to core damage, the conditional probability for this sequence can be estimated using the following expression:

CCDP = [LOP x Failure Probability of EDG x Failure Probability of Turbine-driven AFW pump] AOT (hrs)/8760

Using the above specified values, the core damage probability during the exposure time of 8 hours is approximately 3.9E-9. For an exposure time of 24 hours, the core damage probability would be 1.1E-8. These values are much less than the acceptable at-power maintenance risk level. The risk involving seismic-induced failures is significantly less than the risk involving a seismic event and random failures. For example, the occurrence of a seismic-induced LOP and seismic-induced failure of the EDGs at SONGS 2&3 is 7.6E-8 per year [Ref. 10]. The

corresponding core damage probability during the exposure time of 8 hours is 6.9E-11, which is significantly less than the example involving random failure of the EDG. No credit is taken for restoring LOP following battery depletion and prior to the onset of core damage. For other CE designed PWRs, the seismic risk is low due to low seismic occurrence frequency.

In the event that an external event has a high likelihood of occurrence (such as pending hurricane or expectant ice storms) the Maintenance Rule related CRMP guidance will establish appropriate plant operating states based on plant configuration. This is particularly true when implementing this AOT because of its short proposed duration. For example, if a storm is expected to occur within the next day and battery maintenance and repair can be accomplished within an 8 hours time frame if the plant is at power, but repair would be delayed if a plant shutdown is initiated, the expeditious course of action would be to repair the battery at power and avert the risk of transitioning the plant to shutdown and exposing the plant to a high potential external event risk with an inoperable DC power source. In other instances, depending on the plant configuration and the confidence in completing the repair the prudent course of action may suggest plant shutdown.

SONGS 2&3 results presented in Section 6.3 specifically include effects of the dominant external event contributors to risk. As a consequence of the short duration AOT, impact of external events is considered negligible because either the probability of the initiating event occurring in the time frame is low or adequate compensatory actions may be taken within the CRMP to control risk. CRMP actions would include, as necessary, (1) assessment of the functional capability of the DC system, (2) ensuring availability of the redundant DC system, (3) increasing operation awareness to the increased plant risk during the battery outage, and (4) restricting activities that could challenge the plant's electrical systems or result in a plant trip.

6.3 ASSESSMENT OF "AT POWER" RISK

This section provides an assessment of the increased risk associated with continued plant operation with a DC power source out of service. In accordance with Regulatory Guide 1.177, the risk is reported in terms of the associated ICCDP and the ICLERP due to the AOT extension. The increased risk was assessed for conditions involving a 125 VDC battery out of service, or its respective battery charger out of service. The evaluation of the "at power" risk was assessed to determine the impact on plant risk due to the proposed AOT extension of a DC power source. The evaluation was performed on a plant specific basis using the current PSA model for the individual plant. All the models used are upgrades of those used in the IPE and reflect the current plant configurations at the time the evaluation was performed, with the exception of the Palisades unit. Palisades used the IPE model for PSA applications. A statement regarding the status of the PSA and a statement confirming the applicability of the plant specific risk values

contained in this report will be provided at the time of submittal for the AOT extension for each participating CEOG member utility.

The general assumptions that were made and the input used in estimating the plant risk are outlined in Section 6.3.1. The general approach used to estimate the plant risk due to the AOT extension is outlined in Section 6.3.2. The results obtained by applying the approach on a plant-specific basis are summarized in Section 6.3.3. A large early release sensitivity study of thermally-induced Steam Generator Tube Rupture (SGTR) probability is provided in Section 6.3.4. Since the DC electrical power system configuration varies among the CEOG member utilities, entry into the LCO also varies from plant to plant and is based on the type and number of equipment declared inoperable. The results provided in this section reflect the DC power configuration, for each of the participating CEOG member utilities, that leads to entry into the LCO and the largest conditional core damage frequency. Hence, the results for each plant presented in Section 6.3.3 are bounding for the various DC power configurations that may lead to LCO entry.

6.3.1 Assumptions/Input

The following assumptions/input were made or used in estimating the plant risk due to the proposed extension of DC power source allowed outage time. The assumptions were divided into generic and specific assumptions. The generic assumptions are applicable to both ICCDP and ICLERP. The specific assumptions are applicable to either ICCDP or ICLERP, but not both. The results and conclusions are based on the assumptions and inputs specified in this subsection.

Generic Assumptions

1. The risk measures used in estimating the incremental conditional core damage probabilities and incremental conditional large early release probabilities, as described in Section 6.3.2, were provided as input by the participating CEOG member utilities. The risk measures are based on the PSAs as they exist at the time this evaluation was performed.

2. The inoperability of more than one DC power source is not considered in this evaluation because such a condition is governed by the "3.0.3" LCO (or equivalent for plants with customized TSs. It is assumed that prior to on-line maintenance an assessment is performed to assure that the inoperability of the affected DC power source is not the result of a common cause failure. Appropriate assurances to that effect will be provided on a plant specific basis at the time of the individual submittal.

ICCDP Assumptions

1. The full allowed outage time for an inoperable DC power source is assumed to increase from its current duration of 2 hours in the majority of cases to a minimum duration of 8 hours. A duration of 24 hours is also considered and is recommended for the AOT/CT extension when supported by the plant specific evaluation.

2. The proposed full allowed outage time is assumed to be adequate for performing the majority of on-line maintenance for the DC power sources.

3. If a class 1E DC battery is taken out of service, it is assumed that the associated battery charger(s) are capable of handling the loading requirements following an uncomplicated transient such as a regular reactor trip. For complicated transients that require load shedding following a reactor trip or the actuation of safeguard equipment (i.e., the emergency diesel generators), it is assumed that the battery chargers are incapable of handling the transient loading requirements. Consequently, with a battery out of service the affected battery chargers will trip off line following a reactor trip, causing a consequential loss of the affected DC bus. This assumption is not applicable to ANO-2, Palisades and WSES-3. (See discussion on *Battery Charger Capacity* in Section 6.3.3.1.1.)

ICLERP Assumptions

1. The probability of containment isolation failure used in the PSAs for the CEOG member utilities varies from 1.0E-4 to approximately 3.0E-3. The upper limit was selected and used as a bounding value in this report.

2. It is assumed that all incremental core damage events lead to a core condition at high RCS pressure. Therefore, the potential for these events becoming a large early release is dependent upon the ability of the RCS to maintain the steam generator tubes intact and for the secondary side to isolate.

3. It is assumed that when exposed to high pressure plant core damage states the probability of a steam generator tube failing prior to failure of the reactor system component is 0.5. It is also assumed that a thermally-induced steam generator tube rupture is classified as a large early release.

4. A conditional containment failure probability (CCFP) of 0.01 due to high pressure melt ejection (HPME) is selected and used as a bounding value for the combined effects of RCS piping failure and HPME induced containment failure for all of the CEOG plants. This is based on a recent assessment performed by Sandia National Laboratories [Ref. 7].

6.3.2 General Approach

Plant specific evaluations were performed by each participating CEOG member utility to determine the impact on plant risk resulting from a DC power source being out of service. Results of these evaluations were then compared using the following risk measures:

Core Damage Probability (CDP): This risk measure represents the probability of core damage occurring. The core damage probability is approximated by multiplying the estimated core damage frequency by a time period.

Conditional Core Damage Frequency (CCDF): This risk measure represents the core damage frequency conditional on some event, such as equipment being out of service. CCDF is calculated by re-quantifying the PSA model after adjusting the basic event probabilities associated with the out of service equipment.

Increase in Core Damage Frequency (ΔCDF): This risk measure represents the difference between the CCDF evaluated for a DC power source *out of service* minus the CCDF evaluated for a DC power source *not out of service*. Using the battery for example, the following expression can be used to estimate the increase in CDF:

$$\Delta CDF = CCDF_{OOS} - CDF_B \tag{6-1}$$

where,

ΔCDF	=	Increase in core damage frequency (per year)
$CCDF_{OOS}$	=	Conditional core damage frequency given that a class 1E battery is out of service (per year)
CDF_B	=	Conditional core damage frequency given that a class 1E battery is not out of service (per year)

Incremental Conditional Core Damage Probability (ICCDP): This measure is the incremental increase in risk associated with a DC source out of service for a period of time. This time period may be over the full duration of the AOT/CT, or over the actual maintenance duration. ICCDP measures the increase in probability of core damage occurring during the AOT/CT, or the outage time, from the baseline value. The value is obtained by multiplying the increase in CDF by the AOT, which can be expressed as:

$$ICCDP = \left[CCDF_{OOS} - CDF_B\right] x \left[\frac{AOT}{8760}\right] \tag{6-2}$$

where,

ICCDP	=	Incremental conditional core damage probability for the full allowed outage time
$CCDF_{OOS}$	=	Conditional core damage frequency given that a class 1E battery is out of service (per year)
CDF_B	=	Conditional core damage frequency given that a class 1E battery is not out of service (per year)
AOT	=	Allowed outage time (in hours)

The methodology used to calculate the above risk measures is presented below. For plants with PSAs that were quantified using RISKMAN methodology, equivalent steps were taken to meet the intent of the methodology presented below.

Each CEOG member utility used its current PSA to assess CCDFs given that a DC power source is out of service. Each member utility verified that the appropriate basic events are contained in the core damage cutsets (for internal events) used to determine the AOT risk contributions. This verification was performed as the first task in calculating the CCDFs. Using the core damage cutsets, the following or equivalent steps were performed to calculate the CCDF resulting from a DC power source out of service.

(1) Identify the independent basic event with the highest failure probability that is associated with the DC power source that is out of service and set it to true (i.e., failure probability of 1.0).

(2) Set all other independent basic event probabilities for the DC power source identified in item (1) to false (i.e., failure probability of 0.0). This includes the basic event(s) that represent unavailability due to test/maintenance.

(3) Set the basic event(s) that represent the unavailability of the remaining DC power source(s) due to test/maintenance to false.

(4) Set common cause basic event probability for the DC power sources to false because the remaining DC power source(s) are verified to be operable and not affected by common cause failure prior to entry into the LCO ACTION STATEMENT.

(5) After making the appropriate changes to the basic event probabilities, re-quantify the core damage cutsets. The resulting value represents the CCDF given that the specified DC power source is out of service.

The CCDF given that a DC power source is not out of service was obtained by setting the basic event that represents unavailability due to test/maintenance to false. No adjustment was made

to the common cause basic event probability or to the other independent basic event probabilities for this case. The core damage cutsets were then re-quantified.

Large Early Release Frequency (LERF): This risk measure is defined as the frequency of those accidents leading to significant, unmitigated release of radioactivity from containment in a time frame prior to effective evacuation of the close-in population such that there is a potential for early health effects. This includes events that lead to early containment failure at or shortly after vessel breach, containment bypass events, and loss of containment isolation. The definition used by the CEOG member utilities varies in detail, however in practice the utility definitions are consistent with that of the NRC. LERF is evaluated by summing all severe accident events leading to: (a) containment bypass events, (b) core damage events occurring in conjunction with loss of containment isolation, and (c) early energetic failures of the reactor vessel that cause containment failure. Basemat melt-through events and gradual over-pressurization events were not classified as early containment failures. These failures were considered to result in a sufficiently gradual challenge that evacuation of the close-in population surrounding the plant may be accomplished prior to containment failure.

CEOG plants with automated LERF models have provided LERF estimates conditional on a DC power source out of service, as well as a DC power source not out of service. A simplified LERF model was applied to establish bounding estimates for incremental conditional large early release probability (see below) for the remaining CEOG plants.

Incremental Conditional Large Early Release Probability (ICLERP): This measure is the incremental risk associated with a DC power source out of service for a period of time. This time period may be over the full duration of the AOT/CT, or over the actual maintenance duration. ICLERP measures the increase in probability of large early release occurring during the AOT/CT, or the outage time, from the baseline value.

For the CEOG plants with automated LERF models, ICLERP can be obtained by multiplying the increase in LERF by the AOT, which can be expressed as:

$$ICLERP = \left[CLERF_{OOS} - CLERF_{B}\right] x \left[\frac{AOT}{8760}\right] \qquad (6\text{-}3)$$

where,

ICLERP = Incremental conditional large early release probability for the full allowed outage time

$CLERF_{OOS}$ = Conditional large early release frequency given that a class 1E battery is out of service (per year)

$CLERF_B$	=	Conditional large early release frequency given that a class 1E battery is not out of service (per year)
AOT	=	Allowed outage time (in hours)

For the CEOG plants without automated LERF models, bounding ICLERP estimates were developed by using a simplified large early release event tree. In general, the large early release (LER) event tree sums the incremental contributions from (a) containment bypass events (including ISLOCAs and induced Steam Generator Ruptures), (b) loss of containment isolation events, and (c) energetic containment failures.

LERF assessments are provided for at power operation only. The simplified LER event tree (see Figure 6-1) focuses on causes for, and interrelationships of, the containment large early release contributors following an event which is adversely impacted by unavailability of a class 1E battery or its associated charger. The input into the LER event tree is the ICCDP. The fraction of ICCDP that propagates into a large early release event is established based on responses to the following events:

- Containment isolation
- Secondary side depressurization of the steam generator(s)
- Occurrence of thermally-induced SGTR
- Containment failure due to RPV lower head failure

In evaluating the LERF increases, it was conservatively assumed that all incremental core damage events lead to high pressure RCS core damage states. It was also assumed that no operator actions were performed to depressurize the RCS prior to failure of the reactor vessel lower head. The top events in the LER tree are described and modeled as follows:

Containment Isolated

This top event defines the state of containment integrity prior to the event. Large early fission product releases could occur when a severe accident occurs in conjunction with an initially unisolated containment. Typically, these events are very small contributors to the total containment failure probability. The probability of containment isolation failure used in the PSAs for the CEOG member utilities varies from 1.0E-4 to approximately 3.0E-3. The upper limit was selected as a bounding value.

Steam Generator Depressurized

It is conservatively assumed that all incremental core damage events lead to a core melt condition at high RCS pressure. Therefore, the potential for these events becoming a large early

release is dependent upon the ability to maintain the steam generator tubes intact and the secondary side isolated. Both of these factors are reflected in the response to this query. Steam generator depressurization is assumed to occur either via prior operator action or failure of a Main Steam Safety Valve (MSSV) to close. Since the Accident Management Guideline (AMG) suggests that operators not depressurize the steam generator without the ability to cool the steam generator tubes, the potential for operator failure is limited. The probability of the MSSV failing open is taken as 0.1.

Thermally-Induced SGTR Occurs

Given a steam generator depressurization, it is conservatively assumed that the probability that a steam generator tube will fail prior to failure of another reactor coolant system component is 0.5. (This factor is a conservative representation of the failure probability and will be dependent on the steam generator design, age, operating history, and time in cycle.) The probability of steam generator tube failure reduces significantly if the steam generators remain pressurized. For this condition, the probability of thermally-induced steam generator tube rupture is conservatively assumed to be 0.01.

Additional conservatism taken in the thermally-induced SGTR assessment includes neglect of the potential for the challenged PSV/PORV to stick open and the neglect of any operator actions to depressurize the RCS. Both of these factors can result in significant reduction to the LERP. For example, NRC assessments of PSV/PORV challenges during station blackout scenarios indicate a large number (~35 water/two phase) challenges of the PSVs prior to core uncovery. Such challenges have a high (~14%) probability of failing the PSV, resulting in a potentially open valve [Ref. 11].

RPV Lower Head Failure Result in Containment Failure

Failure of the Reactor Pressure Vessel (RPV) lower head releases an energetic discharge of molten core materials into the containment. Recent assessment of direct containment heating (DCH) induced containment threats performed by Sandia National Laboratories [Ref. 7] concluded that the conditional containment failure probability (CCFP) is less than 0.01 for FCS, PVNGS 1, 2 & 3, SL-1&2, and WSES-3. The calculations for these plants were based on an assessment of DCH induced pressure loading and the plant specific fragility curves. ANO-2, MP-2, Palisades, and SONGS 2&3 were assessed to have CCFPs between 0.01 and 0.1. One utility (CC-1&2) failed the screening criterion established by the methodology described in Reference 7. (CC-1&2 have a CCFP of 0.149 and also failed the success criterion of the methodology.) The CEOG plants that did not satisfy the screening or success criterion required additional analyses to resolve the DCH issue. After considering the High pressure melt ejection (HPME) probabilities given core damage for these plants, the Sandia assessment concluded that the CCFPs for all CE designed PWRs would be approximately 0.01 or less when considering

thermal induced failure of RCS piping in advance of reactor vessel lower head failure. Therefore, a CCFP of 0.01 due to HPME is selected and used as a bounding value for the combined effects of RCS piping failure and HPME induced containment failure for all of the CEOG plants.

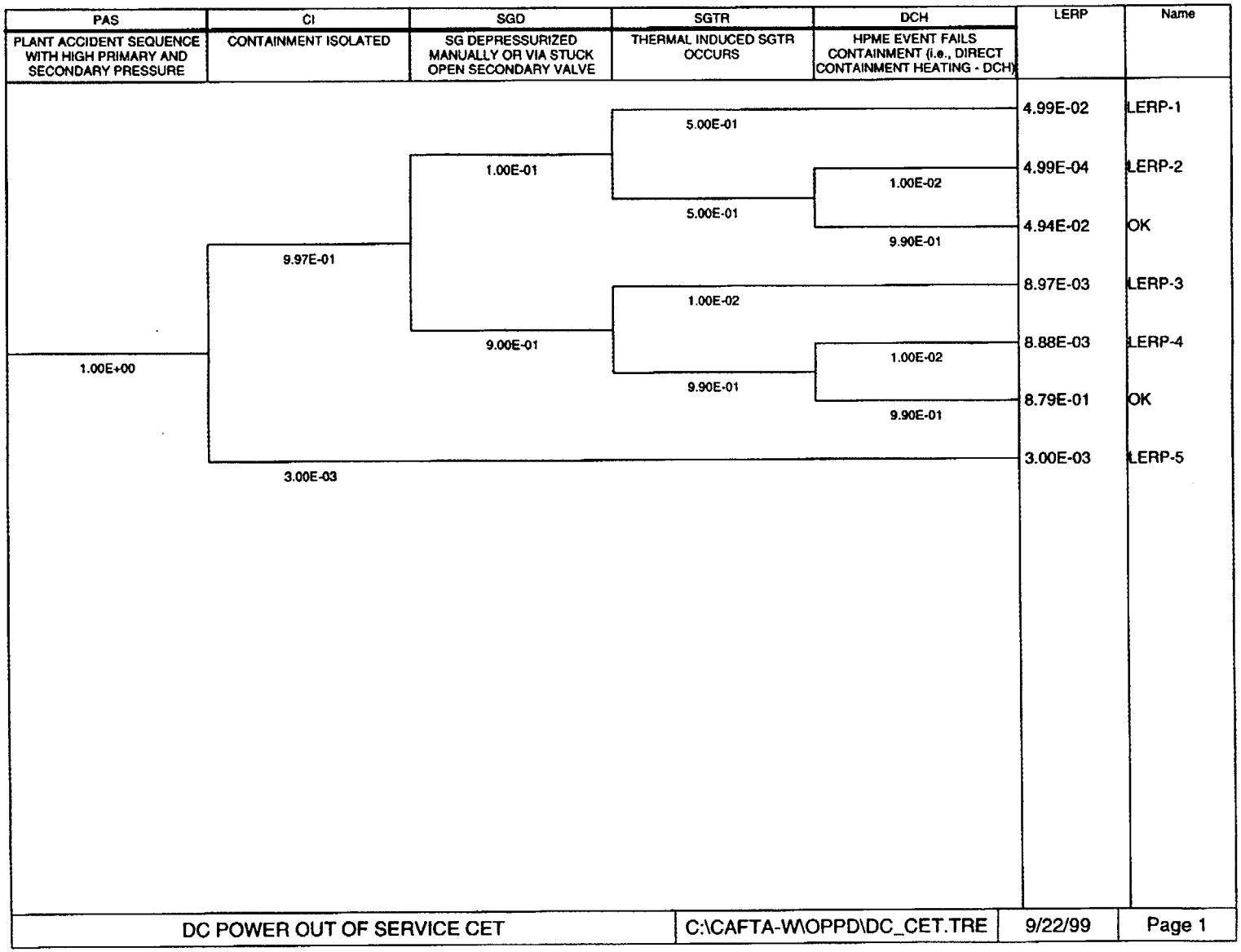

Figure 6-1
Simplified Large Early Release Event Tree

6.3.3 Summary of Results for "At Power" Risk

6.3.3.1 ICCDP Assessment

The appropriate CCDFs supplied by the CEOG member utilities were substituted into Equation (6-1) to obtain the risk resulting from an increase in core damage due to a DC power source out of service. The CCDFs shown in Table 6-2 are bounding values for the various CE designed PWRs. Since the class 1E DC electrical power system configuration varies from plant to plant, the configuration that produced the bounding CCDF also varies among the CEOG member utilities. The loading of the DC electrical power subsystems varies from plant to plant. This also is an important contributor to the CCDF. The bounding configuration for each plant is shown in the figure identified in Table 6-2. The figure provides a pictorial representation of the DC component (i.e., battery or associated charger) that is assumed to be out of service, thus causing the LCO to be entered. The out of service equipment is shown with an "X" drawn through it. Potential AOT durations were selected and substituted along with the CCDFs into Equation (6-2) to obtain the risk resulting from incremental core damage probability due to a DC power source out of service. The resulting ICCDPs for the CEOG member utilities are summarized in Table 6-2.

Table 6-2
ICCDP Estimates due to Unavailability of a Battery/Battery Charger

CEOG Plant	Configuration Analyzed	CDF_B [Per Year]	$CCDF_{OOS}$ [Per Year]	Full AOT [hours]	ICCDP	ICCDP Increase Over Current AOT
ANO-2	Battery 2D11 out of service (See Figure 1 of Attachment 3)	2.08E-5	6.79E-4	24	1.80E-6	1.65E-6
				8	6.01E-7	4.51E-7
				2	1.50E-7	0
CC-1&2	[Note 1]	[Note 1]	[Note 1]	24	-	-
				8	-	-
				2	-	-
FCS	Battery Charger #2 out of service (See Fig 2 of Attachment 3) [Note 4]	1.85E-5	7.42E-4	24	1.98E-6	1.82E-6
				8	6.61E-7	4.96E-7
				2	1.65E-7	0
MP-2	[Note 1]	[Note 1]	[Note 1]	24	-	-
				8	-	-
				2	-	-
PAL	Battery #2 out of service (See Figure 3 of Attachment 3)	5.15E-5	2.05E-4	24	4.21E-7	[Note 2]
				8	1.40E-7	
				2	3.50E-8	
PVNGS 1, 2 & 3	[Note 1]	[Note 1]	[Note 1]	24	-	-
				8	-	-
				2	-	-
SONGS 2 & 3	Battery B008 out of service (See Figure 6 of Attachment 3)	6.99E-5	3.39E-4	24	7.37E-7	6.95E-7
				8	2.46E-7	1.90E-7
				2	6.14E-8	0

Table 6-2 (Cont'd)
ICCDP Estimates due to Unavailability of a Battery/Battery Charger

CEOG Plant	Configuration Analyzed	CDF_B [Per Year]	$CCDF_{OOS}$ [Per Year]	Full AOT [hours]	ICCDP	ICCDP Increase Over Current AOT
SL-1	[Note 1]	[Note 1]	[Note 1]	24	-	-
				8	-	-
				2	-	-
SL-2	[Note 1]	[Note 1]	[Note 1]	24	-	-
				8	-	-
				2	-	-
WSES-3	Battery 3AB-S out of service (See Figure 5 of Attachment 3)	1.12E-5	2.05E-5	24	2.55E-8	5.54E-8
				8	8.49E-9	1.51E-8
				2	2.12E-9	0

Notes for Table 6-2
1. Relevant data from this plant will be provided at the time of submittal.
2. Palisades TS includes a 24 hour AOT for DC subsystem INOPERABLE.
3. ICCDP increase over current AOT is defined as the difference between the ICCDP for the proposed AOT and the ICCDP for the current AOT.
4. The limiting DC power configuration analyzed for FCS involves battery charger #2 being out of service. At FCS, the current Tech Spec allows an 8 hour outage time for a battery charger and none for the battery. The ICCDPs for FCS shown above confirms the appropriateness of the AOT for the chargers. These values are used as bounding values for ICCDP due to a battery out of service.

The ICCDP results summarized in Table 6-2 are based on the full outage duration of 2 hours, 8 hours or 24 hours. The results for CEOG member utilities that provided information show that the plant risk is below or marginally above the acceptance guideline value of 5.0E-07 for a proposed AOT of 8 hours.

The class 1E DC electrical power systems at SONGS 2&3 and WSES-3 have added redundancy associated with the battery and battery charger. This feature results in a plant risk due to ICCDP, which is well below the acceptance guideline value for a proposed AOT of 8 hours. The risk for these units is still within the bounds of the acceptance guideline even for a proposed AOT of 24 hours. Hence for plants currently pursuing the AOT extension, the plant risk for a proposed AOT of 24 hours is within or somewhat above the acceptance guideline value. When the average LCO entry duration is considered, along with SCE's contingency actions, the risk for both plants will be within the acceptance guidelines. It should be noted that the Palisades plant already includes a 24 hour AOT for DC battery inoperability. The results for the Palisades evaluation confirm the appropriateness of the existing TS.

In the majority of cases, loss of offsite power initiator dominates the plant risk when a battery is out of service. With the battery out of service concurrent with a loss of offsite power event, the associated emergency diesel generator will fail to start. This condition results in the inoperability of one train of safeguard equipment. A combined failure of the remaining EFW or AFW pump(s) will result in the loss of secondary side heat removal capability. Core damage will occur following the consequential failure of once through cooling, for those plant equipped

with Feed and Bleed capability. For the plants without Feed and Bleed capability, core damage will also occur following loss of the alternate secondary heat removal capability.

6.3.3.1.1 Other Considerations

The ICCDP assessment described above is based on the current PSA models for the CEOG member utilities. The remainder of this subsection addresses concerns that are unique to the PSA joint application for extending the allowed outage time for the DC power source. These concerns involve the battery charger capacity for handling transient loading requirements and the potential increase in loss of DC bus frequency, given that a class 1E 125 VDC battery is out of service. The inoperability of a battery due to non-functional seismic restraint is also a concern. These concerns may not be addressed fully in the current PSA models for all of the CEOG member utilities. Assessments of these concerns are therefore provided in the remainder of this subsection in order to assess the significance of their risk impact.

(a) <u>Battery Charger Capacity and Ability to Handle Post-Trip Transient Loading with One DC Battery Out of Service</u>

The ICCDP for extending the allowed outage time for a class 1E 125 VDC battery was determined based on the core damage frequency conditional on a battery being out of service for the full duration of the AOT. With the battery removed from service the respective battery charger(s) are relied on as the source of power for the affected class 1E 125 VDC bus. A concern has been raised regarding the adequacy of the charger(s) to handle the transient loading requirements. The chargers are designed to trip off line when the loading demand exceeds its capacity. This may be problematic for the configuration with a battery out of service. A plant trip and consequential generation of a safeguard signal (i.e., SIAS) would require the actuation of the emergency diesel generators and other safeguard equipment. Battery chargers are often sized to meet the plant steady state load requirements. With a battery out of service, the capacity of the associated battery charger(s) may not be adequate for handling the transient loading requirement of affected safeguard equipment. The transient loading demand on the battery charger(s) following reactor trip would cause the battery charger(s) to trip off line, thus causing a loss of the affected class 1E 125 VDC bus. Loss of DC power would prevent the affected safeguard equipment from starting.

To address the above concern, the descriptions of the class 1E 125 VDC system provided in the updated FSARs were reviewed and plants were surveyed to determine the capacity of each battery charger. The capacity of a charger for those units that provided such information was typically 300 Amp to 400 Amp. These capacities are not generally sufficient to meet the demands of the full spectrum of accidents. One exception was ANO-2, which selected the capacity of the battery charger(s) to be adequate to meet the transient loading requirements if the associated battery is out of service. The class 1E 125 VDC FSAR system description for ANO-2 states that *"the chargers may be used as battery eliminators so that they can supply 125 volt DC*

power if the associated battery has to be taken out of service for testing or becomes unavailable for any reason". Investigation also indicated that the capacity of the battery chargers at Palisades and WSES-3 is capable of handling the transient loading requirements. Therefore, the battery chargers at ANO-2, Palisades, and WSES-3 are considered as backups for the associated battery.

The battery chargers at the other units for the CEOG member utilities may not be capable of satisfying the transient loading requirements for all initiating events considered in the PRAs. With a battery out of service, the associated battery chargers would trip off line in attempting to satisfy a transient loading demand. This would result in a consequential loss of the affected class 1E 125 VDC bus. The class 1E 125 VDC FSAR system descriptions for PVNGS 1, 2 & 3, SONGS 2&3, SL 1&2, and CC-1&2 indicate that the capacity of the charger is based on the normal steady-state loads and the charging requirement for the associated battery. Certain plants modeled operability of the DC bus as requiring both the battery and the respective chargers. For example, CC-1&2 and SONGS 2&3 indicates that successful operation of a 125 VDC subsystem, as modeled in the PRA for these units, is dependent on both the battery charger and battery being operable. This implies that a 125 VDC bus would eventually lose its ability to power the associated loads if either the battery or battery charger becomes unavailable due to hardware failure or removal from service.

The remaining CEOG utilities with battery chargers that may not be capable of handling transient loading demand requirements for all initiating events if the associated battery is out of service include FCS, MP-2, PVNGS 1, 2 & 3, and SL 1&2. Of these units, the FCS, MP-2, and SL 1&2 have fast transfer capability while the PVNGS 1, 2 & 3 do not. For the units without fast transfer capability, realignment of offsite power to the safeguard buses is not performed following a reactor trip because these buses are already connected to the switchyard. For the units with fast transfer capability, a relatively small number of breakers is involved in the realignment of the AC power sources following a reactor trip. The capacity of the battery chargers is adequate to handle the transient loading requirements caused by the realignment of AC power sources following a reactor trip caused by an uncomplicated transient. Hence, the battery chargers would not trip off line, given that the associated battery is out of service. However, for complicated transient events and events that involve safeguards actuation, the capacity of the battery chargers alone would not be adequate for handling the transient loading demand requirements following a reactor trip. Such events include loss of offsite power and the various categories of LOCAs. For these initiating events the battery chargers would trip off line following a reactor trip, thus causing a consequential loss of the affected class 1E 125 VDC bus. The inability of the battery chargers to handle complicated transient events and events involving safeguards actuation is applicable to all of the above units, those with and without fast transfer capability.

For FCS, MP-2, PVNGS 1, 2 & 3, and SL 1&2, the capacity of the battery chargers alone is inadequate for handling the transient loading requirements resulting from initiating events that

require the starting of the EDGs. An assessment was therefore performed to estimate the conditional core damage frequency, given that a class 1E 125 VDC battery is out of service and the capacity of the associated battery chargers cannot handle the transient loading demand requirements. The assessment assumes that the affected battery chargers will trip off line following a reactor trip caused by events that require starting of the EDGs. Tripping of the battery chargers results in a consequential loss of the associated class 1E 125 VDC bus. The assessment was performed for a representative unit for the CEOG member utilities.

Results obtained for assessing the risk impact due to inadequate battery charger capacity show that the dominant contributors to the conditional core damage frequency involve core damage scenarios initiated by a loss of offsite power. A plant configuration with a class 1E 125 VDC battery out of service that experiences a loss of offsite power causes the associated battery charger to lose its source of power. Consequently, the affected DC bus becomes unavailable regardless of the charger capacity. For this condition, the affected EDG will not start and one train of safeguard equipment will become inoperable because of the DC power dependency. A comparison of the results from this assessment with results for the case with adequate battery charger capacity shows that the dominant contributors to core damage frequency are the same. In either case, with or without adequate battery charger capacity, loss of offsite power is the dominant contributor to risk. Consequently, the results presented in Table 6-2 are applicable to battery chargers with and without adequate capacity to handle transient loading demand requirements.

(b) Impact of DC Battery Unavailability on the Potential for an Increase in Loss of DC Bus Frequency

With a class 1E 125 VDC battery out of service, the associated battery chargers are the only source of power for the affected DC bus. During this plant configuration for the proposed AOT, failure of the battery chargers would cause an increase in the loss of DC bus frequency. A bounding assessment was performed for the CEOG member utilities to determine the risk impact due to the potential increase in loss of DC bus frequency with a battery out of service. The assessment may or may not reflect current operating practices of the DC subsystems allowed by the current 2 hour AOT at all of the CEOG member utilities. The intent of the assessment is to determine the impact on loss of DC bus frequency with the battery charger(s) as the sole source of power for the affected DC bus during the proposed extension to the AOT.

With a class 1E 125 battery out of service, the dominant contributor to loss of the associated DC bus is failure of the battery chargers. The class 1E DC power configuration schematics provided in Attachment 2 show that a DC bus for all CE designed units with the exception of SONGS 2&3 can be powered by two battery chargers and the associated battery. For SONGS 2&3, a single battery charger and the associated battery provide power to each of the DC buses. The ICCDP

given the potential for increasing the loss of a DC bus frequency with a battery out of service can be determined by the following expression:

$$ICCDP_{BATT} = \lambda_c \; AOT \; CCDP_{LODC} \tag{6-4}$$

where,

$ICCDP_{BATT}$	=	Incremental conditional core damage probability given the potential increase in loss of a DC bus frequency
λ_c	=	The overall failure rate of the battery chargers (per hour)
AOT	=	Allowed outage time (hours)
$CCDP_{LODC}$	=	Conditional core damage probability given a loss of DC bus

The assessment used generic failure data for the battery chargers, and an assumed bounding value for CCDP given the loss of a DC bus based on the current PRAs for the CE designed plants. A generic failure rate of 2.39E-05 per hour [Ref. 8] and a beta factor of 1.26E-02 [Ref. 9] were used to estimate the overall failure rate of 3.01E-07 per hour for two battery chargers. A $CCDP_{LODC}$ value of 2.0E-02 was assumed based on a review of current PRA information for the CE designed plants. In the majority of cases, the $CCDP_{LODC}$ is approximately an order of magnitude smaller than 2.0E-02. Therefore, a $CCDP_{LODC}$ of 2.0E-02 is considered to be bounding for all of the CE designed PWRs.

Substituting the above values and an AOT of 2 hours into Equation (6-4) yields a value of 1.2E-08 for $ICCDP_{BATT}$. Similar substitutions for an AOT of 8 or 24 hours yield a $CCDP_{BATT}$ value of 4.8E-08 and 1.4E-7, respectively. These values are not included in the results presented in Table 6-2 and would contribute less than 10% to the ICCDP increase over the current AOT. Based on the above assessment, the ICCDP due to the potential for increasing loss of DC bus frequency with the associated battery out of service is small and can be neglected.

It should be noted that the overall failure rate used for the battery chargers is not applicable to SONGS 2&3 because each of the DC subsystems at this utility includes a single battery charger. However, SONGS 2&3 procedure does not allow the battery charger to be the sole source of power to the associated DC bus. At SONGS 2&3, the removal of a class 1E battery from service requires the associated vital bus to be transferred to its alternate power supply, then the battery charger is also removed from service. Therefore, the battery and associated battery charger are always operated in tandem. Consequently, the potential increase in loss of a DC bus frequency with a battery out of service is negligible at SONGS 2&3.

As indicated, generic failure data for the battery chargers was used in the assessment. Such data was obtained from plant configurations where both the battery and associated battery charger(s) are connected to the class 1E DC bus. The battery charger may become less reliable

when it is the sole source of power to a class 1E DC bus. To address this concern, a sensitivity evaluation was performed by varying the independent failure rate and beta factor of a battery charger. The sensitivity values were then substituted into Equation (6-4) to estimate the increase in CCDP. The results of the sensitivity evaluation show that by increasing both the independent failure rate of a battery charger and the beta factor by an order of magnitude, the incremental contribution to CCDP for the proposed 24 hour AOT duration would be less than 5.0E-8. Refer to Question 6 in Attachment 4 for details.

(c) Battery Inoperability Due to Non-functional Seismic Restraint

The battery seismic restraint may be removed to accomplish the necessary maintenance on the battery. Even though the function of the battery is restored after maintenance it would still be regarded as inoperable without the seismic restraint. The risk for an 8 hour exposure associated with the non-functional seismic restraint is bounded by the conditional core damage probability of 3.9E-9, as discussed under the "External Event Considerations" in Section 6.2. Similarly, the risk for a 24 hour exposure is bounded by the conditional core damage probability of 1.1E-8, which is also discussed under the "External Event Considerations".

6.3.3.2 ICLERP Assessment

The appropriate LERFs supplied by those CEOG member utilities with automated LERF models were substituted into Equation (6-3) to obtain the risk resulting from an increase in large early releases due to a DC power source out of service. Estimates for ICLERPs were developed for the remaining CEOG plants based on the conservative approach described in Section 6.3.1. This approach sums the incremental LER contributors identified in the simplified LER event tree shown in Figure 6-1. Accordingly, the ICLERP is estimated by multiplying the incremental contributors to large early release with the associated ICCDP for the proposed AOT. The incremental contributors to large early release are identified in Figure 6-1 as event tree scenarios LERP-1 through LERP-5. A summary description for each of these scenarios is as follows:

LERP-1: This incremental contributor to large early release involves incremental core damage probability followed by an isolated containment, a depressurized steam generator due to stuck open MSSV, and thermal-induced steam generator tube rupture.

LERP-2: This incremental contributor to large early release involves incremental core damage probability followed by an isolated containment, a depressurized steam generator due to stuck open MSSV, steam generator tubes intact, and HPME failure of the containment.

LERP-3: This incremental contributor to large early release involves incremental core damage probability followed by an isolated containment, pressurized steam generators, and thermal-induced steam generator tube rupture.

LERP-4: This incremental contributor to large early release involves incremental core damage probability followed by an isolated containment, pressurized steam generators with tubes intact, and HPME failure of the containment.

LERP-5: This incremental contributor to large early release involves incremental core damage probability followed by failure to isolate the containment.

The simplified LER event tree was quantified for all of the CE designed PWRs for a normalized ICCDP. The results of the quantification are shown in Table 6-4. The conditional probability for each of the scenarios that contribute to large early release is provided along with the sum of the contributions for the plants.

Table 6-3
Normalized Bounding CLERP Estimates due to Unavailability of a Battery/Battery Charger Using Simplified LERF Model

CEOG Plant	T-I SGTR Probability	LERP-1	LERP-2	LERP-3	LERP-4	LERP-5	Total LERP
ANO-2, PAL, WSES-3 (Note 1)	0.5	4.99E-2	4.99E-4	8.97E-3	8.88E-3	3.00E-3	7.12E-2

Notes for Table 6-3
1. A bounding value of 0.01 is used for CCFP due to HPME in the calculations.

The normalized total LERP shown in Table 6-3 is used to estimate the ICLERP for those CEOG member utilities that do not have an automated LERF model. This is accomplished by multiplying the normalized total LERP with the ICCDP for the plant of concern. The resulting plant risks are summarized in Table 6-4.

The ICLERP results presented in Table 6-4 show that the plant risk for the CEOG member utilities that provided information is below the acceptance guideline value of 5.0E-8 for a proposed AOT of 8 hours. Plant specific evaluations show that the risk due to ICLERP is also below the acceptance guideline value for a proposed AOT of 24 hours at selected units among the CEOG utilities. Generally, these units include CE designed PWRs that have increased redundancies in class 1E DC power systems (i.e., SONGS 2&3 and WSES-3) or additional plant design features that minimizes LOP events at the site (i.e., the Palisades unit).

Table 6-4
ICLERP Estimates due to Unavailability of a Battery/Battery Charger

CEOG Plant	LERF Model	$CLERF_B$ [Per Year]	$CLERF_{OOS}$ [Per Year]	Full AOT [hours]	ICCDP [From Table 6-2]	ICLERP
ANO-2	Simplified LER event tree	[Note 1]	[Note 1]	24	1.80E-6	1.28E-7
				8	6.01E-7	4.28E-8
				2	1.50E-7	1.07E-8
CC-1&2	[Note 2]	[Note 2]	[Note 2]	24	-	-
				8	-	-
				2	-	-
FCS	Automated LERF model	2.56E-6	4.16E-5	24	1.98E-6	1.07E-7
				8	6.61E-7	3.57E-8
				2	1.65E-7	8.91E-9
MP-2	[Note 2]	[Note 2]	[Note 2]	24	-	-
				8	-	-
				2	-	-
PAL	Simplified LER event tree	[Note 1]	[Note 1]	24	4.21E-7	3.00E-8
				8	1.40E-7	9.97E-9
				2	3.50E-8	2.49E-9
CEOG Plant	LERF Model	$CLERF_B$ [Per Year]	$CLERF_{OOS}$ [Per Year]	Full AOT [hours]	Total ICCDP [From Table 6-2]	ICLERP
PVNGS 1, 2 & 3	[Note 2]	[Note 2]	[Note 2]	24	-	-
				8	-	-
				2	-	-
SONGS 2&3	Automated LERF model	1.32E-6	1.22E-5	24	7.58E-7	2.98E-8
				8	2.53E-7	9.94E-9
				2	6.32E-8	2.48E-9
SL-1	[Note 2]	[Note 2]	[Note 2]	24	-	-
				8	-	-
				2	-	-
SL-2	[Note 2]	[Note 2]	[Note 2]	24	-	-
				8	-	-
				2	-	-
WSES-3	Simplified LER event tree	[Note 1]	[Note 1]	24	6.04E-8	4.30E-9
				8	2.01E-8	1.43E-9
				2	5.03E-9	3.58E-10

Notes for Table 6-4
1. Not required for the simplified LERF model
2. Relevant data from this plant will be provided at the time of submittal

6.3.4 LERP Sensitivity Studies

(a) Thermally-Induced SGTR

Thermally-induced SGTR depends on the steam generator design, age, operating history, and the time in cycle. Each factor or combination of factors may influence the likelihood of large

early releases. In this evaluation, a conservative probability of 0.5 was assumed for failure of the steam generator tube prior to failure of the rector vessel lower head. A sensitivity evaluation was performed to determine the impact of the likelihood of thermally-induced SGTR on large early releases. This involved varying the probability of thermally-induced SGTR from 0.6 to 0.1 and then requantifying the simplified LER event tree to estimate the normalized LERPs for each CEOG plant group. Variations in the probability for thermally-induced SGTR affect the probabilities of large early scenarios LERP-1 and LERP-2 (see Figure 6-1) for all of the CEOG plant groups. All of the other probabilities within the plant group for the remaining large early scenarios are unaffected. The results of this sensitivity evaluation are summarized in Table 6-5.

Table 6-5
Sensitivity Results for Thermally-Induced SGTR

CEOG Plant Group	T-I SGTR Probability	LERP-1	LERP-2	LERP-3	LERP-4	LERP-5	Total LERP
ANO-2, PAL, WSES-3 (Note 1)	0.6	5.98E-2	3.99E-4	8.97E-3	8.88E-3	3.00E-3	8.10E-2
	0.5	4.99E-2	4.99E-4	8.97E-3	8.88E-3	3.00E-3	7.12E-2
	0.4	3.99E-2	5.98E-4	8.97E-3	8.88E-3	3.00E-3	6.13E-2
	0.3	2.99E-2	6.98E-4	8.97E-3	8.88E-3	3.00E-3	5.14E-2
	0.2	1.99E-2	7.98E-4	8.97E-3	8.88E-3	3.00E-3	4.15E-2
	0.1	9.97E-3	8.97E-4	8.97E-3	8.88E-3	3.00E-3	3.17E-2

Notes for Table 6-5
1. A bounding value of 0.01 is used in the calculations for CCFP due to HPME.

Using the thermally-induced SGTR probability of 0.5 as the base case, the results in Table 6-5 indicate that the normalized LERP increases as the thermal-induced SGTR probability increases. As the thermally-induced SGTR probability decreases, the normalized LERP also decreases. The results of the sensitivity evaluation conclude that thermally-induced SGTR probability impacts the normalized LERP and consequently the plant risk associated with ICLERP for all of the CEOG plants.

(b) MSSV Failure Probability

The potential for core damage events at high RCS pressure becoming a large early release is dependent upon the ability to maintain the steam generator tubes intact and the secondary side isolated. In this evaluation a conservative probability of 0.1 was assumed for the MSSV failing open. A sensitivity evaluation was also performed to determine the impact of the likelihood of the MSSV failing open on large early releases. This involves varying the probability of MSSV failing open from 0.05 to 0.2 and then re-quantifying the simplified LER event tree to estimate the normalized LERP for each CEOG plant group. Variations of the probability for MSSV failing open affect the probabilities of large early scenarios LERP-1 through LERP-4 (see Figure 6-1) for all of the CEOG plant groups. The probability of large early scenario LERP-5 is not affected. The results of this sensitivity evaluation are summarized in Table 6-6.

Table 6-6
Sensitivity Results for MSSV Failing Open

CEOG Plant Group	MSSV Probability	LERP-1	LERP-2	LERP-3	LERP-4	LERP-5	Total LERP
ANO-2, PAL, WSES-3	0.050	2.49E-2	2.49E-4	9.47E-3	9.38E-3	3.00E-3	4.70E-2
	0.075	3.74E-2	3.74E-4	9.22E-3	9.13E-3	3.00E-3	5.90E-2
	0.100	4.99E-2	4.99E-4	8.97E-3	8.88E-3	3.00E-3	7.12E-2
(Note: A bounding value of 0.01 is used in the calculations for CCFP due to HPME)	0.125	6.23E-2	6.23E-4	8.72E-3	8.64E-3	3.00E-3	8.33E-2
	0.150	7.48E-2	7.48E-4	8.47E-3	8.39E-3	3.00E-3	9.54E-2
	0.175	8.72E-2	8.72E-4	8.23E-3	8.14E-3	3.00E-3	1.07E-1
	0.200	9.97E-2	9.97E-4	7.98E-3	7.90E-3	3.00E-3	1.20E-1

Using the MSSV failure probability of 0.1 as the base case, the results in Table 6-6 indicate that the normalized LERP increases as the MSSV failure probability increases. Likewise, as the MSSV failure probability decreases the normalized LERP also decreases. The results of this sensitivity evaluation conclude that the normalized LERP and consequently the plant risk associated with ICLERP are sensitive to MSSV failure probability.

This page intentionally blank.

7.0 CONFIGURATION RISK MANAGEMENT PROGRAM

Risk associated with the implementation of the proposed technical specification changes will be managed in accordance with the requirements of 10 CFR 50.65(a)(4). This regulation requires licensees to assess and manage the risk that may result from maintenance activities and applies to all modes of reactor operation.

This page intentionally blank.

8.0 SUMMARY AND CONCLUSIONS

This report provides the results of an evaluation for extending the AOT/ CT for the class 1E DC electrical power source from the current 2 hours to a minimum of 8 hours for the participating CEOG member utilities. For selected units, including SONGS 2&3 and WSES-3, plant specific evaluations demonstrate support for an AOT/CT extension of 24 hours. The increased AOT/CT reflects the additional redundancy in the class 1E DC electrical power sources at these units. The AOT/CT extension is sought to provide flexibility in the performance of surveillance testing, preventive and corrective maintenance of the DC electrical power sources (i.e., battery and its associated charger) during power operation. This will allow allocation of time for on-line maintenance, repair and testing of the DC electrical power sources. Justification of this AOT/CT modification was based on an integral review and assessment of plant operations, deterministic/design basis factors, and plant risk.

The plant risk associated with ICCDP was estimated as the product of the incremental core damage frequency and the proposed increase in AOT. The proposed increase in AOT/CT for a DC electrical power source was analyzed for a plant configuration that maximizes the conditional core damage frequency given that a DC power source is out of service. The plant-specific PSA models were used to perform the analysis. The ICCDP results show that the plant risks for the participating CEOG member utilities are below the acceptance guideline value of 5.0E-7 for a proposed AOT of 8 hours. The ICCDP results for SONGS 2&3, WSES-3 and Palisades also show that the plant risks for these units are below or marginally above the acceptance guideline value for a proposed AOT of 24 hours.

Since all of the CEOG member utilities do not have a LERF model in place, the plant risk associated with ICLERP was estimated using either an automated LERF model or a simplified LER event tree. The plant risk associated with ICLERP for the units with automated LERF models was estimated as the product of the incremental large early release frequency and the proposed AOT. The plant risk associated with ICLERP for the units without automated LERF models was estimated using a simplified LER event tree. This event tree focused on the causes for, and the interrelationships of, the containment large early release contributors following a class 1E DC power source being out of service. The ICCDP is propagated through the simplified LER event tree to determine what fraction contributes to large early release events based on the response to containment isolation, secondary side depressurization of the steam generator(s), occurrence of thermally-induced SGTR, and containment failures due to reactor vessel lower head failure. The insights obtained from the ICLERP results are similar to the insights for ICCDP. The ICLERP results show that the plant risks for the CEOG member utilities that provided data are below the acceptance guideline value of 5.0E-8 for a proposed AOT of 8 hours. The ICLERP results for the SONGS 2&3, WSES-3 and Palisades units also

show that the plant risks for these units are below the acceptance guideline value for a proposed AOT of 24 hours.

The plant risks associated with ICCDP and ICLERP cover the inoperability of a class 1E DC electrical power source for the proposed AOT due to non-common cause faults. Common cause faults are not evaluated in this report because such a condition is governed by the "3.0.3" LCO (or equivalent for plants with customized TSs). Implementation of the CRMP will provide guidance for assuring that confirmation or verification of the remaining DC electrical power subsystem(s) is (are) operable.

The proposed extension of the AOT/CT was evaluated from the perspective of the various risks associated with plant operation. Incorporation of the proposed extension of the AOT/CT into the TSs may result in a negligible to small increase in the "at power" risk. The instantaneous plant risk associated with entry into the proposed LCO Action Statement will be controlled via the plant's CRMP and will be strongly dependent on the extent of DC power functionality. It is expected that the primary usage of the proposed extended AOT/CT will involve activities with negligible plant risk. The results of this evaluation demonstrate that the proposed AOT/CT extension provides plant operational flexibility while simultaneously allowing plant operation with an acceptable level of risk. The results also demonstrate that the risk level associated with the proposed AOT/CT is below the regulatory guidelines set forth in Regulatory Guide 1.177.

9.0 REFERENCES

1. 10 CFR 50.65, Appendix A, "The Maintenance Rule".

2. NRC Regulatory Guide, "An Approach for Plant-Specific, Risk-Informed Decisionmaking: Technical Specifications", RG 1.177, August 1998.

3. NRC Regulatory Guide, "Availability of Electric Power Sources", RG 1.93, December 1974.

4. NRC Regulatory Guide, "An Approach for Using Probabilistic Risk Assessment in Risk-Informed Decisions On Plant-Specific Changes to the Licensing Basis", RG 1.174, July 1998.

5. NRC, "Standard Technical Specifications for Combustion Engineering Pressurized Water Reactors", NUREG-0212, July 9, 1982.

6. NRC, "Standard Technical Specifications: Combustion Engineering Plants", NUREG-1432, Rev. 1, April 1995.

7. Pilch, M. M., et al, "Resolution of the Direct Containment Heating Issue for Combustion Engineering Plants and Babcock & Wilcox Plants", NUREG/CR-6475, November 1998.

8. Gilbert, B. G., et al, "Nuclear Computerized Library for Assessing Reactor Reliability (NUCLARR), Data Manual – Part 3: Hardware Component Failure Data", NUREG/CR-4639, December 1990.

9. Marshall, F. M., et al, "Common-Cause Failure Parameter Estimations", NUREG/CR-5497, October 1998.

10. Letter, "Docket Nos. 50-361 and 50-362, Response to Generic Letter 88-20, Supplement 4, Individual Plant Examination of External Events (IPEEE), San Onofre Nuclear Generating Units 2 and 3", from W.C. Marsh (Southern California Edison Company) to US Nuclear Regulatory Commission, dated December 15, 1995.

11. USNRC, "Risk Assessment of Severe Accident Induced Steam Generator Tube Rupture", NUREG-1570, March 1998.

12. Millstone Nuclear Power Station Unit 2, Technical Specifications, Appendix "A" to License No. DPR-65, Section 3.8.2.3, Amendment No. 180.

13. St. Lucie Plant Unit 1, Technical Specifications, Appendix "A" to License No. NPF-67, Section 3.8.2.3, Amendment No. 94.

14. St. Lucie Plant Unit 2, Technical Specifications, Appendix "A" to License No. NPF-16, Section 3.8.2.1.

15. Arkansas Nuclear One Unit 2, Technical Specifications, Appendix "A" to License No. NPF-6, Section 3.8.2.3, Amendment No. 94.

16. Waterford Steam Electric Station Unit 3, Appendix A (Technical Specifications) to License No. NPF-38, Section 3.8.2.1.

17. Fort Calhoun Station Unit 1, Operating License No. DPR-40 Appendix A (Technical Specifications), Section 2.7, Amendment Nos. 162 & 180.

18. Palisades Plant Facility Operating License DPR-20, Appendix A, Technical Specifications, Section 3.7.4, Amendment No. 180.

Attachment 1

NUREG-1432 Revision 1, Section 3.8.4

(Pages 3.8.4-1 through 3.8.4-3)

3.8 ELECTRICAL POWER SYSTEMS

3.8.4 DC Sources - Operating

LCO 3.8.4 The Train A and Train B DC electrical power subsystems shall be OPERABLE.

APPLICABILITY: MODES 1, 2, 3, and 4.

ACTIONS

CONDITION	REQUIRED ACTION		COMPLETION TIME
A. One DC electrical power subsystem inoperable.	A.1	Restore DC electrical power subsystem to OPERABLE status.	2 hours
B. Required Action and associated Completion Time not met.	B.1	Be in MODE 3.	6 hours
	AND		
	B.2	Be in MODE 5.	36 hours

SURVEILLANCE REQUIREMENTS

SURVEILLANCE		FREQUENCY
SR 3.8.4.1	Verify battery terminal voltage is ≥ [129/258] V on float charge.	7 days
SR 3.8.4.2	Verify no visible corrosion at battery terminals and connectors. OR Verify battery connection resistance [is ≤ [1E-5 ohm] for inter-cell connections, ≤ [1E-5 ohm] for inter-rack connections, ≤ [1E-5 ohm] for inter-tier connections, and ≤ [1E-5 ohm] for terminal connections].	92 days

SURVEILLANCE REQUIREMENTS (continued)

SURVEILLANCE		FREQUENCY
SR 3.8.4.3	Verify battery cells, cell plates, and racks show no visual indication of physical damage or abnormal deterioration that could degrade battery performance.	[12] months
SR 3.8.4.4	Remove visible terminal corrosion and verify battery cell to cell and terminal connections are [clean and tight, and are] coated with anti-corrosion material.	[12] months
SR 3.8.4.5	Verify battery connection resistance [is ≤ [1E-5 ohm] for inter-cell connections, ≤ [1E-5 ohm] for inter-rack connections, ≤ [1E-5 ohm] for inter-tier connections, and ≤ [1E-5 ohm] for terminal connections].	[12] months
SR 3.8.4.6	**- NOTE -** This Surveillance shall not be performed in MODE 1, 2, 3, or 4. Verify each battery charger supplies ≥ [400] amps at ≥ [125/250] V for ≥ [8] hours.	[18 months]
SR 3.8.4.7	**- NOTES -** 1. The modified performance discharge test in SR 3.8.4.8 may be performed in lieu of the service test in SR 3.8.4.7 once per 60 months. 2. This Surveillance shall not be performed in MODE 1, 2, 3, or 4. Verify battery capacity is adequate to supply, and maintain in OPERABLE status, the required emergency loads for the design duty cycle when subjected to a battery service test.	[18 months]

SURVEILLANCE REQUIREMENTS (continued)

SURVEILLANCE		FREQUENCY
SR 3.8.4.8	**- NOTE -** This Surveillance shall not be performed in MODE 1, 2, 3, or 4.	
	Verify battery capacity is ≥ [80]% of the manufacturer's rating when subjected to a performance discharge test or a modified performance discharge test.	60 months AND 12 months when battery shows degradation or has reached [85]% of the expected life with capacity < 100% of manufacturer's rating AND 24 months when battery has reached [85]% of the expected life with capacity ≥ 100% of manufacturer's rating

Attachment 2

DC Electrical Power System Configurations at CE Designed PWRs

This attachment provides the configurations for the safety related DC electrical power system utilized by the CE PWRs. The configurations are presented as representative figures in this attachment. The following table identifies the configuration that is representative of the CE NSSS design.

Description of Configuration	Fig. No.	CEOG Plant
1. Two batteries with a dedicated battery charger per battery and one swing battery charger	1	Arkansas Nuclear One – Unit 2 Fort Calhoun Station Millstone Unit 2
2. Two batteries with two dedicated battery chargers per battery	2	Palisades Nuclear Plant
3. Two batteries with two dedicated battery charger per battery and a swing battery charger	3A 3B	St. Lucie Unit 1 St. Lucie Unit 2
4. Three batteries with two dedicated battery chargers per battery	4	Waterford Unit 3
5. Four batteries with a dedicated battery charger per battery [Note 1]	5	San Onofre Unit 2 San Onofre Unit 3
6. Four batteries with a dedicated battery charger per battery and two swing battery chargers	6	Palo Verde Unit 1 Palo Verde Unit 2 Palo Verde Unit 3
7. Four batteries with two dedicated battery chargers per battery [Note 2]	7	Calvert Cliffs Unit 1 Calvert Cliffs Unit 2

Notes:

1. A spare battery charge is available for on-line replacement of any of the four normal battery chargers.
2. A reserve 125 VDC electrical system is also available. This system consists of one battery, one battery charger, and associated DC switching equipment. Only the battery may be transferred for replacement of any of the other four batteries.

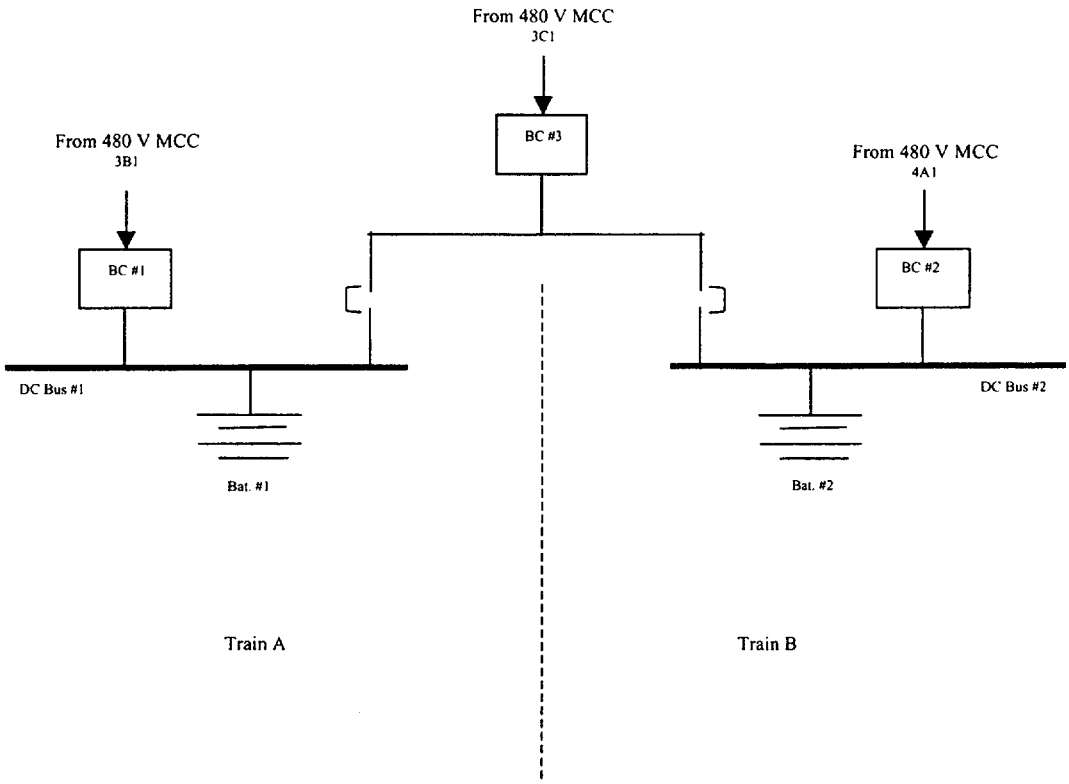

Note: The Fort Calhoun (FCS) naming convention is used in this schematic

Figure 1
Schematic of Class 1E DC Power Configuration for ANO-2, FCS, and MP2

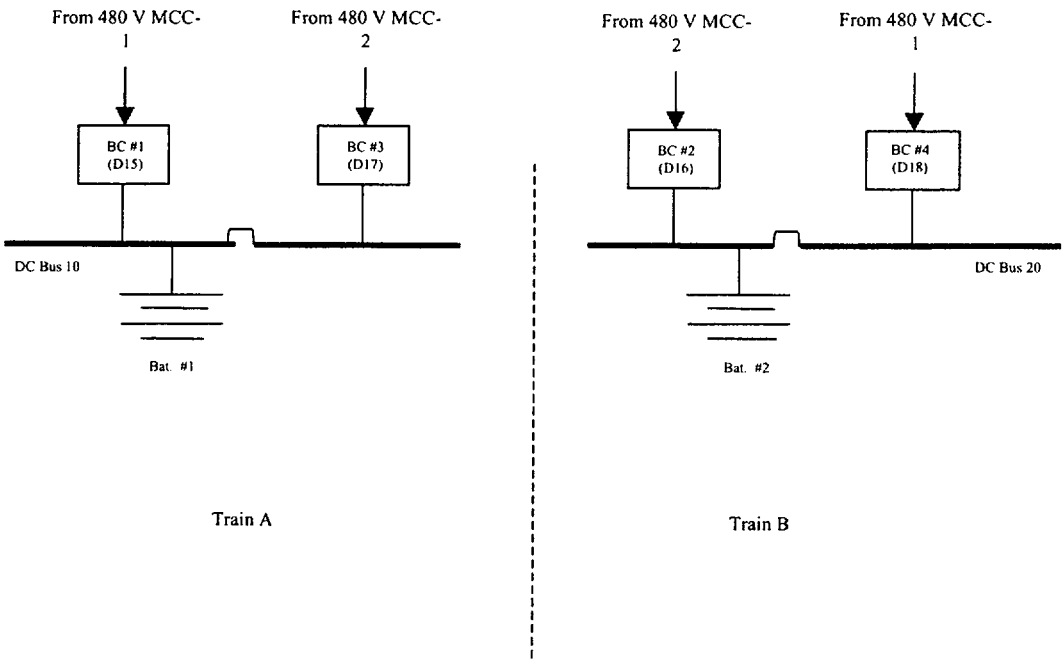

Figure 2
Schematic of Class 1E DC Power Configuration for the Palisades Nuclear Plant

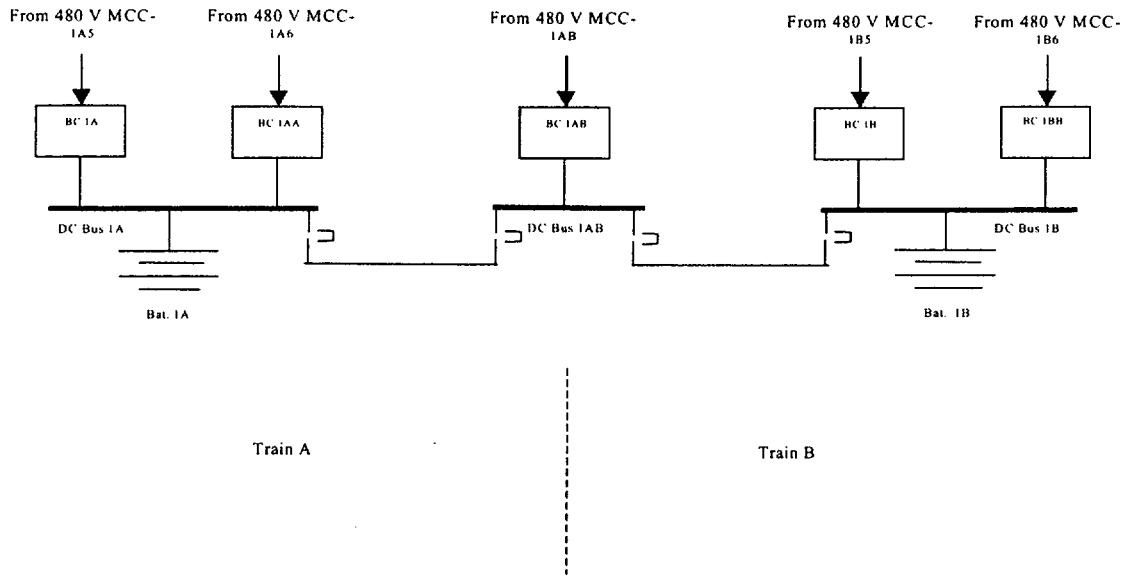

Figure 3A
Schematic of Class 1E DC Power Configuration for SL1

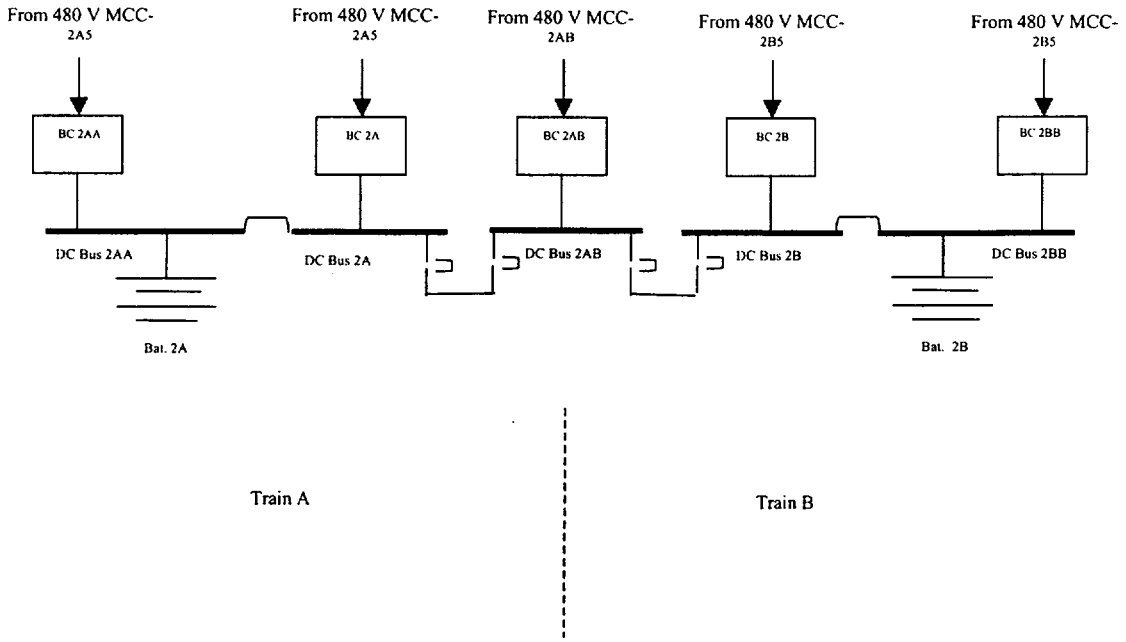

Figure 3B
Schematic of Class 1E DC Power Configuration for SL2

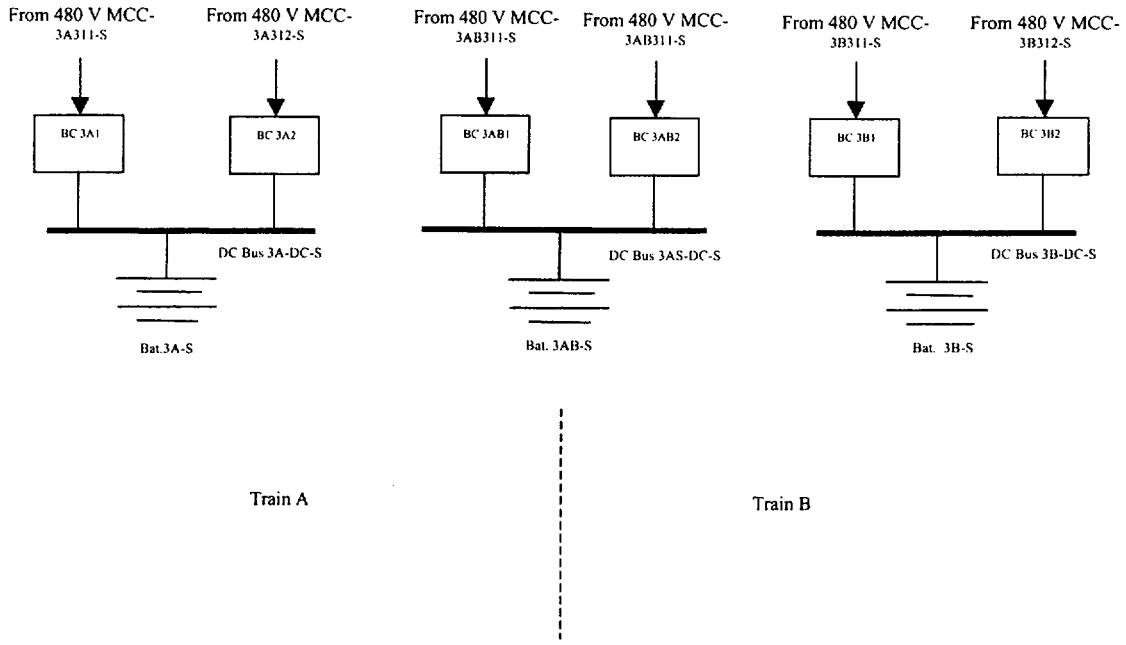

Figure 4
Schematic of Class 1E DC Power Configuration for WSES

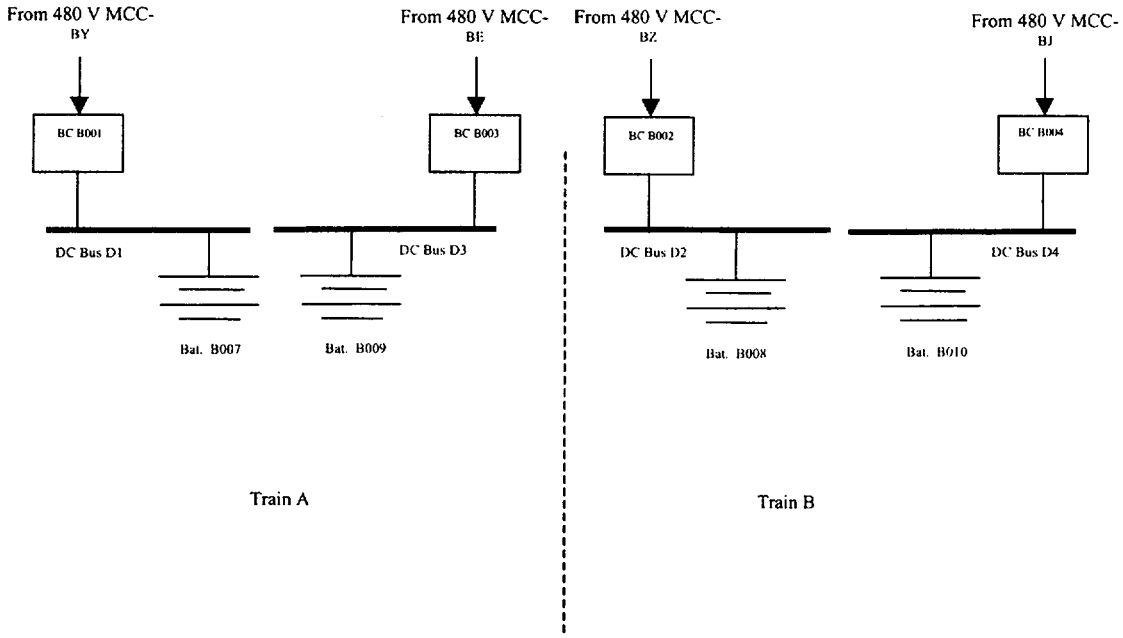

Note: ***A reserve battery charger (not shown) is available for on-line replacement of any of the four battery chargers shown above.***

Figure 5
Schematic of Class 1E DC Power Configuration for SONGS

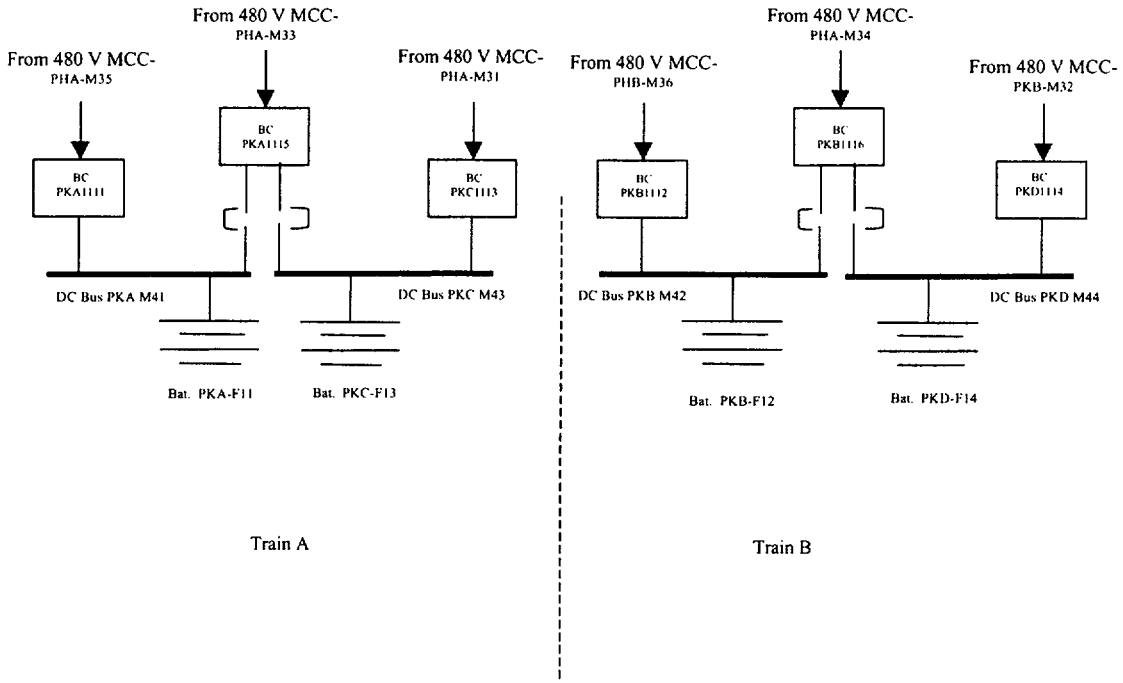

Figure 6
Schematic of Class 1E DC Power Configuration for PVNGS

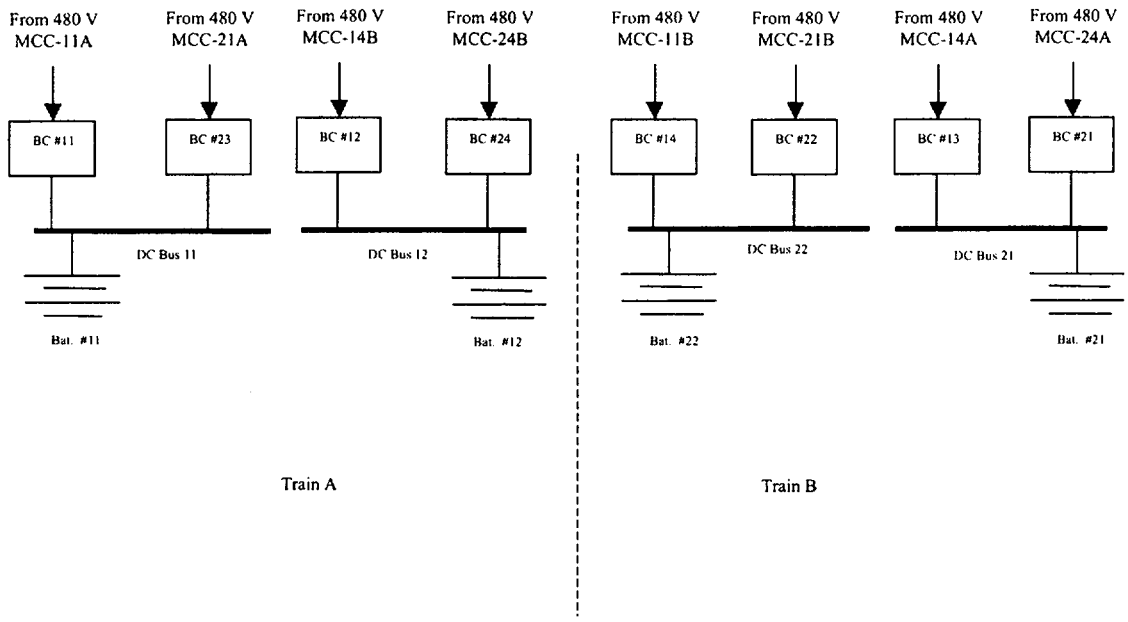

Note: ***A reserve 125 DC battery (not shown) is also available for on-line replacement of any of the four batteries shown above.***

Figure 7
Schematic of Class 1E DC Power Configuration for CCNP

This page intentionally blank.

Attachment 3

DC Electrical Power System Configurations Analyzed for the CE Designed PWRs

Note: For this attachment, the out-of-service equipment is shown with an "X" drawn through it.

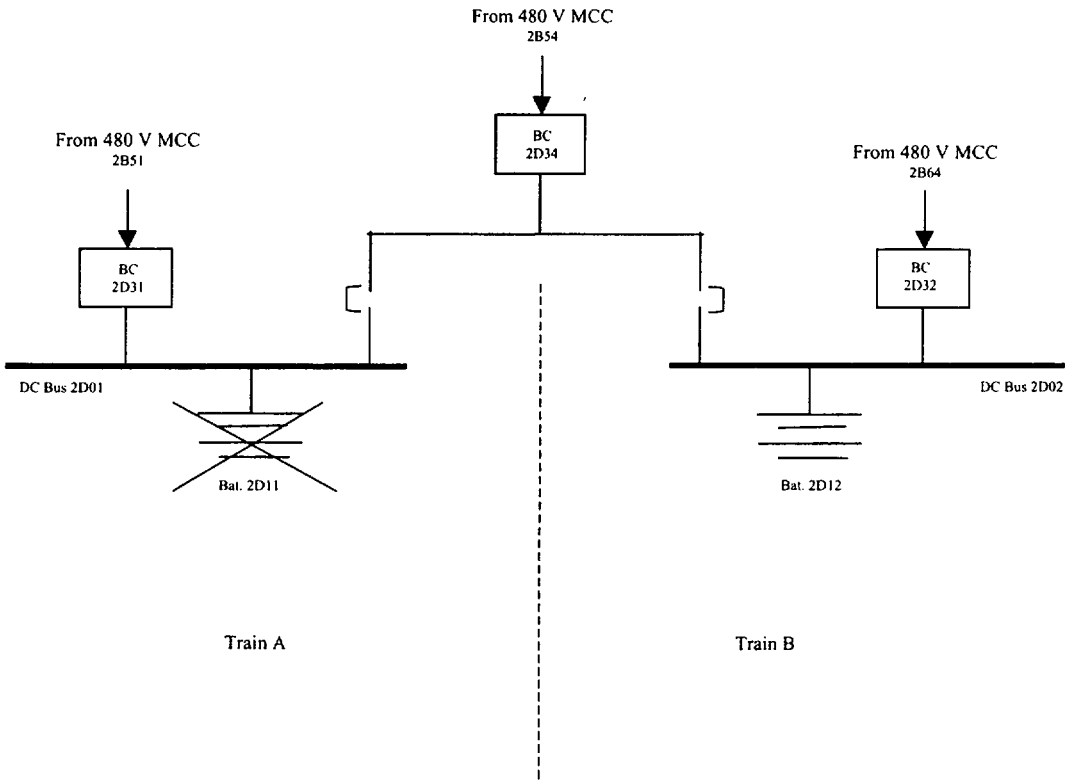

Figure 1
Schematic of Class 1E DC Power System Bounding Configuration Analyzed for Arkansas One Unit 2

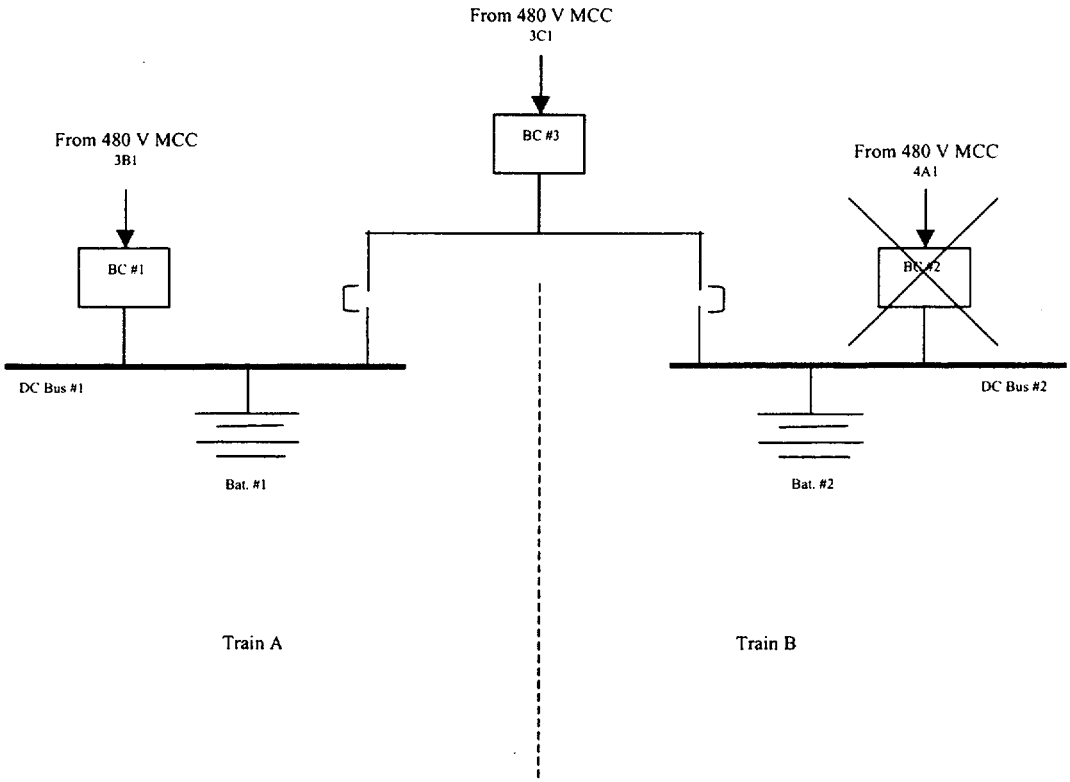

Figure 2
Schematic of Class 1E DC Power System Bounding Configuration Analyzed for Fort Calhoun Station

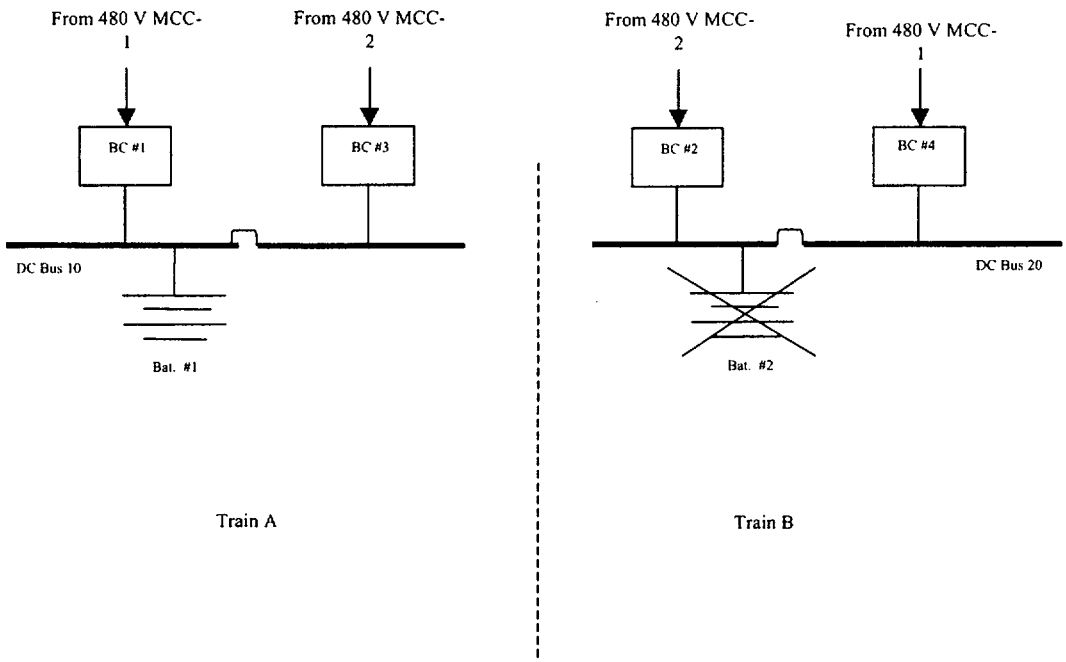

Figure 3
Schematic of Class 1E DC Power System Bounding Configuration Analyzed for Palisades Nuclear Plant

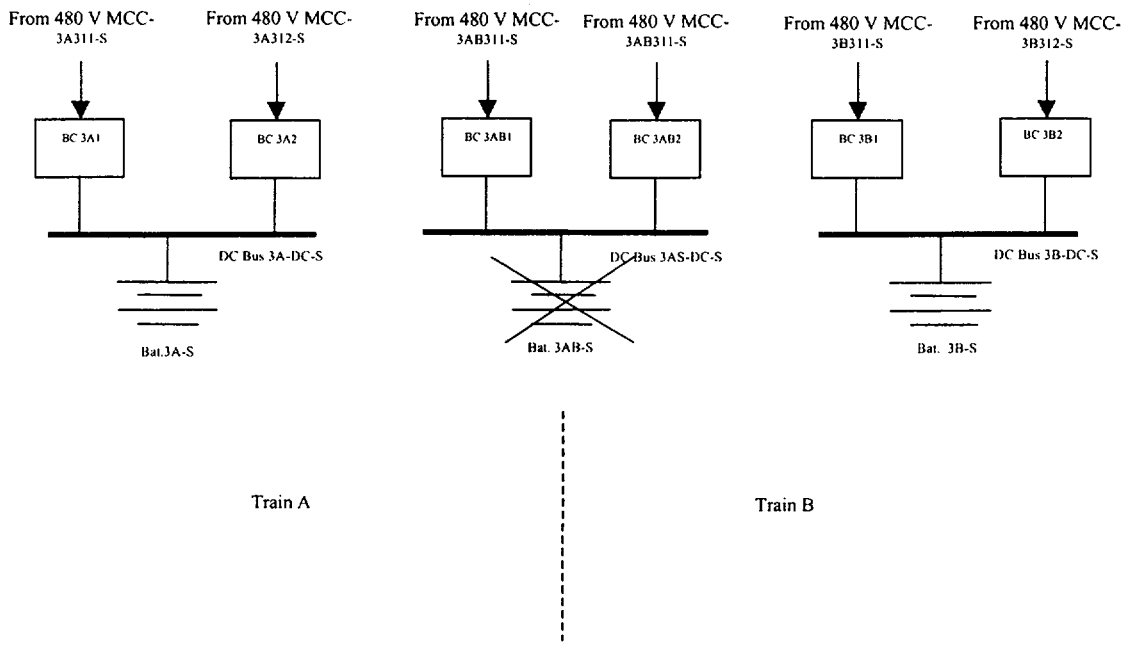

Figure 4
Schematic of Class 1E DC Power System Bounding Configuration Analyzed for Waterford Unit 3

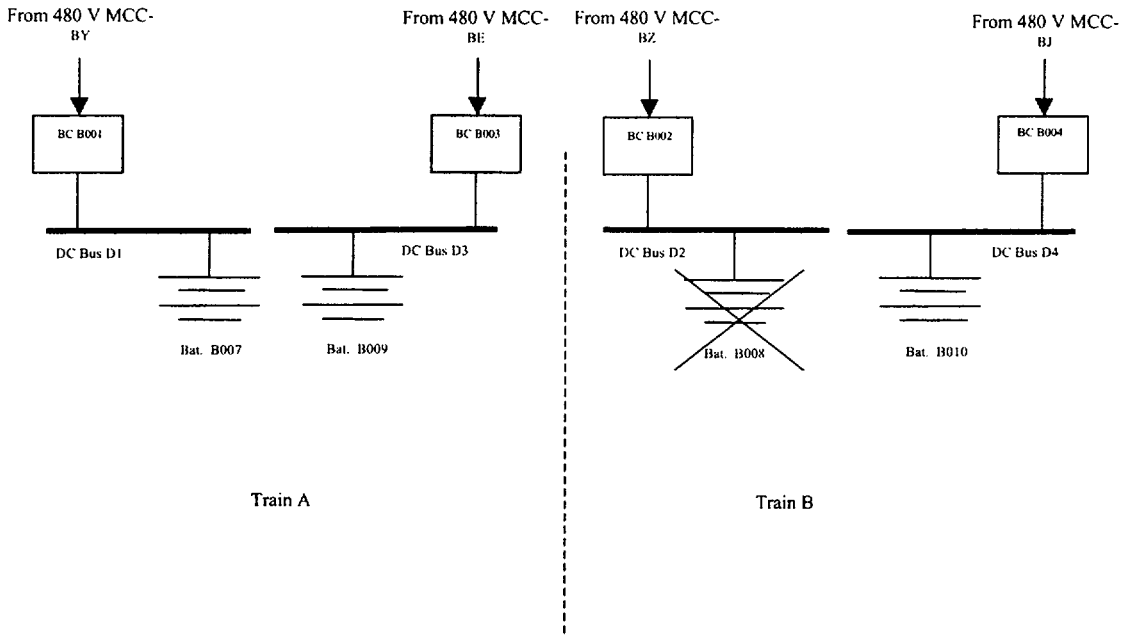

Figure 5
Schematic of Class 1E DC Power System Bounding Configuration Analyzed for San Onofre Units 2 and 3

Attachment 4

Historical Review Information

Contents:

1. **Letter, R. A. Bernier to U.S. NRC, "Response to Information Request concerning CEOG Topical Report CE NPSD-1184, 'Joint Application Report for DC Power AOT Extension,' " CEOG-00-327, dated November 21, 2000**
2. **Letter, R. A. Bernier to U.S. NRC, "Response to Information Request concerning CEOG Topical Report CE NPSD-1184, 'Joint Application Report for DC Power AOT Extension,' " CEOG-01-060, dated February 26, 2001**
3. **Letter, R. A. Bernier to U.S. NRC, "Response to Information Request concerning Topical Report CE NPSD-1184, 'Joint Application Report for DC Power AOT Extension,' " CEOG-01-091, dated April 10, 2001**

This page intentionally blank.

COMBUSTION ENGINEERING OWNERS GROUP

CE Nuclear Power LLC	Baltimore Gas & Electric Calvert Cliffs 1, 2	Entergy Operations, Inc. ANO 2 WSES Unit 3	Korea Electric Power Corp. YGN 3, 4 Ulchin 3,4	Omaha Public Power District Ft. Calhoun
Arizona Public Service Co. Palo Verde 1, 2, 3	Consumers Energy Co. Palisades	Florida Power & Light Co. St. Lucie 1, 2	Northeast Utilities Service Co. Millstone 2	Southern California Edison SONGS 2,3

November 21, 2000
CEOG-00-327

NRC Project 692

U.S. Nuclear Regulatory Commission
Attn: Document Control Desk
Washington, DC 20555-0001

Subject: Response to Information Request concerning CEOG Topical Report CE NPSD-1184, "Joint Application Report for DC Power AOT Extension"

The purpose of this letter is to submit the attached responses to staff questions provided during recent telephone conversations regarding the subject report. This letter documents the responses for use by the staff. Following staff approval, these responses will be incorporated in the approved version of the subject report. Westinghouse and the CEOG utilities are prepared to discuss these responses and will meet with the staff, if necessary, in order to facilitate this review.

Please do not hesitate to call me at 623-393-5882 or Gordon Bischoff, CEOG Project Office, at 860-285-5494 if you have any questions.

Sincerely,

Richard G. Bernier

Richard Bernier
Chairman, CE Owners Group

Attachment: As Stated
cc w/2 copies: J. S. Cushing (OWFN, 4D-7)

cc: G. Bischoff, W
V. Paggen, W
PSA Subcommittee
Licensing Subcommittee
CEOG Library Task 849

Responses to RAIs Regarding CE NPSD-1184: DC Power Source Allowed Outage Time Extension

Based on a September 8, 2000, telephone conversation with the NRC staff, the reviewers of the submitted topical indicated the desire for clarification and elaboration on specific elements of CE NPSD-1184. Fifteen specific items were identified. These questions were divided among generic and plant specific issues. This submittal includes generic responses and those plant specific responses applicable to Waterford Unit 3 and San Onofre Nuclear Generation Units 2 & 3. In addition, a request was made to provide any updated risk information that may have resulted from PSA model improvements since the time of report submittal. The updated information is provided in item 16. The following additional information is provided.

Question 1

In Section 2.0, Scope of Proposed change to Technical Specifications, it is not clear if the DC bus remains energized from either the batteries or the battery charger or if the DC bus is de-energized. Please clarify.

Response 1

The scope of the proposed change to the Technical Specification will be clarified. It is not the intent of this AOT/CT extension to allow plant operation with a de-energized class 1E DC bus. The following statement will be added to the end of the first paragraph in Section 2.0 of Joint Application Report (JAR):

The scope of this effort covers a class 1E 125 VDC bus that remains energized by one of its sources (i.e., battery or battery charger). The AOT/CT extension that is being proposed in this JAR does not apply to conditions where (1) the class 1E battery charger(s) for the affected DC bus are out of service and the charge on the battery is not being maintained, or (2) the DC bus is de-energized and its associated vital 120 V AC bus is also de-energized.

The conditions for the proposed battery/battery charger AOT/CT extension are shown below.

	Battery Inoperable	*Battery Operable*
One Required Full Capacity Charger Operable	*[24] Hours*	*Not an LCO Action*
1 out of 1 or 2 out of 2 Class 1E Battery Charger(s) Inoperable	*[2] Hours – no change requested*	*[24] Hours if Charge on the Battery is Otherwise Maintained* *[2] Hours if Charge on the Battery is not Maintained*

Bracketed values to be based on condition specific analyses. Waterford Unit 3 and San Onofre Units 2 & 3 evaluations support the indicated 24 hours.

Mark-ups to the Technical Specification for Waterford Unit 3 and San Onofre Units 2 and 3 will be provided at the time of plant-specific submittal. Changes to San Onofre Units 2 and 3 TS 3.8.9 for Distribution Systems-Operating will be made for consistency. Similarly, changes to Waterford Unit 3 TS 3.8.3 for Onsite Power Distribution Systems Operating will also be made for consistency.

Question 2a

Section 6.2 includes the following statement: "The following provides a deterministic assessment of unavailability of a battery/charger when the available DC electrical power sources are one less than the LCO. Such a system would be considered fully functional, however, a subsequent single failure could render the entire DC electrical power system ineffective on a turbine generator trip."

Explain what is meant by "such a system would be considered fully functional." It is our understanding that when DC electrical power sources are one less than the LCO, one division or train of ESF buses would also be rendered inoperable. The ESF buses would not have available onsite AC power sources and may (or may not depending on their fast transfer design) have offsite sources available on a turbine generator trip. Also, designs without fast transfer would have some probability of not having offsite power available to the ESF bus on turbine generator trip due to possible instability of the offsite power source following turbine trip. When one ESF train is inoperable, it is not clear how the DC system would be considered fully functional. Provide clarification.

Response 2a

The statement, "such a system would be considered fully functional," in Section 6.2 of the JAR will be clarified as follows:

"The following provides a deterministic assessment of unavailability of a battery or battery charger when the available class 1E DC electrical power sources are one less than the LCO. For a plant configuration where a battery or its associated battery charger is out of service, the unaffected division of class 1E DC power would still remain fully functional."

The context of the question deals with the availability of ESF buses and associated equipment for CE designed PWRs with and without fast transfer capability following a turbine generator trip. The context of question 3 also deals with the ESF bus unavailability following a turbine generator trip. The following describes the impact of taking one of the DC power sources out of service for plants with fast transfer capability. A similar description is provided for plants without fast transfer capability in response to question 3.

Plants with Fast Transfer Capability

Generally, the removal of a battery from service at a CE designed plant with fast transfer capability will leave the associated battery charger(s) as the remaining source of power for the affected class 1E DC bus. A turbine generator trip from this plant configuration for the case where offsite power is available will cause the associated battery charger to lose its AC power source and consequently cause a loss of power to the affected class 1E DC bus. Since the fast transfer breakers rely on class 1E DC power, the transfer of power to the offsite AC source in the affected division will not occur. Consequently, the associated ESF buses in the affected division will lose their source of offsite AC power. The affected onsite AC power source (i.e., EDG) will also be lost because DC power is required for starting the EDGs. Because the offsite and onsite power sources to the ESF buses are lost, all associated equipment in the affected division

will be inoperable. However, both the offsite and onsite AC power sources to ESF buses in the unaffected division will be available and ESF equipment in the unaffected division will remain operable. ***[Although Waterford Unit 3 has fast transfer capability, the fast bus transfer from the Unit Auxiliary Transformer to offsite power is not dependent on the class 1E DC power system. The switchyard breakers are also not dependent on the class 1E DC system. DC control power for all these breakers (fast transfer and switchyard) is provided by the non-1E DC power systems. Therefore with the removal of a battery from service, fast transfer would occur and the chargers would regain supply and the DC bus would remain energized. Hence, both the onsite and offsite AC power sources to ESF buses in both divisions would be available.]***

For the case similar to above with the exception that offsite power is also lost following a turbine generator trip, the impact is the same as above for ESF equipment in the division where the battery is taken out of service. The remaining division of ESF equipment will have only the onsite AC power source available.

The removal of a battery charger from service at a CE designed plant with fast transfer capability will leave the battery and a redundant or backup battery charger as the sources of power to the affected class 1E DC bus. A turbine generator trip from this plant configuration for the case where offsite power is available will not cause the associated class 1E DC bus to lose power. The charge on the battery will be maintained when an associated battery charger is taken out of service. Therefore class 1E DC power will be available in the affected division for fast transferring the appropriate breakers to the offsite AC power source. For this case, both the offsite and onsite AC power sources to ESF buses will be available and ESF equipment in both divisions will be available.

For the case where a battery charger is taken out of service at a CE designed plant with fast transfer capability and offsite power is lost following a turbine generator trip, class 1E DC power will be available in the affected division. However, fast transfer will not occur because offsite power is lost. For this case, only the onsite AC power source to the ESF buses in either division will be available. With the availability of onsite AC power in both divisions the ESF equipment in both divisions will also be available.

Whether or not the equipment (battery or battery charger) is taken out of service, there is always a probability of losing offsite power to the ESF buses due to instability in the offsite power source following a turbine generator trip.

See additional clarification provided in response to Question 3a below.

Question 2b

It is not clear why a subsequent single failure would only render the entire DC electrical power system ineffective on a turbine generator trip. It appears that a lot more than just the DC system would fail. A single failure of an AC system load energized from its AC power source without DC control power to actuate protective relaying to remove power from the failed equipment (1) would cause the entire unrecoverable loss of one ESF train and loss of offsite power to both ESF trains (maybe recoverable to the remaining ESF train) and (2) may, as a consequence of the unrecoverable loss of the one ESF train, cause the loss of the redundant ESF train. Provide clarification.

Response 2b

A single failure of an energized AC load without class 1E DC control power to isolate the AC load from its power source would result in the loss of the associated train of ESF equipment. With the inability to isolate the faulty equipment, the AC circuit that provides power from the switchyard would trip and prevent a consequential loss of offsite power to the switchyard. Thus, the plant is designed such that loss of one ESF train and loss of offsite power to both ESF trains will not occur. The AC circuits from the switchyard that provide onsite AC power to ESF equipment are also equipped with protective relays and control power for switchyard breakers is provided by the switchyard DC system. Multiple redundant switchyard breakers are available to isolate a faulty AC circuit from the switchyard. ***The switchyard DC system is independent and separate from the class 1E DC system.*** *Because the switchyard and class 1E DC systems are separate and independent, the switchyard DC system will trip the associated switchyard breakers and prevent the consequential loss of equipment in both ESF trains.*

As discussed above, loss of a class 1E DC train will render the associated ESF equipment in the affected train unavailable or inoperable. This condition is modeled in the PSAs for all CE designed PWRs by including the potential loss of the appropriate class 1E DC bus as one of the ways the affected ESF equipment can become unavailable or inoperable.

Question 2c

Describe how risk was considered for the single failure of an AC load described in 2b above.

Response 2c

Waterford Unit 3 is included in the category of CE designed PWRs with fast transfer capability. At Waterford Unit 3, the ability to isolate a faulty AC load was not explicitly included in the PSA model because of the low probability of such an event when class 1E DC power is available. Without class 1E DC power, the ability to isolate a faulty AC load becomes more significant. This risk impact was estimated by requantifying the PSA model given that a class 1E DC bus is lost. The risk impact of this plant configuration conservatively assumed (1) a coincident loss of a class 1E DC bus for all initiating events included in the PSA model, and (2) the resulting failure of all equipment that rely on DC power from the affected class 1E DC bus. The resulting conditional core damage frequency was calculated to be 8.6E-05 per year. The corresponding incremental conditional core damage probability (ICCDP) for a 24-hour AOT duration was calculated to be 2.05E-07. The above calculation represents a very conservative estimation. It inherently assumed that the conditional failure probability of a class 1E DC bus given the occurrence of a transient event is unity and the full 24-hour AOT accumulates. In reality, the conditional probability of a faulty AC circuit is much less than unity. Furthermore, the expected AOT duration would be less than 24 hours.

Question 2d

When the single failure described in 2b above is considered, does the following statement located in the first paragraph of section 6.2 remain valid? Provide clarification. Explain why the impact of component (battery/charger) unavailability would continue to be considered greater for plants with lesser levels of component redundancy. "[Note that PVNGS 1, 2 & 3, SONGS 2&3 and WSES-3 have additional battery/charger redundancies that make them more robust to a Loss of Offsite Power (LOP) event.]"

Response 2d

The clarified statement in Section 6.2 would still be valid.

In general, the CE designed PWRs with four class 1E DC buses distribute the DC loads among four class 1E DC buses. The unavailability of a single bus would not necessarily render all DC dependent equipment and indications within the affected division inoperable. For the CE designed PWRs with two class 1E DC buses, failure of a single class 1E DC bus would render all DC dependent equipment and indications within the affected division inoperable. Although Waterford Unit 3 has three class 1E DC buses, the DC load distribution is more in line with CE designed PWRs with two class 1E DC buses.

Each of the class 1E DC buses at Waterford Unit 3 is equipped with one battery and two associated battery chargers. Any one of the battery chargers can supply normal operational loads. The AB train of battery chargers can also each supply all accident loads. The A and B trains of battery chargers can each supply accident loads, unless the worst loads are conservatively assumed to occur simultaneously. This redundancy creates less impact for each bus when one item on the bus is taken out of service. With a single failure of a battery charger after the associated battery is taken out of service, the remaining battery charger is in service to provide the necessary DC supply to isolate any AC fault condition.

Question 3a

Section 6.2 of the first paragraph under the heading "Internal Event Considerations" includes the following statement: "For the other CE plant designs, the ESF busses are powered from the switchyard (offsite loads) during normal power operation and hence are not impacted during a normal reactor trip."

It is not clear what is meant by the statement "...ESF buses.....are not impacted during a normal reactor trip." When the CE design does not have a fast transfer bus capability, the ESF buses may not be impacted with a loss of offsite power due to a normal reactor trip; however, they are impacted during a normal reactor trip in that (1) they will see voltage transient conditions on the offsite system during the reactor trip, (2) they have a probability for losing their offsite source due to loss of power to the offsite system from the turbine generator, (3) without DC power, the ESF buses and safety system loads may continue to be energized with AC power from the offsite source but without DC control power to open circuit protective devices thus creating additional consequences if there were a circuit fault in the AC system, (4) without DC power, there would be no control power thus ESF loads would not start, (5) without DC power there is an increased probability that the reactor may not trip if there is a turbine trip or need for reactor trip, and (6) without DC power, there is an increased probability for reactor trip without ESF systems available. Provide clarification.

Response 3a

The statement of concern in Section 6.2 of the JAR under "Internal Event Considerations" will be clarified as follows:

"For the other CE plant design, the ESF buses are powered from the switchyard during normal power operation and are not subject to fast transfer following a turbine generator trip."

The above items are accounted for in the PSA models with the exception of items 5 and 6. Item 6 is addressed in response to questions 6, 7, and 8. With respect to item 5 for CE designed PWRs, class 1E DC power is not required for tripping the reactor trip breakers. Loss of class 1E DC power removes the spring tension used to keep the reactor trip breaker in the closed position. The following describes the impact of taking one of the DC power sources out of service for plants without fast transfer capability.

Plants without Fast Transfer Capability

San Onofre Units 2 and 3 are included in the category of CE designed PWRs without fast transfer capability. The removal of a battery from service during normal operation at a CE designed plant without fast transfer capability will leave the associated battery charger as the remaining source of power for the affected class 1E DC bus. Given a turbine generator trip from this plant configuration for the case where offsite power is available, class 1E DC power from the associated bus may or may not be available. The availability of DC power at the associated bus will depend on the capability of the charger to handle the transient loading requirements. The charger may not be capable of handling the transient loading requirements for all initiating events considered in the PRA. Conservatively assuming that the charger will not handle the loading requirements, the charger will also trip off line following a turbine generator trip. Consequently, the associated DC bus will lose power. Loss of a DC bus will render the associated same train onsite AC power source unavailable. Although offsite AC power for ESF equipment in the affected division is still available, loss of a DC bus will render the breakers for these equipment inoperable. The affected equipment will not start when demanded or if operating prior to turbine generator trip will be incapable of isolating the equipment from its AC source if a fault occurs. Upstream circuit breakers in the switchyard, which are powered from an independent non-1E DC power system, will then trip the affected buses in the affected division. In the limiting case, ESF equipment in the affected division will become unavailable. However, the ESF equipment in the redundant division will be available.

For the case similar to above with the exception that offsite power is lost following a turbine generator trip, the associated charger will also lose its AC power source and consequently power from the affected DC bus will be lost. Because the EDG relies on class 1E DC power to start, the onsite AC power in the affected division will also be lost. Consequently for this case, the ESF equipment in the affected division will be unavailable. However, the ESF equipment in the redundant division will be available.

Generally, the removal of a battery charger from service during normal plant operation at a CE designed plant without fast transfer capability will leave the battery and redundant or standby a battery charger as the sources of power for the affected class 1E DC bus. Given a turbine generator trip from this plant configuration, class 1E DC power from the associated bus will still be available and the charge on the battery will be maintained. With the availability of DC power, the onsite AC power source will also be available. Hence, both sources of AC power (offsite and onsite) for the ESF buses in the affected division will be available. ESF equipment in both divisions will therefore be available.

For the case similar to above with the exception that offsite power is lost following a turbine generator trip, the battery charger will also lose its AC power source and the battery will be the source of power for the associated class 1E DC bus. However, once the EDG starts AC power will be restored to the battery charger. For this case, only the onsite AC power source will be available for the ESF buses in both divisions.

Question 3b

How is risk addressed for each of the items listed in 3a above and what is it?

Response 3b

At San Onofre Units 2 and 3, the risk from the proposed DC bus AOT is very low. This is because SCE does not plan to change practices associated with entering a class 1E DC bus action statement, with the exception that the extended AOT would permit additional battery cell jumpering and replacement evolutions that may not be possible within the current 2-hour AOT. Since loss of voltage on a class 1E

DC bus would result in a plant trip, the operators would never voluntarily remove a class 1E DC bus from service during power operation. Furthermore, a class 1E DC bus would never be supplied solely from a battery charger during a planned maintenance evolution. During an unplanned maintenance evolution due to a charger failure, a spare safety-related charger powered from a non-safety related source would be connected within 2 hours based on existing procedures to ensure continued battery capacity. This charger would be repowered from a safety-related bus within 30 minutes per existing procedures in the event of a loss of offsite power. During an unplanned maintenance evolution due to a battery inoperability, the battery would remain functional, but degraded, while bad cells are jumpered out of service and spare cells are jumpered into service. At no time during planned battery maintenance would the class 1E DC bus be disconnected from a battery bank. The vulnerability during battery maintenance is that the battery capacity may not be adequate to meet the 4-hour station blackout coping assumption. However, the likelihood of a station blackout event lasting more than one hour is very small at SONGS (less than 1E-4 per year) with the recently installed diesel generator cross-tie capability that permits any one of four station emergency diesel generators to safely shutdown both San Onofre units.

Question 3c

From a nuclear plant operational perspective, explain how risk will be utilized such that the planned removal of DC control power from safety related DC system buses would be authorized for a 8 or 24 hour LCO time period during power operation.

Response 3c

The removal of DC control power from a safety related DC system bus causing it to be de-energized is not within the scope of the JAR, as clarified in response to Question 1. For this condition, the current 2 hour AOT/CT would still remain in effect. The JAR covers the removal of one of the power sources to the associated class 1E DC bus.

The removal of a class 1E DC power source from service during normal power operation is expected to be an infrequent event. The Configuration Risk Management Program (CRMP) associated with the plant's Maintenance Rule Program will be used to manage the risk associated with the removal of a DC power source from service for the proposed AOT. The plant's Maintenance Rule Program will ensure that performance of concurrent on-line activities that will significantly impact the overall plant risk will not occur while a DC power source is out of service.

Question 3d

Define the compensatory measures that will be imposed during the 8 or 24 LCO when the inoperability of the DC system is (1) planned and (2) unplanned. Describe how risk is affected by implementation of compensatory measures.

Response 3d

The compensatory measures will be considered prior to a planned entry into this LCO. These compensatory measures can include the following: (1) Ensure that the DC power system for the switchyard circuit breakers is operable, (2) Prohibit maintenance activities on switchyard circuit breakers for the offsite AC power circuit associated with the division where the DC power source is taken out of service, (3) Prohibit maintenance activities on protective relays in the switchyard, (4) Minimize activities that are precursors for bus faults, (5) Preclude on-line activities for all redundant ESF equipment in the unaffected division, and (6) Ensure the charger(s) is operating properly. The specific actions to be taken will depend on many factors including the complexity and duration of the repair and the extent of concurrent on-line maintenance. These actions will be consistent with the plant's Maintenance Rule A4 Program. [Also, see response to question 3b.]

Question 4a

The following statement is included in the second paragraph under the heading "Internal Event Considerations" of section 6.2:

"Failure of the respective AFW pump, without timely recovery of offsite power would result in core damage."

From this statement, it is not clear how or if recovery of offsite power is utilized as part of the risk calculation. Provide clarification.

Response 4a

Non-recovery probabilities for loss of offsite power and station blackout scenarios have been developed and utilized in the risk calculations. These probabilities are based on industry operating experiences that reflect the causes of losing offsite power. The recovery of offsite power is assessed on a sequence by sequence or case by case basis to account for the cause of losing offsite power and/or the time available for restoring offsite AC power.

Question 4b

If credit for recovery of offsite was utilized in the risk calculation, explain how offsite power (when recovered) is to be utilized to provide motive power to components needed to prevent core damage.

Response 4b

Once offsite AC power is recovered, plant equipment not previously failed is assumed available (in a probabilistic sense) to help in event mitigation. Typically for these scenarios, the available motor-driven EFW (or AFW) pumps may be started and the turbine-driven EFW (or AFW) pump (if available) will now have DC control power to function. Therefore, when offsite AC power is recovered within the allowable time frame, core damage is averted since the EFW (or AFW) system will restore the lost heat removal capability to the steam generators.

Question 5a

The third paragraph under the heading "Internal Event Considerations" of section 6.2, states the following:

"Turbine-driven pump at the plant may be available and would function, so long as the steam generators are not overfilled. However, all AFW control is performed "blind," that is without available instrumentation (only after both batteries fail will all instrumentation be lost). This potential is mitigated in some CE designed PWRs by either increased redundancy in DC systems or additional plant features that make them more robust to a LOP event. For example, SL-1&2 can cross-tie their units to power a bus from an EDG of the other unit. PVNGS 1, 2, &3 has on site AAC capability as do MP-2, CC-1&2, and ANO-2. FCS uses a diesel-driven auxiliary feedwater pump that is independent of station DC power."

Without DC control power, describe how each of the following will be utilized. The cross-tie capability, the AAC, and the diesel-driven auxiliary feedwater pump.

Response 5a

San Onofre Units 2 and 3 has the capability to manually cross-connect one unit's emergency diesel generator (EDG) class 1E bus to the same train of the other unit's EDG class 1E bus. A cross-tie breaker is associated with each of the 4.16 Kv class 1E buses. Both cross-tie breakers must be manually closed to establish cross-tie capability between the same EDG train of both units. The respective class 1E DC bus provides control power for each cross-tie breaker. Consequently, the loss of control power to either cross-tie breaker will prevent cross-tying the units. Plant-specific features including AAC and diesel-driven auxiliary feedwater pump are not available at San Onofre Units 2 and 3 and Waterford Unit 3.

Question 5b

Explain how cross-tie, AAC, and the diesel-driven auxiliary feedwater pump capability were utilized to determine risk in plants with these features.

Response 5b

At San Onofre Units 2 and 3, the dependence of the cross-tie breakers on class 1E DC power is included in the PSA model. Loss of class 1E DC control power for either cross-tie breaker would prevent the affected breaker from being closed from the control room. However, manual closure of these breakers can be accomplished. Thus, the cross-tie capability at San Onofre Units 2 and 3 was available and credited in determining plant risk for the case where 125 VDC control power to the cross-tie break is lost. [Also, see response to question 13.]

Question 5c

Without DC control power, explain how the turbine-driven pump at the plant can be utilized.

Response 5c

At San Onofre Units 2 and 3 the turbine-driven AFW pump can be operated manually without class 1E 125 VDC control power. To accomplish this action, the operator is procedurally instructed to first disconnect DC power source. The turbine stop valve is then closed. After closing the valve the operator is instructed to slowly open the turbine stop valve 1 to 12 turns to allow steam to slowly accelerate the pump's turbine. The operator is then instructed to open the stop valve further until discharge pressure reaches 1350 psi (as measured at the pump's discharge pressure gauge). Steam generator level indication is provided by any one of the remaining three redundant level indicators, each of which are powered from separate class 1E DC sources. Therefore, loss of a class 1E DC bus would not cause DC control power to be unavailable for both the turbine-driven AFW pump and steam generator level indications. Overfilling of the steam generator will result in failure of the turbine-driven AFW pump. It should be noted that the CE designed PWR with diesel-driven pump (i.e., Fort Calhoun) will not experience failure of steam generator heat removal due to overfilling of the steam generators.

At Waterford Unit 3, the turbine-driven EFW pump can also be operated to deliver makeup to the steam generators by manually throttling the steam supply valves and pump discharge valves, and monitoring line pressures through manual gauges. Waterford does not currently credit this recovery action in the PSA model. After the battery is depleted, the turbine-driven EFW pump is modeled as failed.

Question 6

On page 39, it is indicated that generic failure data for the battery chargers was used in the assessment. Describe to what extent this generic failure data relates to the failure rate of a

battery charger that is being used in a non-generic configuration (i.e., the battery charger is connected to a load group containing continuous and transient loads without a battery connected to supply transient loads). Provide justification for the failure rate used in the assessment.

Response 6

The current AOT for the inoperability of a class 1E DC battery is two hours. Because of the short duration, the plant is currently not operated long enough in a configuration where only the charger(s) provides power to associated DC bus to provide meaningful failure data for the charger(s). A generic or plant-specific failure rate of a battery charger was used in the assessment. No significant increase in the generic failure rate of a battery charger is expected when the battery charger is the only source of power for the class 1E DC bus. The battery charger has sufficient capacity to supply the "normal" DC loads and maintain the battery in a charged state during power operation. Without meaningful operating data for the battery charger in this configuration, a sensitivity evaluation was performed to assess the risk impact of operating with only the battery charger(s) as the source of power to the class 1E DC bus.

Equation 6-4 of the JAR was used in the sensitivity evaluation. In this expression, the plant-specific conditional core damage probability due to loss of a DC bus ($CCDP_{LODC}$) was used and the battery charger failure rate was varied. The battery charger failure rate included independent and common cause faults (as appropriate). The failure rates used in the PSAs were increased by a factor of 2, 5, and 10 for the sensitivity evaluation. The Beta-factor, which represents the conditional probability of the second battery charger failing given that the first charger has also failed, was also increased by a factor of 2, 5, and 10 for the sensitivity evaluation. The base (case) failure rate of a battery charger is 1.35E-5 per hour for Waterford Unit 3 and 6.00E-7 per hour for San Onofre Units 2 and 3. The base (case) conditional failure probability is assumed to be 1.26E-2 for both Waterford Unit 3 and San Onofre Units 2 and 3. The results of the sensitivity evaluation for San Onofre Units 2 and 3 and Waterford Unit 3 are summarized below.

Table 6-2A
Impact of Charger Failure Rates on Core Damage Probability

Plant	Case Description	λ [per hour]	β	λ_C [per hour]	Proposed AOT [hours]	$CCDP_{LODC}$	$ICCDP_{BATT}$
WSES	1) Base values for λ and β	1.35E-05	1.26E-02	1.70E-07	24	8.55E-05	3.49E-10
	2) Base λ and 2xβ	1.35E-05	2.52E-02	3.40E-07			6.98E-10
	3) Base λ and 5xβ	1.35E-05	6.30E-02	8.51E-07			1.75E-09
	4) Base λ and 10xβ	1.35E-05	1.26E-01	1.70E-06			3.49E-09
	5) 2xλ and 10xβ	2.70E-05	1.26E-01	3.40E-06			6.98E-09
	6) 5xλ and 10xβ	6.75E-05	1.26E-01	8.51E-06			1.75E-08
	7) 10xλ and 10xβ	1.35E-04	1.26E-01	1.70E-05			3.49E-08
SONGS	1) Base values for λ and β	6.00E-07	1.26E-02	7.56E-09	24	1.46E-04	2.65E-11
	2) Base λ and 2xβ	6.00E-07	2.52E-02	1.51E-08			5.30E-11
	3) Base λ and 5xβ	6.00E-07	6.30E-02	3.78E-08			1.32E-10
	4) Base λ and 10xβ	6.00E-07	1.26E-01	7.56E-08			2.65E-10
	5) 2xλ and 10xβ	1.20E-06	1.26E-01	1.51E-07			5.30E-10
	6) 5xλ and 10xβ	3.00E-06	1.26E-01	3.78E-07			1.32E-09
	7) 10xλ and 10xβ	6.00E-06	1.26E-01	7.56E-07			2.65E-09
	8) Base value for λ	6.00E-07	-	6.00E-07	24	1.46E-04	2.10E-09
	9) 2xλ	1.20E-06	-	1.20E-06			4.20E-09
	10) 5xλ	3.00E-06	-	3.00E-06			1.05E-08
	11) 10xλ	6.00E-06	-	6.00E-06			2.10E-08

In the above table λ is the independent failure rate of a battery charger and β is the conditional probability that the second battery charger fails given that the first battery charger has also failed. All other parameters listed in the table are defined in Equation 6-4 of the JAR. For San Onofre Units 2 and 3, each of the class 1E DC buses is equipped with a single class 1E battery charger. However, the capability exists for connecting a non-1E battery charger to the bus. Therefore, two cases were evaluated for San Onofre Units 2 and 3. The first case represents a configuration where two battery chargers are connected to the bus when the associated battery is taken out of service. The second case represents a configuration where only a single battery charger is connected to the bus when the associated battery is taken out of service. Since two battery chargers are always connected to each of the class 1E DC buses at Waterford Unit 3, only a single case was evaluated. For the plant configurations where two battery chargers are connected to the class 1E DC bus, the overall failure rate of a battery charger is dominated by common cause failure. Multiple independent failures of the battery chargers are an insignificant contributor to the overall failure rate. Hence, the overall failure for a two-battery charger configuration is estimated as the product of the independent failure rate, λ, and the Beta-factor, β. For a single-battery charger configuration, the overall failure rate, λ_C, is the same as the independent failure rate.

In performing the sensitivity evaluation, the independent failure rate of a battery charger and the

conditional probability that the second battery charger will fail given that the first has failed were increased by as much as an order of magnitude. The results of the sensitivity evaluation show that by increasing both the independent failure rate of a battery charger and the conditional failure probability by an order of magnitude the incremental contribution to CCDP for the proposed 24 hour AOT duration would be less than 5.0E-08.

Question 7

In regard to the overall failure rate of two battery chargers providing power to same DC bus without a battery, describe how common cause failure of both chargers given the failure of one was considered.

Response 7

In the JAR, the Beta Factor approach was used to model common cause failure of both battery chargers associated with a class 1E DC bus. For this model, there is a conditional probability that the second battery charger will fail given the failure of one battery charger. A generic value, which is based on the normal plant configuration, was used for the conditional failure probability in the JAR. With the battery chargers as the only source of power to the affected class 1E DC bus, the conditional failure probability (or beta factor) may increase. Since there is not sufficient operating experience with the battery chargers operating in this plant configuration, the sensitivity evaluation performed in response to Question 6 also included a variation in the conditional failure probability. At Waterford Unit 3, common cause failure of the battery chargers is currently not included in the PSA model, but will be included in a later update of the PSA model. See the sensitivity results provided in response to Question 6.

Question 8

With the battery charger as the only source of power to the DC bus (i.e., the battery is inoperable), describe how the consequence of failure of the battery charger (such as potential for plant trip) was considered in the risk assessment.

Response 8

With the battery inoperable, failure of the battery charger(s), which is the only source of power for the affected class 1E DC bus during the proposed AOT, would cause an increase in the frequency of losing the affected DC bus. This increase in loss of DC bus frequency needs to be accounted for in assessing the risk associated with the proposed AOT. The effect of having a battery out of service was not considered in the Loss of DC Bus Initiator for the plant specific CCDFs. Since failure of the battery charger(s) is the dominant contributor to loss of the associated class 1E DC bus given that the battery is out of service, Equation (6-4) of the JAR is used to estimate the risk impact. Refer to the results shown in response to Question 6.

With the battery out of service at Waterford Unit 3, both battery chargers provide power to the associated class 1E DC bus. Failure of either battery charger will not result in loss of the DC bus or cause a plant transient. Simultaneous failure of both battery chargers would be necessary to lose power to the affected DC bus and potentially cause a plant transient. Failure of both battery chargers may be caused by independent failures of both battery chargers or by a common event affecting both battery chargers. Since the independent failure of a battery charger is a low probability event, the overall failure rate of both battery chargers is dominated by common cause failure (not currently modeled). The battery and associated battery chargers are linked into "no power at DC bus" gates in the PSA model. These gates not only feed into the potential equipment the DC bus could fail (e.g., HPSI pump), but also into some

systems that can initiate a transient (e.g., Pressurizer pressure control and loss of feedwater). Also, refer to response provided for Question 6.

With a battery out of service at San Onofre Units 2 and 3, a single battery charger provides power to the associated class 1E DC bus. Failure of the battery charger will cause loss of a class 1E DC bus and plant transient.

Question 9

Plant: ANO, Waterford, and Palisades
LCO: Battery Out of Service

Is the capacity of the charger (or combined chargers, if applicable) large enough to provide enough energy to satisfy the loading requirements for every PRA defined IE? If the answer is yes, please provide the basis for your response and specify whether you are crediting any load shedding or set point adjustments. Please specify whether the PRA results provided in the JAR reflect the assumptions you are making.

Response 9

At Waterford Unit 3, an evaluation was performed by the Design –Electrical group to review the peak DC loads conservatively assuming all ESF actuations occur, and that they occur simultaneously (T = 0.0). This evaluation showed that the AB Train chargers are each capable of supplying the required accident loads with no adjustments required. For the A and B buses, both chargers are required to operate to supply peak accident loads, occurring seconds into the event, under this conservative assumption. With a more realistic assumption on the timing of the ESF actuations, one charger may handle the loads.

A modification to adjust the current capability of the A and B chargers to allow them to handle the conservative simultaneous actuation loads will be considered prior to a plant specific submittal. The current risk impact values provided in the JAR are for the more limiting AB train, for which each charger is capable of fulfilling the required functions. The AB train had the highest risk impact because the increased reliability of the extra charger on the AB bus is offset by the increased importance of that bus as the supplier of the turbine driven EFW pump control power. Modeling the A and B trains as both chargers required, and taking a battery out of service, the ICCDP remains less than taking the AB battery out of service. Thus, there is no significant impact on the risk results due to this change in the assumed charger capability.

Responses to this issue for the Arkansas One Unit 2 will be provided at the time of plant-specific submittals. The data for Palisades was presented for information only. Palisades does not currently plan to pursue a change to their TS in this area.

Question 10

Plant: Waterford and Palisades
LCO: Battery Out of Service

Can two chargers be operated in parallel? Are procedures available to operate two chargers in parallel when a battery is taken OOS? Are such connections made automatically?

Response 10

At Waterford Unit 3, both battery chargers are always aligned (connected) to the associated class 1E DC bus, regardless of whether the battery is inservice or out of service.

The data for Palisades was presented for information only. Palisades does not currently plan to pursue a change to their TS in this area.

Question 11

Plant: Fort Calhoun
LCO: Battery Out of Service

Please provide the revised AOT risk results.

Response 11

Response to this issue at Fort Calhoun will be provided at the time of plant specific submittal.

Question 12

Plant: Palisades
LCO: Battery Out of Service

Please verify that the reported AOT risk results reflect the worst LCO condition.

Response 12

The data for Palisades was presented for information only. Palisades does not currently plan to pursue a change to their TS in this area.

Question 13

Plant: SONGS
LCO: Battery Out of Service

Based on the JAR, the successful operation of a DC bus requires both the battery and the charger. This implies that if any IE occurs while in the LCO, the reactor trip is complicated because it involves the loss of a DC bus. With this background please discuss why the reported AOT risk is low.

Response 13

The core damage and large early release risk from an inoperable class 1E DC bus is low at SONGS Units 2 and 3 due to three major design and operational features: (1) an engineered automatic and manual AC cross-connect capability between the same train 4kV safety related buses at Units 2 and 3; (2) there are four independent class 1E DC buses at each unit each of which feeds a redundant train of safety related primary and secondary plant instrumentation, one of which feeds the turbine-driven auxiliary feedwater pump, another which feeds the Train A emergency safety features equipment, and a third which feeds the Train B emergency safety features equipment; and (3) provisions for manual operator action to close the motor-driven auxiliary feedwater pump 4kV breaker associated with an inoperable class 1E DC bus should the breaker fail to close automatically when auxiliary feedwater is demanded.

(1) The engineered AC cross-connect capability consists of an automatic cross-connect of the same train safety related 4kV buses of Units 2 and 3 upon low voltage on any 4kV bus and availability of offsite power to either bus. This design feature was included in the original plant design and was modeled in the SONGS IPE. Also, the AC cross-connect capability includes a manually initiated alignment of the emergency diesel generator in either unit to both unit's 4kV bus of the same train. The manual cross-connect requires operation of 2 interlock bypass switches in each unit and operation of the switches for the associated breakers which tie together the two unit's same train 4kV buses. The manual emergency diesel generator cross-connect feature was installed as an improvement from the IPEEE, and the specific design and PRA modeling of this feature was reviewed by the NRC in the SONGS Units 2 and 3 technical specification allowed outage time change for the emergency diesel generators from 3 days to 14 days, which was granted more than a year ago. The engineered AC cross-connect capability enhances the reliability of power to the opposite train of emergency safety features equipment not impacted by the class 1E DC bus inoperability, thus making each train of emergency safety features equipment more reliable than most other power plant designs.

(2) The provision of four independent class 1E DC buses each of which feeds a redundant train of safety related instrumentation minimizes the impact of inoperability of any one class 1E DC bus on operator indication. If a class 1E DC bus were inoperable, the operators would still have three other completely redundant, independent safety related instrumentation trains. In addition, each auxiliary feedwater train, including the turbine-driven auxiliary feedwater pump, is fed from three independent class 1E DC buses. Therefore, inoperability of a class 1E DC bus would only impact one of three auxiliary feedwater trains.

(3) Lastly, plant procedures contain provisions for manually operating the auxiliary feedwater pump 4kV breakers if they fail to close due to causes such as an inoperable class 1E DC bus. The time available to perform this action is minimally 45 minutes following an uncomplicated plant trip. The time required to perform this action is less than 10 minutes, including operator travel time to the switchgear room. This provision ensures that for the dominant plant trips, such as turbine trips, all three auxiliary feedwater pumps could be utilized to mitigate the event.

The class 1E DC bus utilized as the basis for the PRA calculations in the report was the Train B DC Bus D2, which is fed from battery B008. PRA calculations were performed for Train A, B, C, and D class 1E DC buses to determine which resulted in the highest core damage increase with inoperability of the bus. The conditional core damage frequency with each inoperable class 1E DC bus was calculated to be: Train A: 3.24E-4 per year, Train B: 3.39E-4 per year, Train C: 7.26E-5 per year, and Train D: 7.00E-5 per year. Train A and B class 1E DC buses resulted in the highest increase in core damage risk. The risk is very similar for trains A and B since Train A and B emergency safety features system designs at SONGS Units 2 and 3 are virtually identical. The Train C and D class 1E DC bus risks were significantly lower than the Train A and B class 1E DC bus risks since the loads on the Train C and D class 1E DC buses are very limited. The Train C class 1E DC bus powers the turbine-driven AFW pump and a redundant train of safety related instrumentation. The Train D class 1E DC bus only powers a redundant train of safety related instrumentation.

Question 14

Plant: All
LCO: Charger(s) Out of Service

General comment: The JAR requests modifications to the AOT without addressing the limitation on the life of the battery during the AOT. How can you ensure that the battery remains adequately charged during the entire AOT?

Response 14

The scope of the JAR covers an energized class 1E DC bus during the proposed AOT. With a battery charger out of service, the remaining or standby battery charger will be connected to the bus prior to depletion of the battery below its design basis level. This will ensure that the battery will remain charged during the entire AOT.

With a battery charger out of service at Waterford Unit 3, the remaining battery charger will supply the loads and maintain the battery charged, so battery depletion is not a concern. Both battery chargers are normally connected to the bus.

At San Onofre Units 2 and 3, the associated battery can be maintained in a charged state when the class 1E battery charger is taken out of service. The capability exists for connecting a non-1E battery charger to the DC bus in parallel and then disconnecting the class 1E battery charger in question. This activity is proceduralized and well practiced.

Question 15

Plant: ANO, Waterford, and Palisades
LCO: Charger(s) Out of Service (the risk of this LCO condition has not been reported)

The risk results generated by the PRA models that treat the battery and the charger as redundant (e.g., ANO) are only valid as long as battery is charged. Recognizing that the PRA models are based on the assumption of a 24-hour mission time, the AOT risk may be underestimated if care is not exercised.

Consider the following Scenario:

The plant enters the LCO by removing the charger(s) from service. Let's assume that during the AOT an initiating event occurs. As long as the battery is adequately charged, the affected DC bus is capable of energizing the required loads during the AOT. The affected DC bus will eventually be lost after the battery is fully discharged. This event can be prevented if the out of service charger is restored. A complete discharge of the battery is expected to occur several hours after the IE. Its timing depends on the battery size and the state of charger at the time of the IE. Because the PRA model is static, the risk results will not capture the potential for the loss of the DC bus. To obtain realistic risk results the PRA model should be quantified in two stages:

Stage 1: The initial condition is the unavailability of a charger(s); the mission time is the life of the battery serving the affected DC bus

Stage 2: The initial condition is the loss of a DC bus; the mission time is 24 hour less the life of the battery

Please address this issue.

Response 15

At Waterford Unit 3, the battery will be maintained in a charged state when an associated battery charger is inoperable. Refer to the response for Question 1. The results provided in the JAR were strictly for the worst case battery out of service, not considering chargers out of service. However, the model has been quantified, as follows, to address the scenario described, for information only. The values provided are based on the most recent version of the Waterford PRA model, and assuming the A DC bus is the affected train.

A. *Assume one charger is out of service and the second charger is lost just prior to event initiation. Therefore, battery depletion begins at T=0. Also assume the battery depletes after 4 hours.*

CCDF with A train charger out of service = 1.12E-5 per year
CCDF with A DC bus out of service = 8.55E-5 per year
Base CDF = 1.12E-5 per year

$ICCDP_{24} = \{[1.12E\text{-}5(4/24) + 8.55E\text{-}5\ (20/24)] - 1.12E\text{-}5\}^* (24/8760) = 1.7E\text{-}7$

An additional calculation was done with the bus failed at the start of the initiator to bound the scenario above. Assume the battery depletes over the course of an AOT in which both chargers have been taken out of service. Assume the battery is depleted at T=0, so the entire bus is failed and the Loss of Bus initiator for the A bus (%TDC1) is set to 1.

CCDF with A bus out of service & %TDC1 set to 1 = 8.6 E-5 per year
Base CDF = 1.12E-5 per year

$ICCDP_{24} = \{8.6\ E\text{-}5\ - 1.12E\text{-}5\}^* (24/8760) = 2.05E\text{-}7$

Responses to this issue for the Arkansas One Unit 2 will be provided at the time of plant-specific submittals. The data for Palisades was presented for information only. Palisades does not currently plan to pursue a change to their TS in this area.

16. *Summary of Updated Information Since JAR Submittal*

This section presents an update to Table 6-2 of the JAR. The changes include: (1) the addition of the incremental increase ($ICCDP_{BATT}$) to account for increased unreliability of the charger when a battery is removed from service [See response to Question 6], and (2) a revised Waterford 3 estimate based on an improved PSA calculation for the station blackout event. The table contains updated information for San Onofre Units 2 and 3 and Waterford Unit 3 only. The information for the other plants will be provided to the NRC, along with associated RAI responses, at the time of the plant specific AOT extension submittal.

Table 6-2 (of JAR)
ICCDP Estimates due to Unavailability of a Battery/Battery Charger

CEOG Plant	Configuration Analyzed	CDF_B [Per Year]	$CCDF_{OOS}$ [Per Year]	Full AOT [hours]	ICCDP	$ICCDP_{BATT}$ [Note 2]	ICCDP Increase Over Current AOT [Note 1]
SONGS 2 & 3	Battery B008 out of service (See Figure 6 of Attachment 3)	6.99E-5	3.39E-4	24	7.37E-7	2.10E-8	6.95E-7
				8	2.46E-7	7.00E-9	1.90E-7
				2	6.14E-8	1.75E-9	0
WSES-3	Battery 3AB-S out of service (See Figure 5 of Attachment 3)	1.12E-5	2.05E-5	24	2.55E-8	3.49E-8	5.54E-8
				8	8.49E-9	1.16E-8	1.51E-8
				2	2.12E-9	2.91E-9	0

Notes:
1. *The ICCDP increase over the current AOT of 2 hours is based on the sum of ICCDP and $ICCDP_{BATT}$.*
2. *$ICCDP_{BATT}$ reflects the worst case sensitivity. Therefore, the total ICCDP is conservative.*

Please note that for Waterford 3, these results were calculated using the latest revision of the PRA model (Revision 2, Change 1). The results differ from those originally submitted due to changes made between the Revision 1 and Revision 2 Change 1 models. The significant change that affected the DC power sources was the modification of the Station Blackout Sequences to more accurately reflect the probability of recovering offsite power. These changes decreased the resulting risk of the SBO sequences, in which the batteries play a very important role. Thus, the overall significance of the batteries was also decreased. In developing these results, a change to the model was also made to reflect that both A chargers and both B chargers are required to supply postulated worst case accident loads.

Based on the update to Table 6-2 of the JAR as presented above, an update to Table 6-4 of the JAR is also presented in this section for consistency. Similar to above, the update to Table 6-4 contains information for San Onofre Units 2 and 3 and Waterford Unit 3. The information for the other plants will be submitted to the NRC at the time of the AOT extension submittal.

Table 6-4 (of JAR)
ICLERP Estimates due to Unavailability of a Battery/Battery Charger

CEOG Plant	LERF Model	$CLERF_B$ [Per Year]	$CLERF_{OOS}$ [Per Year]	Full AOT [hours]	ICCDP [From Updated Table 6-2]	$ICCDP_{BATT}$ [From Updated Table 6-2] Note 2	ICLERP
SONGS 2&3	Automated LER event tree	1.32E-6	1.22E-5	24	7.37E-7	2.10E-8	2.98E-8
				8	2.46E-7	7.00E-9	9.94E-9
				2	6.14E-8	1.75E-9	2.48E-9
WSES-3	Simplified LER event tree	[Note 1]	[Note 1]	24	2.55E-8	3.49E-8	4.30E-9
				8	8.49E-9	1.16E-8	1.43E-9
				2	2.12E-9	2.91E-9	3.58E-10

Notes:
1. *Not required for simplified LERF Model*
2. *$ICCDP_{BATT}$ reflects the worst case sensitivity. Therefore, the total ICCDP is conservative.*

Footnote 4 for Table 4-2 states:

> *"Place both chargers in service for the affected battery immediately, and restore the required* ***charger*** *to OPERABLE status within* ***7 days*** *or the reactor shall be placed in HOT SHUTDOWN within 12 hours and the reactor shall be placed in COLD SHUTDOWN within 48 hours."*

Replace this footnote with the following:

> *"Place both chargers in service for the affected battery immediately, and restore the required* ***battery*** *to OPERABLE status within* ***24 hours*** *or the reactor shall be placed in HOT SHUTDOWN within 12 hours and the reactor shall be placed in COLD SHUTDOWN within 48 hours."*

On page 35 of 68 of the JAR, the following statement was made.

> ***"Hence, the plant risk for a proposed AOT of 8 or 24 hours is well within the acceptance guideline value."***

This statement is being clarified because the value provided for San Onofre Units 2 and 3 is above the acceptance criterion of 5E-7. However, the evaluation provided the maximum risk for the full AOT/CT and not the expected risk. SCE has proceduralized contingency and availability of alternative non-1E equipment which was not credited in the risk assessment. These actions will reduce the plant exposure times to the higher risks to much less than 24 hours (See response to question 13). Therefore, the expected risk will be lower than the maximum risk. Based on average duration in the LCO the San Onofre Units 2 &3 risk will also fall within the general guidelines. Therefore, clarification to the above statement is as follows:

> ***"Hence for plants currently pursuing the AOT extension, the plant risk for a proposed AOT of 24 hours is within or somewhat above the acceptance guideline value. When the average LCO entry duration is considered, along with SCE's contingency actions, the risk for both plants will be within the acceptance guidelines."***

*On page 38 of 68 of the JAR (2nd paragraph), add the word "**charger**" between the words "battery" and "capacity" in the following sentence:*

> *"A comparison of the results from this assessment with the results for the case with adequate battery capacity shows that the dominant contributors to core damage frequency are the same."*

Hence, the sentence becomes:

> *"A comparison of the results from this assessment with the results for the case with adequate battery* ***charger*** *capacity shows that the dominant contributors to core damage frequency are the same."*

Also, on page 38 of 68 of the JAR, change equation ***6-3*** *to* ***(6-4)****.*

On page 39 of 68 of the JAR (2nd paragraph), change equation ***(6-3)*** *to* ***(6-4)****.*

*Also on page 39 of 68 of the JAR (3rd paragraph), delete the word "**inverter**" from the following sentence:*

> *"At SONGS 2&3, the removal of a class 1E battery from service requires the associated vital bus **inverter** to be transferred to its alternate power supply, then the battery charger is also removed from service."*

Hence, the sentence becomes:

> *"At SONGS 2&3, the removal of a class 1E battery from service requires the associated vital bus to be transferred to its alternate power supply, then the battery charger is also removed from service."*

On page 45 of 68 of the JAR, replace the paragraph with the follow:

> *"Risk associated with the implementation of the proposed technical specification changes will be managed in accordance with the requirements of 10 CFR 50.65(a)(4). This regulation requires licensees to assess and manage the risk that may result from maintenance activities and applies to all modes of reactor operation."*

Attachment to CEOG-00-327. Nov 21, 2000

Markup Pages Illustrating the Incorporation of RAI Responses into CE NPSD-1184: DC Power Source Allowed Outage Time Extension

2.0 SCOPE OF PROPOSED CHANGE TO TECHNICAL SPECIFICATION

The Limiting Conditions for Operation (LCO) of Section 3.8.4 of NUREG-1432, Revision 1, states that "The Train A and Train B DC electrical power subsystems shall be operable" during MODES 1, 2, 3 and 4. The required action for an inoperable DC electrical power subsystem during these modes of operation calls for restoring the DC electrical power subsystem to OPERABLE status with 2 hours. The 2 hour AOT/CT is based on a discussion provided in Regulatory Guide 1.93, "Availability of Electric Power Sources", [Ref. 3]. The intent of this effort is to use risk-informed arguments to support a change to the AOT/CT for these LCOs from the current value of 2 hours to either 8 or 24 hours, depending on the plant design. The scope of this effort covers a class 1E 125 VDC bus that remains energized by one of its sources (i.e., battery or battery charger). The AOT/CT extension that is being proposed in this JAR does not apply to conditions where (1) the class 1E battery charger(s) for the affected DC bus are out of service and the charge on the battery is not being maintained, or (2) the DC bus is de-energized and its associated vital 120 V AC bus is also de-energized.

The specific AOT/CT modifications and their relative impact are summarized in Table 2-1 for Arkansas Nuclear One Unit 2 (ANO-2), Fort Calhoun Station (FCS), San Onofre Nuclear Generating Station Units 2 & 3 (SONGS 2&3), and Waterford Steam Electric Station Unit 3 (WSES-3). The risk increments associated with implementation of the AOT/CT extension identified in the table are based on plant specific analyses. The 24 hour AOT/CT extension request reflects plant uniqueness in the DC electrical systems, which include additional redundancy in the class 1E batteries and their respective chargers. CE PWR designs in this category include SONGS 2&3 and WSES-3. Results for Palisades (not shown in Table 2-1) are provided within the body of the report to confirm the adequacy of their current 24 hour AOT for this condition. Risk data for the Palo Verde Nuclear Generating Station Units 1, 2 & 3 (PVNGS-1, 2 & 3), St. Lucie Units 1 & 2 (SL-1&2), Millstone Unit 2 (MP-2), and Calvert Cliffs Units 1 & 2 (CC 1&2) and their respective recommended AOT extension are not included in this report. Such information will be provided at the time a plant specific technical specification change request is submitted. These later submittals will utilize the general methodology contained in this report.

TABLE 2-1
Summary of Proposed AOT/CT Modifications

CEOG Plant	Proposed AOT/CT [hours]	ICCDP Increase over Current AOT/CT	ICLERP Increase over Current AOT/CT
ANO-2	8	4.51E-7	3.21E-8
FCS	8	4.96E-7	2.68E-8
SONGS 2&3	24	6.95E-7	2.73E-8
WSES-3	24	5.54E-8	3.94E-9

4.2 Improved Standard Technical Specification Guidance

Section 3.8.4 of NUREG-1432, Revision 1, describes the LCO requirement for DC power sources. This includes the actions to be taken when the LCO requirements cannot be satisfied and the completion time for accomplishing the required actions. Section 2 of this report provides a description of NUREG-1432 definitions of the conditions when LCO requirements for the batteries and their respective chargers are not satisfied.

This report provides risk-informed justifications for AOT/CT extensions corresponding to the actions in response to Condition A as defined in NUREG-1432. This condition and the existing corresponding required action and completion time are provided in Attachment 1.

4.3 "Customized" Technical Specifications

The "customized" TSs for DC power sources differ from those in the two versions of STSs. These differences include the duration of the allowed outage time and the descriptions of the surveillance requirements. The CEOG plants that currently employ the "customized" TS format are the Fort Calhoun Station and Palisades units. The current TS and allowed outage times for DC power sources of these units are as shown in Table 4-2. References 17 and 18 were used to summarized the information in this table.

Table 4-2
Summary of Customized TS DC Electrical Power Sources (Modes 1, 2, 3, 4)

CEOG Plant	TS #	Limiting Conditions for Operation	TS Required Action	Comments	Allowed Outage Time (AOT)	
					Class 1E Battery	Class 1E Battery Charger
FCS	2.7	The reactor shall not be heated up or maintained at temperatures above 300 °F unless the following electrical systems are operable: k. Station batteries No. 1 and 2 (EE-8A and EE-8B) including one charger on each 125 V d-c bus No. 1 and 2 (EE-8F and EE-8G)	a) If the minimum station battery requirements cannot be satisfied (Note 1) b) Modification of battery charger minimum requirements (Note 2)	One spare battery charger is available (See Figure 1 of Attachment 2)	None	8 hours (Note 2)
PAL	3.7.4	The following DC electrical power sources shall be OPERABLE: a. Station Battery ED-01 and Charger ED-15, and b. Station Battery ED-02 and Charger ED-16	a) With one required charge inoperable (Note 3) b) With one battery inoperable: (Note 4)	Two spare battery chargers are available (See Figure 2 of Attachment 2)	24 hours	7 days

Notes for Table 4-2
1. The unit shall be placed in at least HOT SHUTDOWN within 6 hours, ..., and in at least COLD SHUTDOWN within the following 30 hours.
2. Two battery chargers may be inoperable for up to 8 hours provided battery charger No. 1 (EE-8C) or No. 2 (EE-8D) is operable. If this modification to the minimum requirement is violated, the reactor shall be placed in hot shutdown condition within the following 12 hours. If the violation is not corrected within an additional 12 hours, the reactor shall be placed in a cold shutdown condition within an additional 24 hours.
3. Place the cross-connected charger for the affected battery in service immediately, and restore the required charger to OPERABLE status within 7 days or the reactor shall be placed in HOT SHUTDOWN within 12 hours and the reactor shall be placed in COLD SHUTDOWN within 48 hours.
4. Place both chargers in service for the affected battery immediately, and restore the required battery to OPERABLE status within 24 hours or the reactor shall be placed in HOT SHUTDOWN within 12 hours and the reactor shall be placed in COLD SHUTDOWN within 48 hours.

electrical systems. Such extensions may be justified from a risk perspective based on regulatory approaches contained in RG 1.177. Technical support for this request is presented in Sections 6.2 and 6.3.

6.2 Assessment of Deterministic Factors

The deterministic impact of a loss of a battery or charger varies among the CE designed NSSS units. This variation is due to differences in component redundancy and battery loading alignments. Thus, the impact of component (battery/charger) unavailability is greater for plants with lesser levels of component redundancy. This is also observed in review of PSA results (see Section 6.3). The following provides a deterministic assessment of unavailability of a battery or battery charger when the available class 1E DC electrical power sources are one less than the LCO. For a plant configuration where a battery or its associated battery charger is out of service, the unaffected division of class 1E DC power would still remain fully functional. [Note that PVNGS 1, 2 & 3, SONGS 2&3 and WSES-3 have additional battery/charger redundancies that make them more robust to a Loss of Offsite Power (LOP) event.] The deterministic assessment discusses the impact of the unavailability of a battery/charger following both an internal and external initiating event.

Internal Event Considerations

Unavailability of DC power sources decreases the capability of the plant to respond to reactor trips, LOP events and Station Blackout (SBO) events. Early CE designed units are typically designed such that the ESF buses are powered as part of the plant hotel loads. Following normal reactor trips the batteries provide control power to allow a fast transfer from the on-site alignment to the switchyard alignment, for those plants with fast transfer capability. Plants capable of fast transfer are ANO-2, FCS, SL-1&2, WSES-3, and MP-2. For the other CE plant design, the ESF buses are powered from the switchyard during normal power operation and are not subject to fast transfer following a turbine generator trip.

Following a LOP event the DC power is used for starting the Emergency Diesel Generators (EDGs). Unavailability of a battery renders its respective EDG inoperable, which in turn causes an entire train of ESF equipment to become INOPERABLE. Thus, should a loss of offsite power occur the plant relies entirely on the remaining train of AFW for heat removal. Failure of the respective AFW pump, without timely recovery of offsite power would result in core damage.

If the remaining battery fails upon LOP and no alternate AC (AAC) is provided, a condition will develop which results in total loss of power to the plant (no EDGs and no battery backup). The Turbine-driven pump at the plant may be available and would function, so long as the steam generators are not overfilled. However, all AFW control is performed "blind", that is without available instrumentation (only after both batteries fail will all instrumentation be lost). This potential is mitigated in some CE designed PWRs by either increased redundancy in DC systems or additional plant features that make them more robust to a LOP event. For example, SL-1&2 can cross-tie their units to power a bus from an EDG of the other unit. PVNGS 1, 2 & 3 has on

6.3.3 Summary of Results for "At Power" Risk

6.3.3.1 ICCDP Assessment

The appropriate CCDFs supplied by the CEOG member utilities were substituted into Equation (6-1) to obtain the risk resulting from an increase in core damage due to a DC power source out of service. The CCDFs shown in Table 6-2 are bounding values for the various CE designed PWRs. Since the class 1E DC electrical power system configuration varies from plant to plant, the configuration that produced the bounding CCDF also varies among the CEOG member utilities. The loading of the DC electrical power subsystems varies from plant to plant. This also is an important contributor to the CCDF. The bounding configuration for each plant is shown in the figure identified in Table 6-2. The figure provides a pictorial representation of the DC component (i.e., battery or associated charger) that is assumed to be out of service, thus causing the LCO to be entered. The out of service equipment is shown with an "X" drawn through it. Potential AOT durations were selected and substituted along with the CCDFs into Equation (6-2) to obtain the risk resulting from incremental core damage probability due to a DC power source out of service. The resulting ICCDPs for the CEOG member utilities are summarized in Table 6-2.

Table 6-2

ICCDP Estimates due to Unavailability of a Battery/Battery Charger

CEOG Plant	Configuration Analyzed	CDF_B [Per Year]	$CCDF_{OOS}$ [Per Year]	Full AOT [hours]	ICCDP	ICCDP Increase Over Current AOT
ANO-2	Battery 2D11 out of service (See Figure 1 of Attachment 3)	2.08E-5	6.79E-4	24	1.80E-6	1.65E-6
				8	6.01E-7	4.51E-7
				2	1.50E-7	0
CC-1&2	[Note 1]	[Note 1]	[Note 1]	24	-	-
				8	-	-
				2	-	-
FCS	Batt. Charger #2 out of service (See Figure 2 of Attachment 3) [Note 4]	1.85E-5	7.42E-4	24	1.98E-6	1.82E-6
				8	6.61E-7	4.96E-7
				2	1.65E-7	0
MP-2	[Note 1]	[Note 1]	[Note 1]	24	-	-
				8	-	-
				2	-	-
PAL	Battery #2 out of service (See Figure 3 of Attachment 3)	5.15E-5	2.05E-4	24	4.21E-7	[Note 2]
				8	1.40E-7	
				2	3.50E-8	
PVNGS 1, 2 & 3	[Note 1]	[Note 1]	[Note 1]	24	-	-
				8	-	-
				2	-	-
SONGS 2 & 3	Battery B008 out of service (See Figure 6 of Attachment 3)	6.99E-5	3.39E-4	24	7.37E-7	6.95E-7
				8	2.46E-7	1.90E-7
				2	6.14E-8	0

Table 6-2 (Cont'd)

ICCDP Estimates due to Unavailability of a Battery/Battery Charger

CEOG Plant	Configuration Analyzed	CDF_B [Per Year]	$CCDF_{OOS}$ [Per Year]	Full AOT [hours]	ICCDP	ICCDP Increase Over Current AOT
SL-1	[Note 1]	[Note 1]	[Note 1]	24	-	-
				8	-	-
				2	-	-
SL-2	[Note 1]	[Note 1]	[Note 1]	24	-	-
				8	-	-
				2	-	-
WSES-3	Battery 3AB-S out of service (See Figure 5 of Attachment 3)	1.12E-5	2.05E-5	24	2.55E-8	5.54E-8
				8	8.49E-9	1.51E-8
				2	2.12E-9	0

Notes for Table 6-2
1. Relevant data from this plant will be provided at the time of submittal.
2. Palisades TS includes a 24 hour AOT for DC subsystem INOPERABLE.
3. ICCDP increase over current AOT is defined as the difference between the ICCDP for the proposed AOT and the ICCDP for the current AOT.
4. The limiting DC power configuration analyzed for FCS involves battery charger #2 being out of service. At FCS, the current Tech Spec allows an 8 hour outage time for a battery charger and none for the battery. The ICCDPs for FCS shown above confirms the appropriateness of the AOT for the chargers. These values are used as bounding values for ICCDP due to a battery out of service.

The ICCDP results summarized in Table 6-2 are based on the full outage duration of 2 hours, 8 hours or 24 hours. The results for CEOG member utilities that provided information show that the plant risk is below or marginally above the acceptance guideline value of 5.0E-07 for a proposed AOT of 8 hours.

The class 1E DC electrical power systems at SONGS 2&3 and WSES-3 have added redundancy associated with the battery and battery charger. This feature results in a plant risk due to ICCDP, which is well below the acceptance guideline value for a proposed AOT of 8 hours. The risk for these units is still within the bounds of the acceptance guideline even for a proposed AOT of 24 hours. Hence for plants currently pursuing the AOT extension, the plant risk for a proposed AOT of 24 hours is within or somewhat above the acceptance guideline value. When the average LCO entry duration is considered, along with SCE's contingency actions, the risk for both plants will be within the acceptance guidelines. It should be noted that the Palisades plant already includes a 24 hour AOT for DC battery inoperability. The results for the Palisades evaluation confirm the appropriateness of the existing TS.

In the majority of cases, loss of offsite power initiator dominates the plant risk when a battery is out of service. With the battery out of service concurrent with a loss of offsite power event, the associated emergency diesel generator will fail to start. This condition results in the inoperability of one train of safeguard equipment. A combined failure of the remaining EFW or AFW pump(s) will result in the loss of secondary side heat removal capability. Core damage will occur following the consequential failure of once through cooling, for those plant equipped with Feed and Bleed capability. For the plants without Feed and Bleed capability, core damage will also occur following loss of the alternate secondary heat removal capability.

chargers will trip off line following a reactor trip caused by events that require starting of the EDGs. Tripping of the battery chargers results in a consequential loss of the associated class 1E 125 VDC bus. The assessment was performed for a representative unit for the CEOG member utilities.

Results obtained for assessing the risk impact due to inadequate battery charger capacity show that the dominant contributors to the conditional core damage frequency involve core damage scenarios initiated by a loss of offsite power. A plant configuration with a class 1E 125 VDC battery out of service that experiences a loss of offsite power causes the associated battery charger to lose its source of power. Consequently, the affected DC bus becomes unavailable regardless of the charger capacity. For this condition, the affected EDG will not start and one train of safeguard equipment will become inoperable because of the DC power dependency. A comparison of the results from this assessment with results for the case with adequate battery charger capacity shows that the dominant contributors to core damage frequency are the same. In either case, with or without adequate battery charger capacity, loss of offsite power is the dominant contributor to risk. Consequently, the results presented in Table 6-2 are applicable to battery chargers with and without adequate capacity to handle transient loading demand requirements.

(b) <u>Impact of DC Battery Unavailability on the Potential for an Increase in Loss of DC Bus Frequency</u>

With a class 1E 125 VDC battery out of service, the associated battery chargers are the only source of power for the affected DC bus. During this plant configuration for the proposed AOT, failure of the battery chargers would cause an increase in the loss of DC bus frequency. A bounding assessment was performed for the CEOG member utilities to determine the risk impact due to the potential increase in loss of DC bus frequency with a battery out of service. The assessment may or may not reflect current operating practices of the DC subsystems allowed by the current 2 hour AOT at all of the CEOG member utilities. The intent of the assessment is to determine the impact on loss of DC bus frequency with the battery charger(s) as the sole source of power for the affected DC bus during the proposed extension to the AOT.

With a class 1E 125 battery out of service, the dominant contributor to loss of the associated DC bus is failure of the battery chargers. The class 1E DC power configuration schematics provided in Attachment 2 show that a DC bus for all CE designed units with the exception of SONGS 2&3 can be powered by two battery chargers and the associated battery. For SONGS 2&3, a single battery charger and the associated battery provide power to each of the DC buses. The ICCDP given the potential for increasing the loss of a DC bus frequency with a battery out of service can be determined by the following expression:

$$ICCDP_{BATT} = \lambda_c \; AOT \; CCDP_{LODC} \qquad (6\text{-}4)$$

where,

$ICCDP_{BATT}$	=	Incremental conditional core damage probability given the potential increase in loss of a DC bus frequency
λ_c	=	The overall failure rate of the battery chargers (per hour)
AOT	=	Allowed outage time (hours)
$CCDP_{LODC}$	=	Conditional core damage probability given a loss of DC bus

The assessment used generic failure data for the battery chargers, and an assumed bounding value for CCDP given the loss of a DC bus based on the current PRAs for the CE designed plants. A generic failure rate of 2.39E-05 per hour [Ref. 8] and a beta factor of 1.26E-02 [Ref. 9] were used to estimate the overall failure rate of 3.01E-07 per hour for two battery chargers. A $CCDP_{LODC}$ value of 2.0E-02 was assumed based on a review of current PRA information for the CE designed plants. In the majority of cases, the $CCDP_{LODC}$ is approximately an order of magnitude smaller than 2.0E-02. Therefore, a $CCDP_{LODC}$ of 2.0E-02 is considered to be bounding for all of the CE designed PWRs.

Substituting the above values and an AOT of 2 hours into Equation (6-4) yields a value of 1.2E-08 for $ICCDP_{BATT}$. Similar substitutions for an AOT of 8 or 24 hours yield a $CCDP_{BATT}$ value of 4.8E-08 and 1.4E-7, respectively. These values are not included in the results presented in Table 6-2 and would contribute less than 10% to the ICCDP increase over the current AOT. Based on the above assessment, the ICCDP due to the potential for increasing loss of DC bus frequency with the associated battery out of service is small and can be neglected.

It should be noted that the overall failure rate used for the battery chargers is not applicable to SONGS 2&3 because each of the DC subsystems at this utility includes a single battery charger. However, SONGS 2&3 procedure does not allow the battery charger to be the sole source of power to the associated DC bus. At SONGS 2&3, the removal of a class 1E battery from service requires the associated vital bus to be transferred to its alternate power supply, then the battery charger is also removed from service. Therefore, the battery and associated battery charger are always operated in tandem. Consequently, the potential increase in loss of a DC bus frequency with a battery out of service is negligible at SONGS 2&3.

As indicated, generic failure data for the battery chargers was used in the assessment. Such data was obtained from plant configurations where both the battery and associated battery charger(s) are connected to the class 1E DC bus. The battery charger may become less reliable when it is the sole source of power to a class 1E DC bus. To address this concern, a sensitivity evaluation was performed by varying the independent failure rate and beta factor of a battery charger. The sensitivity values were then substituted into Equation (6-4) to estimate the increase in CCDP. The results of the sensitivity evaluation show that by increasing both the independent failure rate of a battery charger and the beta factor by an order of magnitude, the incremental contribution to CCDP for the proposed 24 hour AOT duration would be less than 5.0E-8. Refer to Question 6 in Attachment 4 for details.

PAL	Simplified LER event tree	[Note 1]	[Note 1]	24	4.21E-7	3.00E-8
				8	1.40E-7	9.97E-9
				2	3.50E-8	2.49E-9

Table 6-4 (Cont'd)

ICLERP Estimates due to Unavailability of a Battery/Battery Charger

CEOG Plant	LERF Model	$CLERF_B$ [Per Year]	$CLERF_{OOS}$ [Per Year]	Full AOT [hours]	Total ICCDP [From Table 6-2]	ICLERP
PVNGS 1, 2 & 3	[Note 2]	[Note 2]	[Note 2]	24	-	-
				8	-	-
				2	-	-
SONGS 2&3	Automated LERF model	1.32E-6	1.22E-5	24	7.58E-7	2.98E-8
				8	2.53E-7	9.94E-9
				2	6.32E-8	2.48E-9
SL-1	[Note 2]	[Note 2]	[Note 2]	24	-	-
				8	-	-
				2	-	-
SL-2	[Note 2]	[Note 2]	[Note 2]	24	-	-
				8	-	-
				2	-	-
WSES-3	Simplified LER event tree	[Note 1]	[Note 1]	24	6.04E-8	4.30E-9
				8	2.01E-8	1.43E-9
				2	5.03E-9	3.58E-10

Notes for Table 6-4

1. Not required for the simplified LERF model
2. Relevant data from this plant will be provided at the time of submittal

6.3.4 LERP Sensitivity Studies

(a) Thermally-Induced SGTR

Thermally-induced SGTR depends on the steam generator design, age, operating history, and the time in cycle. Each factor or combination of factors may influence the likelihood of large early releases. In this evaluation, a conservative probability of 0.5 was assumed for failure of the steam generator tube prior to failure of the rector vessel lower head. A sensitivity evaluation was performed to determine the impact of the likelihood of thermally-induced SGTR on large early releases. This involved varying the probability of thermally-induced SGTR from 0.6 to 0.1 and then requantifying the simplified LER event tree to estimate the normalized LERPs for each CEOG plant group. Variations in the probability for thermally-induced SGTR affect the probabilities of large early scenarios LERP-1 and LERP-2 (see Figure 6-1) for all of the CEOG plant groups. All of the other probabilities within the plant group for the remaining large early scenarios are unaffected. The results of this sensitivity evaluation are summarized in Table 6-5.

7.0 CONFIGURATION RISK MANAGEMENT PROGRAM

Risk associated with the implementation of the proposed technical specification changes will be managed in accordance with the requirements of 10 CFR 50.65(a)(4). This regulation requires licensees to assess and manage the risk that may result from maintenance activities and applies to all modes of reactor operation.

February 26, 2001
CEOG-01-060

NRC Project 692

U.S. Nuclear Regulatory Commission
Attn: Document Control Desk
Washington, DC 20555-0001

Subject: Response to Information Request concerning CEOG Topical Report CE NPSD-1184, "Joint Application Report for DC Power AOT Extension"

The purpose of this letter is to submit the attached responses to staff questions provided during recent telephone conversations regarding the subject report. The staff requested additional information regarding the average change in core damage frequency and the average change in large early release frequency resulting from the DC power source AOT extension. This letter documents the responses for use by the staff. Westinghouse and the CEOG utilities are prepared to discuss these responses and will meet with the staff, if necessary, in order to facilitate this review.

Please do not hesitate to call me at 623-393-5882 or Gordon Bischoff, CEOG Project Office, at 860-285-5494 if you have any questions.

Sincerely,

Richard G. Bernier

Richard Bernier
Chairman, CE Owners Group

Attachment: As Stated
cc w/2 copies: J. S. Cushing (OWFN, 4D-7)

cc: G. Bischoff, W
V. Paggen, W
PSA Subcommittee
Licensing Subcommittee
CEOG Library Task 849

Responses to RAI
Regarding CE NPSD-1184
Average Change in CDF and LERF Resulting from
DC Power Source AOT Extension

In recent telephone conversations between the NRC staff and certain CEOG member utilities (Southern California Edison and Entergy Operations – Waterford 3), the NRC staff requested additional information on CEOG Topical Report CE NPSD-1184, "Joint Application Report for DC Power Source AOT Extension." The request involved the submittal of the average change in core damage frequency (ΔCDF) and average change in large early release frequency (ΔLERF) resulting from the DC power source AOT extension. The following additional information is provided in response to this request.

The ΔCDF and ΔLERF for the San Onofre Nuclear Generating Station Units 2 and 3 (SONGS 2&3) and the Waterford Steam Electric Station Unit 3 (WSES-3) are summarized below.

Average Change in CDF and LERF
Due to DC Power Source AOT Extension

CEOG Plant	AOT [hrs]	ΔCDF [Per Year]	ΔLERF [Per Year]
SONGS 2&3	24	7.6E-07	3.0E-08
WSES-3	24	6.0E-08	4.3E-09

These values were derived from the updated ICCDP and ICLERP values in responses to the RAIs on CE NPSD-1184, which were transmitted to the NRC staff via letter CEOG-00-327 on November 21, 2000. The above ΔCDF and ΔLERF values are based on an assumed average entry of once per year into the LCO for a duration of 24 hours. Because on-line maintenance of a class 1E battery is a rare event, the values presented above are very conservative. Southern California Edison does not anticipate any corrective maintenance of a class 1E DC power source that would utilize the full-extended AOT (based on a review of prior maintenance history). Also, Southern California Edison does not plan any changes to its planned preventive maintenance program of the DC power source that would utilize the full-extended AOT. Entergy Operations anticipates entering the LCO and utilizing the extended AOT for only corrective maintenance activity, which is a rare event.

Regarding the recent (February 3, 2001) fire at SONGS Unit 3, the increase in the frequency of this event impacted the average SONGS Living PRA model CDF and LERF (i.e., increase of 3.0E-6 per year and 6.0E-8 per year, respectively). The impact is a negligible contributor to the DC power source ICCDP and ICLERP (i.e., 1.0E-9 and 1.0E-10, respectively). Thus the impact of the recent fire event at SONGS Unit 3 on the DC Power Source AOT extension is insignificant.

The results of the evaluation demonstrate that the proposed AOT extension provides plant operational flexibility while simultaneously allowing plant operation with an acceptable level of risk.

This page intentionally blank.

CEOG COMBUSTION ENGINEERING OWNERS GROUP

CE Nuclear Power LLC | Baltimore Gas & Electric Calvert Cliffs 1, 2 | Entergy Operations, Inc. ANO 2 WSES Unit 3 | Korea Electric Power Corp. YGN 3, 4 Ulchin 3,4 | Omaha Public Power District Ft. Calhoun

Arizona Public Service Co. Palo Verde 1, 2, 3 | Consumers Energy Co. Palisades | Florida Power & Light Co. St. Lucie 1, 2 | Northeast Utilities Service Co. Millstone 2 | Southern California Edison SONGS 2,3

April 10, 2001
CEOG-01-091

NRC Project 692

U.S. Nuclear Regulatory Commission
Attn: Document Control Desk
Washington, DC 20555-0001

Subject: Response to Information Request concerning CEOG Topical Report CE NPSD-1184, "Joint Application Report for DC Power AOT Extension"

The purpose of this letter is to submit the attached response to staff questions provided during recent telephone conversations regarding the subject report. This response clarifies the requirements for DC System operability as defined in Section 2.0 of the report.

Westinghouse and the CEOG utilities are prepared to discuss this response, if needed, in order to facilitate the staff's review of CE NPSD-1184.

Please do not hesitate to call me at 623-393-5882 or Gordon Bischoff, CEOG Project Office, at 860-285-5494 if you have any questions.

Sincerely,

Richard G. Bernier

Richard Bernier
Chairman, CE Owners Group

Attachment: As Stated
cc w/2 copies: J. S. Cushing (OWFN, 4D-7)

cc: G. Bischoff, W
PSA Subcommittee
Licensing Subcommittee
CEOG Library Task 849

Markup Page Illustrating the Incorporation of RAI Response into CE NPSD-1184: DC Power Source Allowed Outage Time Extension

2.0 SCOPE OF PROPOSED CHANGE TO TECHNICAL SPECIFICATION

The Limiting Conditions for Operation (LCO) of Section 3.8.4 of NUREG-1432, Revision 1, states that "The Train A and Train B DC electrical power subsystems shall be operable" during MODES 1, 2, 3 and 4. The required action for an inoperable DC electrical power subsystem during these modes of operation calls for restoring the DC electrical power subsystem to OPERABLE status with 2 hours. The 2 hour AOT/CT is based on a discussion provided in Regulatory Guide 1.93, "Availability of Electric Power Sources," [Ref. 3]. The intent of this effort is to use risk-informed arguments to support a change to the AOT/CT for these LCOs from the current value of 2 hours to either 8 or 24 hours, depending on the plant design. The scope of this effort covers a DC system where the DC bus remains energized from either a battery or a battery charger, one of which must be operable. ~~The scope of this effort covers a class 1E 125 VDC bus that remains energized by one of its sources (i.e., battery or battery charger). The AOT/CT extension that is being proposed in this JAR does not apply to conditions where (1) the class 1E battery charger(s) for the affected DC bus are out of service and the charge on the battery is not being maintained, or (2) the DC bus is de-energized and its associated vital 120 V AC bus is also de-energized.~~

The specific AOT/CT modifications and their relative impact are summarized in Table 2-1 for Arkansas Nuclear One Unit 2 (ANO-2), Fort Calhoun Station (FCS), San Onofre Nuclear Generating Station Units 2 & 3 (SONGS 2&3), and Waterford Steam Electric Station Unit 3 (WSES-3). The risk increments associated with implementation of the AOT/CT extension identified in the table are based on plant specific analyses. The 24 hour AOT/CT extension request reflects plant uniqueness in the DC electrical systems, which include additional redundancy in the class 1E batteries and their respective chargers. CE PWR designs in this category include SONGS 2&3 and WSES-3. Results for Palisades (not shown in Table 2-1) are provided within the body of the report to confirm the adequacy of their current 24 hour AOT for this condition. Risk data for the Palo Verde Nuclear Generating Station Units 1, 2 & 3 (PVNGS-1, 2 & 3), St. Lucie Units 1 & 2 (SL-1&2), Millstone Unit 2 (MP-2), and Calvert Cliffs Units 1 & 2 (CC 1&2) and their respective recommended AOT extension are not included in this report. Such information will be provided at the time a plant specific technical specification change request is submitted. These later submittals will utilize the general methodology contained in this report.

TABLE 2-1
Summary of Proposed AOT/CT Modifications

CEOG Plant	Proposed AOT/CT [hours]	ICCDP Increase over Current AOT/CT	ICLERP Increase over Current AOT/CT
ANO-2	8	4.51E-7	3.21E-8
FCS	8	4.96E-7	2.68E-8
SONGS 2&3	24	6.95E-7	2.73E-8
WSES-3	24	5.54E-8	3.94E-9

CE NPSD-1184-A, Rev 00

Westinghouse Electric Company, LLC
2000 Day Hill Road
Windsor, Connecticut 06095-0500