DWG. NO. MC-ISIL-1593-01.02 REV 0

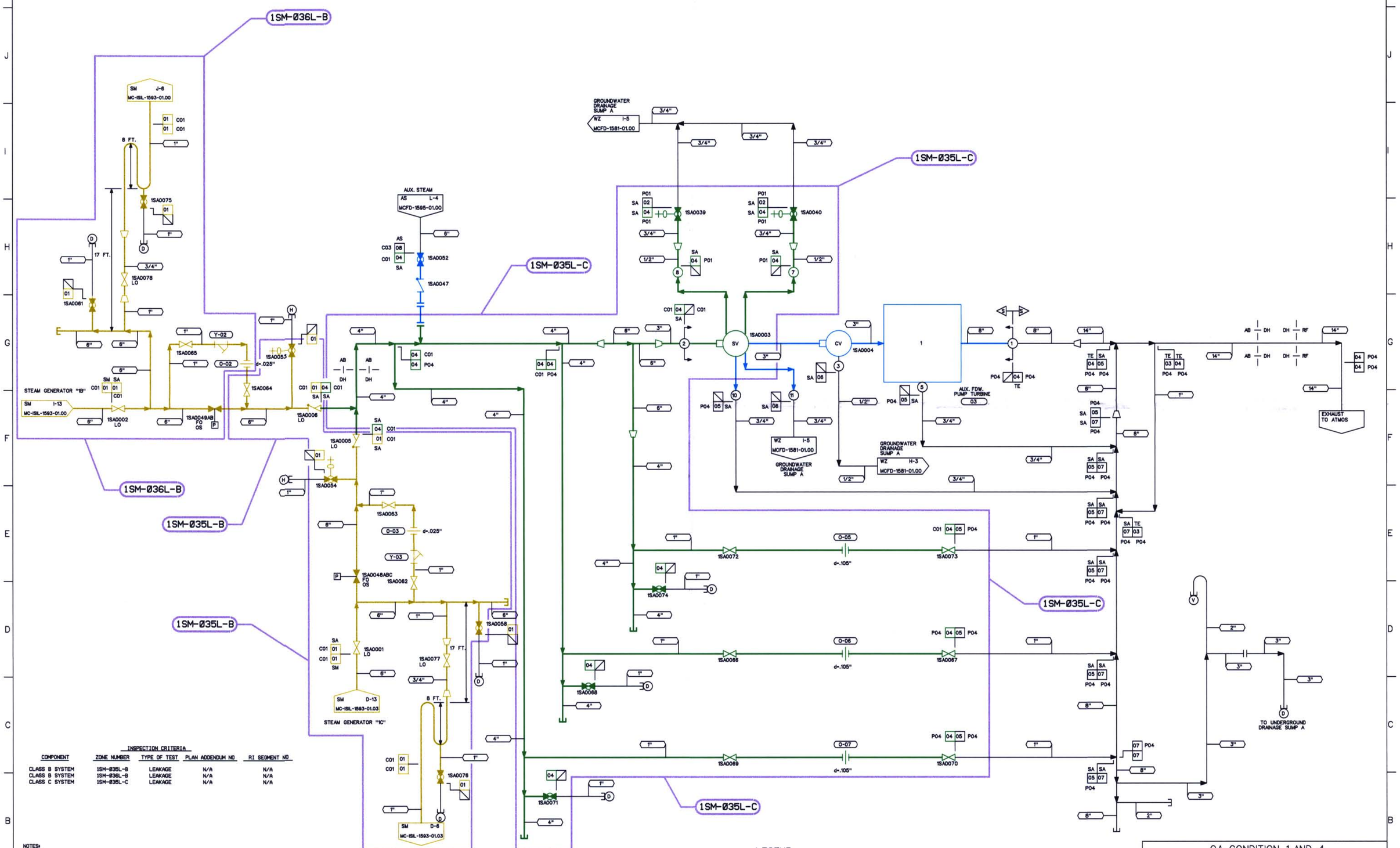

INSPECTION CRITERIA

COMPONENT	ZONE NUMBER	TYPE OF TEST	PLAN ADDENDUM NO	RI SEGMENT NO
CLASS B SYSTEM	1SM-036L-B	LEAKAGE	N/A	N/A
CLASS B SYSTEM	1SM-035L-B	LEAKAGE	N/A	N/A
CLASS C SYSTEM	1SM-035L-C	LEAKAGE	N/A	N/A

NOTES:

1. THE ISI EXEMPT BOUNDARIES SHOWN ON THIS DRAWING ARE EXEMPTED BECAUSE THEY SERVE NO SAFETY FUNCTION AS DETERMINED BY SITE ENGINEERING.

DESIGN PARAMETERS

LINE LISTING	PIPE SPEC.	PRESSURE	TEMPERATURE	CLASS	MATERIAL
AS08	PS 900.4	200 PSIG	390 F	F	CS
SA01	PS 900.2	1185 PSIG	567 F	B	CS
SA02	PS 900.4	1185 PSIG	567 F	G	CS
SA04	PS 900.3	1185 PSIG	567 F	C	CS
SA05	PS 150.4	150 PSIG	350 F	F	CS NOTE 1
SA06	PS 150.4	150 PSIG	350 F	G	CS
SA07	PS 151.4	150 PSIG	350 F	F	SS
SM01	PS 1500.5	1185 PSIG	567 F	B	CS
TE03	PS 150.4	150 PSIG	350 F	F	CS NOTE 1
TE04	PS 150.4	50 PSIG	300 F	F	CS

LEGEND

- ISI CLASS 1
- ISI CLASS 2
- ISI CLASS 3
- ISI EXEMPT
- ZONE BOUNDARY

THIS DRAWING IS FOR INSERVICE INSPECTION ONLY AND SHALL NOT BE USED FOR OTHER PURPOSES SUCH AS MAINTENANCE, MODIFICATION, OR REPAIRS. THIS DRAWING SHALL BE REVISED WHEN AS-BUILT CHANGES AFFECT THE INSERVICE INSPECTION BOUNDARIES AND DETAILS OF THE COMPONENTS/SYSTEMS SHOWN.

NO.	REVISIONS	DRN	DATE	CHKD	DATE	APPR	DATE
ORIG	RELEASED FOR ISI USE ONLY	TDM	5-8-01	JMB	5-7-01	RKR	5-9-01

WAIVED — CIVIL / ELEC. / MECH — INSPECTED

QA CONDITION 1 AND 4

DUKE POWER COMPANY
MCGUIRE NUCLEAR STATION UNIT 1

ASME SECTION XI
INSERVICE INSPECTION PRESSURE TEST BOUNDARY OF MAIN STEAM SUPPLY TO AUXILIARY EQUIPMENT SYSTEM (SA) TURBINE EXHAUST SYSTEM (TE)

DESIGNER TIM MYERS DATE 5-8-01 INSP WAIVED DATE —
DRAWN TIM MYERS DATE 5-8-01 INSP WAIVED DATE —
CHECKED JIM BOUGHMAN DATE 5-7-01 APPR R. KEVIN RHYNE DATE 5-9-01
SCALE DWG. NO. MC-ISIL-1593-01.02 REV 0

REFERENCE FLOW DIAGRAM MCFD-1593-01.02 REV. 3
ERN:MC009AW0

D-154