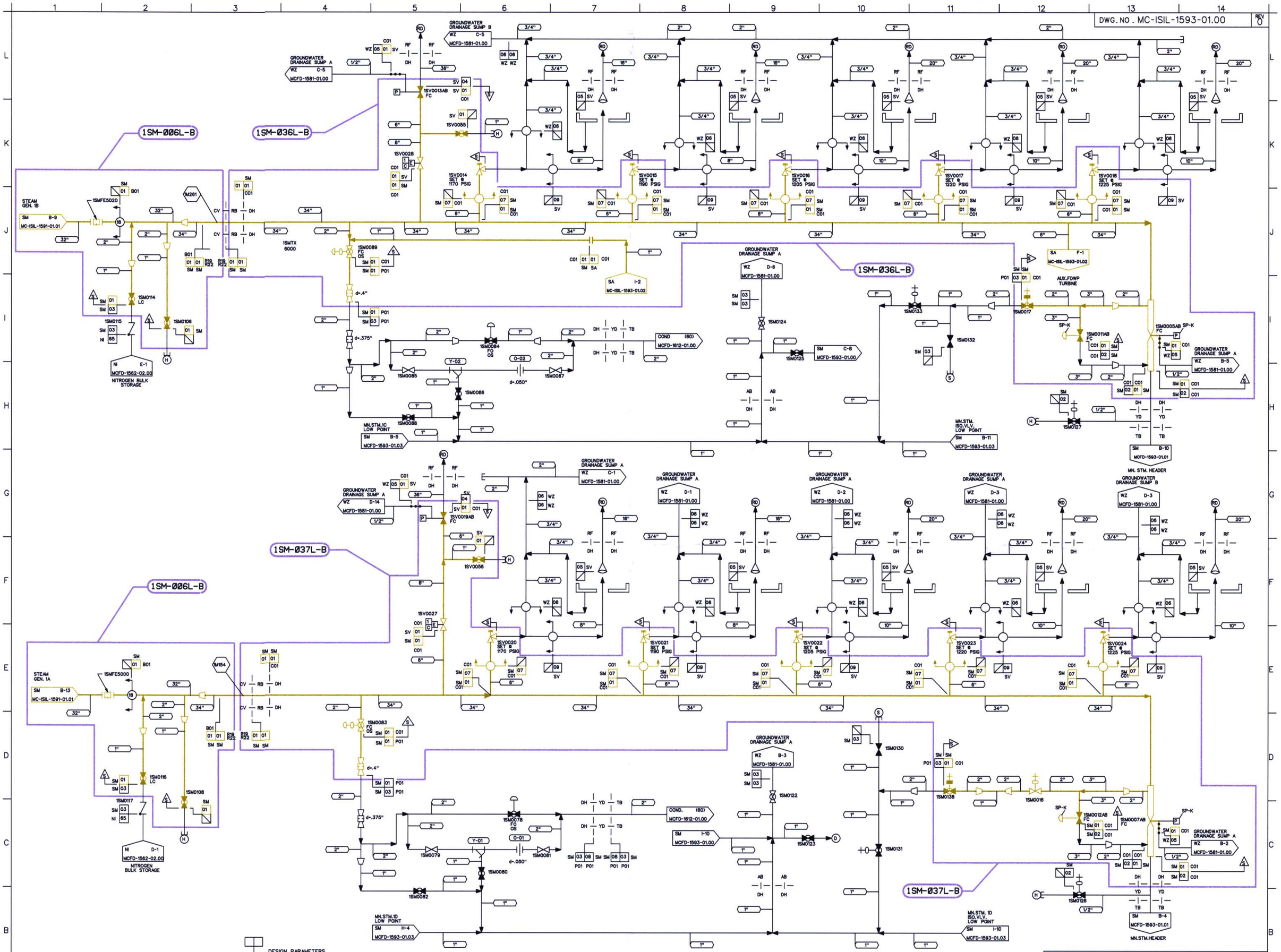

DESIGN PARAMETERS

LINE LISTING	PIPE SPEC.	PRESSURE	TEMPERATURE	CLASS	MATERIAL
N65	PS 150.4	60 PSIG	300 F	G	CS
SA01	PS 900.2	1185 PSIG	567 F	B	CS
SM01	PS 1500.5	1185 PSIG	567 F	B	CS
SM02	PS 1500.5	1185 PSIG	567 F	F	CS
SM03	PS 1500.5	1185 PSIG	567 F	G	CS
SM07	PS 900.2	1185 PSIG	567 F	B	CS
SM08	PS 1500.5	1185 PSIG	567 F	F	CS
SM1A	PS 1500.6	1185 PSIG	567 F		CS
SV01	PS 900.2	1185 PSIG	567 F	B	CS
SV04	PS 150.4	10 PSIG	300 F	F	CS
SV05	PS 150.4	60 PSIG	310 F	F	CS
SV09	PS 300.4	400 PSIG	450 F	F	CS
WZ05	TS 2701.1	50 PSIG	350 F	G	ST
WZ06	PS 150.4	50 PSIG	212 F	H	CS

INSPECTION CRITERIA

COMPONENT	ZONE NUMBER	TYPE OF TEST	PLAN ADDENDUM NO	RI SEGMENT NO
CLASS B SYSTEM	1SM-006L-B	LEAKAGE	N/A	N/A
CLASS B SYSTEM	1SM-036L-B	LEAKAGE	N/A	N/A
CLASS B SYSTEM	1SM-037L-B	LEAKAGE	N/A	N/A

LEGEND

- ISI CLASS 1
- ISI CLASS 2
- ISI CLASS 3
- ISI EXEMPT
- ZONE BOUNDARY

THIS DRAWING IS FOR INSERVICE INSPECTION ONLY AND SHALL NOT BE USED FOR OTHER PURPOSES SUCH AS MAINTENANCE, MODIFICATION, OR REPAIRS. THIS DRAWING SHALL BE REVISED WHEN AS-BUILT CHANGES AFFECT THE INSERVICE INSPECTION BOUNDARIES AND DETAILS OF THE COMPONENTS/SYSTEMS SHOWN.

NO.	REVISIONS	DRN	DATE	CHKD	DATE	APPR	DATE
ORIG	RELEASED FOR ISI USE ONLY	TDM	5-8-01	JMB	5-7-01	RKR	5-9-01

WAIVED — CIVIL, ELEC., MECH. — INSPECTED

QA CONDITION 1 AND 4

DUKE POWER COMPANY
MCGUIRE NUCLEAR STATION UNIT 1

ASME SECTION XI
INSERVICE INSPECTION PRESSURE TEST BOUNDARY OF
MAIN STEAM SYSTEM (SM)
MAIN STEAM VENT TO ATMOSPHERE (SV)

DESIGNER	TIM MYERS	DATE	5-8-01	INSP	WAIVED DATE —
DRAWN	TIM MYERS	DATE	5-8-01	INSP	WAIVED DATE —
CHECKED	JIM BOUGHMAN	DATE	5-7-01	APPR	R. KEVIN RHYNE DATE 5-9-01

SCALE — DWG. NO. MC-ISIL-1593-01.00 — REV 0

REFERENCE FLOW DIAGRAM MCFD-1593-01.00 REV. 11
ERN:MC009AWN

D-153