DWG. NO. MC-ISIL-1592-01.00 REV 0

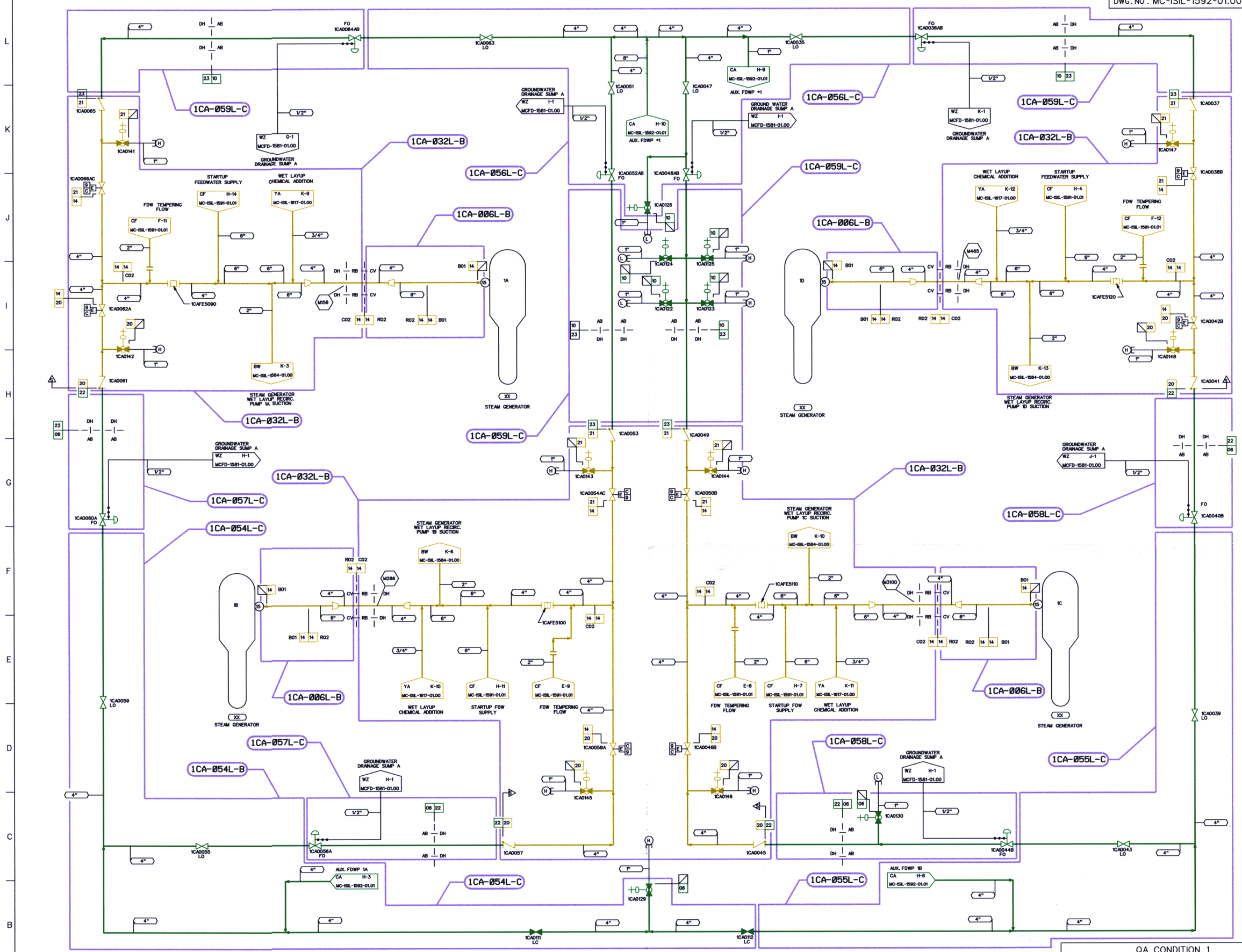

COMPONENT	ZONE NUMBER	INSPECTION CRITERIA: TYPE OF TEST	PLAN ADDENDUM NO	RI SEGMENT NO
CLASS B SYSTEM	1CA-006L-B	LEAKAGE	N/A	N/A
CLASS B SYSTEM	1CA-032L-B	LEAKAGE	N/A	N/A
CLASS C SYSTEM	1CA-054L-C	LEAKAGE	N/A	N/A
CLASS C SYSTEM	1CA-055L-C	LEAKAGE	N/A	N/A
CLASS C SYSTEM	1CA-056L-C	LEAKAGE	N/A	N/A
CLASS C SYSTEM	1CA-057L-C	LEAKAGE	N/A	N/A
CLASS C SYSTEM	1CA-058L-C	LEAKAGE	N/A	N/A
CLASS C SYSTEM	1CA-059L-C	LEAKAGE	N/A	N/A

DESIGN PARAMETERS

LINE LISTING	PIPE SPEC.	PRESSURE	TEMPERATURE	CLASS	MATERIAL
CA06	PS 900.3	1665 PSIG	160 F	C	CS
CA10	PS 900.3	1730 PSIG	160 F	C	CS
CA14	PS 900.2	1344 PSIG	567 F	B	CS
CA20	PS 900.2	1665 PSIG	567 F	B	CS
CA21	PS 1500.2	1730 PSIG	567 F	B	CS
CA22	PS 900.3	1665 PSIG	275 F	C	CS
CA23	PS 900.3	1730 PSIG	275 F	C	CS
WZ04	TS 2701.1	50 PSIG	160 F	G	ST

LEGEND

- ISI CLASS 1
- ISI CLASS 2
- ISI CLASS 3
- ISI EXEMPT
- ZONE BOUNDARY

THIS DRAWING IS FOR INSERVICE INSPECTION ONLY AND SHALL NOT BE USED FOR OTHER PURPOSES SUCH AS MAINTENANCE, MODIFICATION, OR REPAIRS. THIS DRAWING SHALL BE REVISED WHEN AS-BUILT CHANGES AFFECT THE INSERVICE INSPECTION BOUNDARIES AND DETAILS OF THE COMPONENTS/SYSTEMS SHOWN.

NO.	REVISIONS	DRN	DATE	CHKD	DATE	APPR	DATE
ORIG	RELEASED FOR ISI USE ONLY	TDM	5-8-01	JMB	5-7-01	RKR	5-9-01

WAIVED — INSPECTED: CIVIL, ELEC, MECH

QA CONDITION 1

DUKE POWER COMPANY
MCGUIRE NUCLEAR STATION UNIT 1

ASME SECTION XI
INSERVICE INSPECTION PRESSURE TEST BOUNDARY OF AUXILIARY FEEDWATER SYSTEM
(CA)

DESIGNER	TIM MYERS	DATE 5-8-01	INSP.	WAIVED	DATE —
DRAWN	TIM MYERS	DATE 5-8-01	INSP.	WAIVED	DATE —
CHECKED	JIM BOUGHMAN	DATE 5-7-01	APPR.	R. KEVIN RHYNE	DATE 5-9-01

SCALE — DWG. NO. MC-ISIL-1592-01.00 — REV 0

REFERENCE FLOW DIAGRAM MCFD-1592-01.00 REV. 7

ERN: MC009AWL

D-151