DWG. NO. MC-ISIL-1591-01.01 REV 0

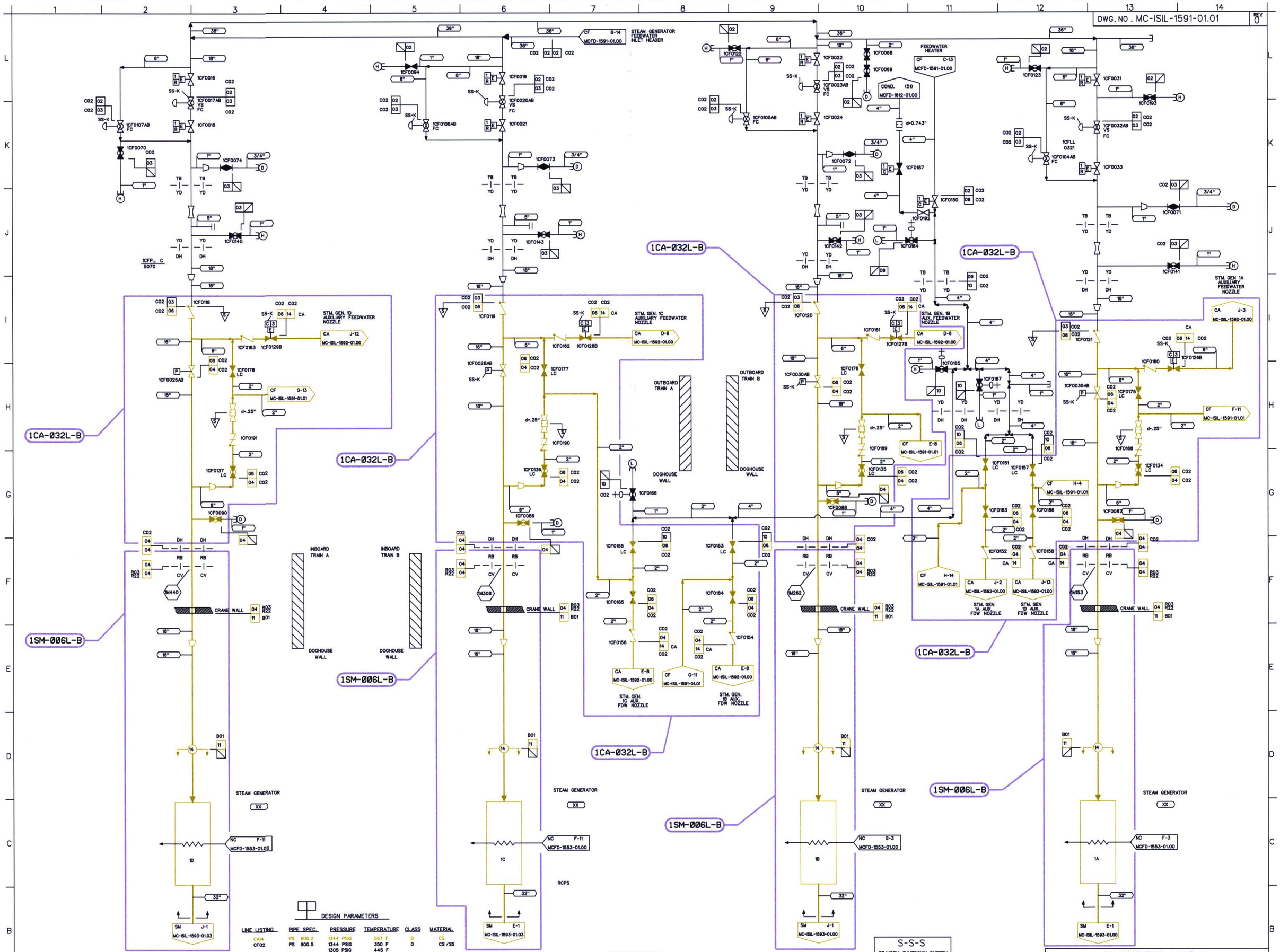

DESIGN PARAMETERS

LINE LISTING	PIPE SPEC.	PRESSURE	TEMPERATURE	CLASS	MATERIAL
CA14	PS 900.2	1344 PSIG	567 F	B	CS
CF02	PS 900.5	1344 PSIG	350 F	G	CS /SS
		1305 PSIG	445 F		
CF03	PS 900.5	1344 PSIG	350 F	F	CS /SS
		1305 PSIG	445 F		
CF04	PS 900.5	1150 PSIG	567 F	B	CS
		1185 PSIG	545 F		
CF06	PS 900.5	1344 PSIG	350 F	B	CS
		1305 PSIG	445 F		
CF09	PS 900.5	1344 PSIG	350 F	G	CS
		1305 PSIG	445 F		
CF10	PS 900.5	1344 PSIG	350 F	F	CS
		1305 PSIG	445 F		
		1185 PSIG	545 F		
		1150 PSIG	567 F		
CF11	PS 900.7	1185 PSIG	567 F	B	CS
CF3A	PS 900.6	1240 PSIG	445 F	(NOTE 1)	CS
CF4A	PS 900.6	1185 PSIG	445 F	(NOTE 2)	CS

INSPECTION CRITERIA

COMPONENT	ZONE NUMBER	TYPE OF TEST	PLAN ADDENDUM NO	RI SEGMENT NO
CLASS B SYSTEM	1CA-032L-B	LEAKAGE	N/A	N/A
CLASS B SYSTEM	1SM-006L-B	LEAKAGE	N/A	N/A

LEGEND

- ISI CLASS 1
- ISI CLASS 2
- ISI CLASS 3
- ISI EXEMPT
- ZONE BOUNDARY

THIS DRAWING IS FOR INSERVICE INSPECTION ONLY AND SHALL NOT BE USED FOR OTHER PURPOSES SUCH AS MAINTENANCE, MODIFICATION, OR REPAIRS. THIS DRAWING SHALL BE REVISED WHEN AS-BUILT CHANGES AFFECT THE INSERVICE INSPECTION BOUNDARIES AND DETAILS OF THE COMPONENTS/SYSTEMS SHOWN.

S-S-S
STANDBY SHUTDOWN SYSTEM

ORIG	RELEASED FOR ISI USE ONLY	TDM	5-9-01	JMB	5-9-01	RKR	5-9-01	W A I V E D		
NO.	REVISIONS	DRN	DATE	CHKD	DATE	APPR	DATE	CIVIL	ELEC.	MECH.
								INSPECTED		

QA CONDITION 1 AND 4

DUKE POWER COMPANY
MCGUIRE NUCLEAR STATION UNIT 1

ASME SECTION XI
INSERVICE INSPECTION PRESSURE TEST BOUNDARY OF FEEDWATER SYSTEM
(CF)

DESIGNER	TIM MYERS	DATE 5-9-01	INSP.	WAIVED	DATE —
DRAWN	TIM MYERS	DATE 5-9-01	INSP.	WAIVED	DATE —
CHECKED	JIM BOUGHMAN	DATE 5-9-01	APPR.	R. KEVIN RHYNE	DATE 5-9-01
SCALE	DWG. NO. MC-ISIL-1591-01.01				REV. 0

REFERENCE FLOW DIAGRAM MCFD-1591-01.01 REV. 13
ERN: MC009AWK

D-150