DWG. NO. MC-ISIL-1584-01.00 REV 0

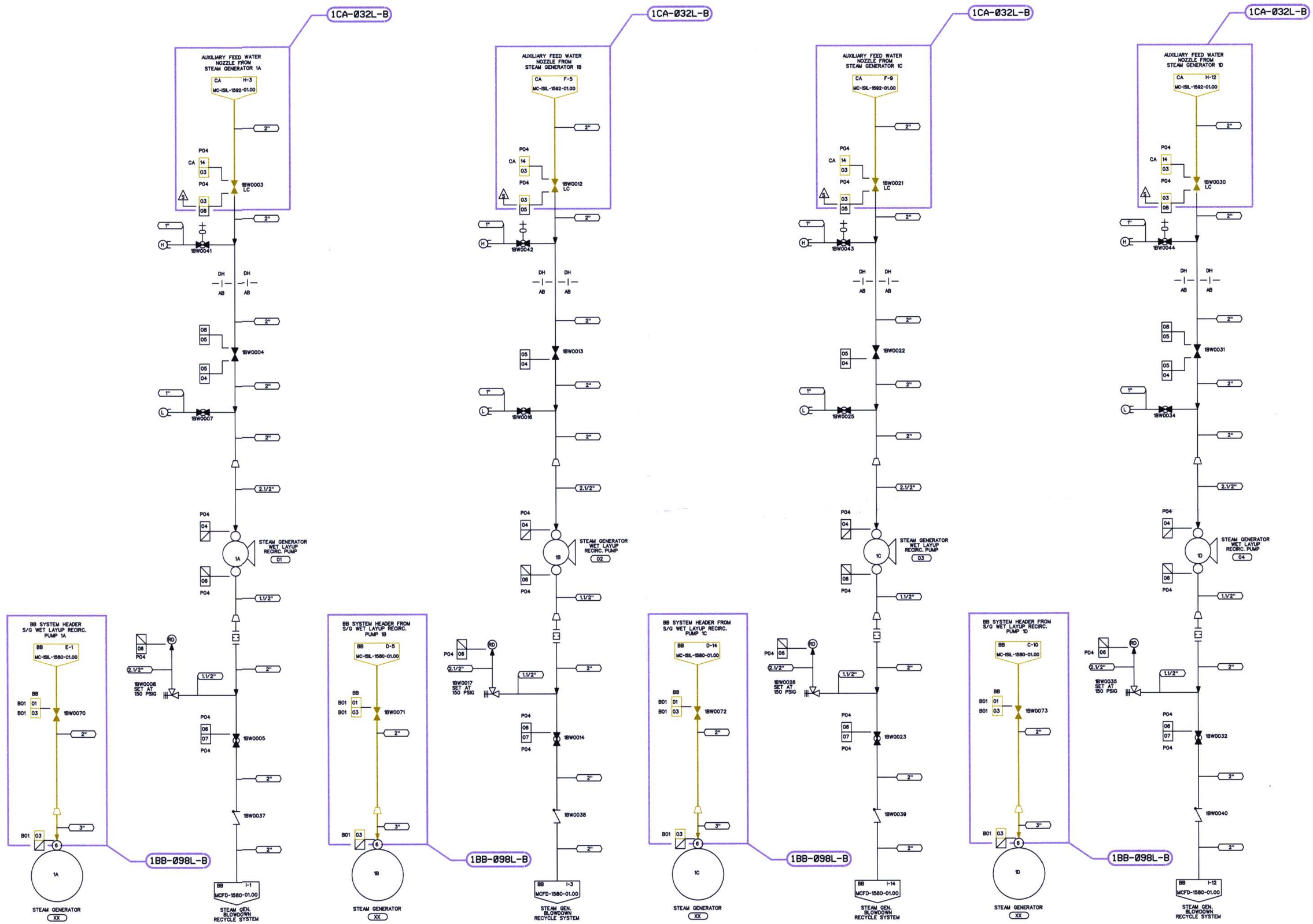

S-S-S
STANDBY SHUTDOWN SYSTEM

LEGEND

- ISI CLASS 1
- ISI CLASS 2
- ISI CLASS 3
- ISI EXEMPT
- ZONE BOUNDARY

INSPECTION CRITERIA

COMPONENT	ZONE NUMBER	TYPE OF TEST	PLAN ADDENDUM NO	RI SEGMENT NO
CLASS C SYSTEM	1BB-098L-B	LEAKAGE	N/A	N/A
CLASS C SYSTEM	1CA-032L-B	LEAKAGE	N/A	N/A

DESIGN PARAMETERS

LINE LISTING	PIPE SPEC.	PRESSURE	TEMPERATURE	CLASS	MATERIAL
BB01	PS 1501.2	1185 PSIG	567 F	B	SS
BW03	PS 900.2	1185 PSIG	567 F	B	CS
BW04	PS 150.4	150 PSIG	250 F	G	CS
BW05	PS 900.4	1185 PSIG	250 F	G	CS
BW06	PS 150.4	150 PSIG	250 F	G	CS
BW07	PS 900.4	1185 PSIG	250 F	G	CS
BW08	PS 901.4	1185 PSIG	250 F	G	SS
CA14	PS 900.2	1344 PSIG	567 F	B	CS

THIS DRAWING IS FOR INSERVICE INSPECTION ONLY AND SHALL NOT BE USED FOR OTHER PURPOSES SUCH AS MAINTENANCE, MODIFICATION, OR REPAIRS. THIS DRAWING SHALL BE REVISED WHEN AS-BUILT CHANGES AFFECT THE INSERVICE INSPECTION BOUNDARIES AND DETAILS OF THE COMPONENTS/SYSTEMS SHOWN.

NO.	REVISIONS	DRN	DATE	CHKD	DATE	APPR	DATE	CIVIL	ELEC.	MECH
ORIG	RELEASED FOR ISI USE ONLY	TDM	5-8-01	JMB	5-7-01	RKR	5-9-01	W A I V E D		

INSPECTED

QA CONDITION 1

DUKE POWER COMPANY
MCGUIRE NUCLEAR STATION UNIT 1

ASME SECTION XI
INSERVICE INSPECTION PRESSURE TEST BOUNDARY OF STEAM GENERATOR WET LAYUP RECIRCULATION SYSTEM (BW)

DESIGNER	TIM MYERS	DATE 5-8-01	INSP	WAIVED	DATE —
DRAWN	TIM MYERS	DATE 5-8-01	INSP	WAIVED	DATE —
CHECKED	JIM BOUGHMAN	DATE 5-7-01	APPR	R. KEVIN RHYNE	DATE 5-9-01

SCALE — DWG. NO. MC-ISIL-1584-01.00 REV 0

REFERENCE FLOW DIAGRAM MCFD-1584-01.00 REV. 1
ERN: MC009AWJ

D-149