DWG. NO. MC-ISIL-1618-04.00 REV 0

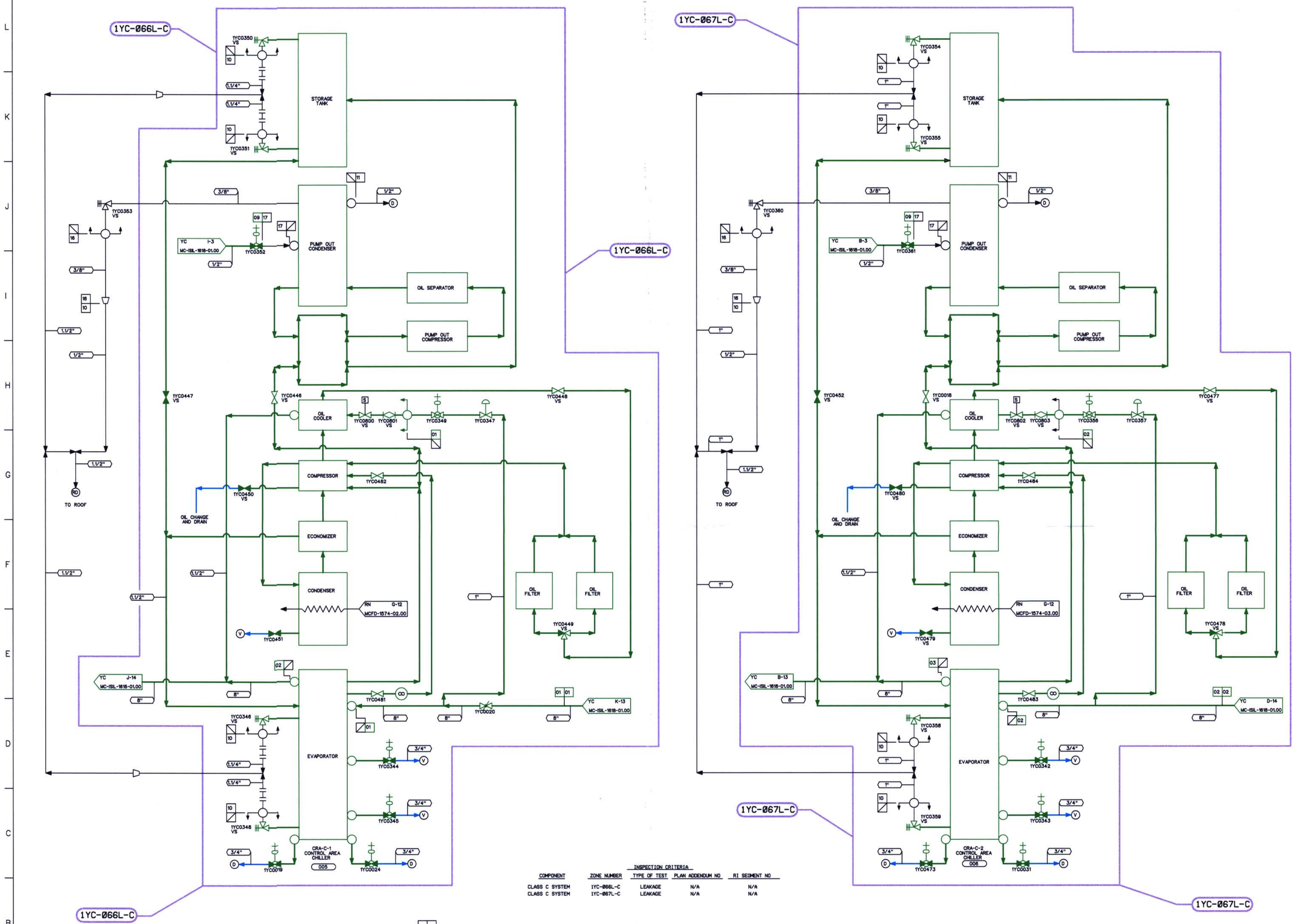

COMPONENT	ZONE NUMBER	INSPECTION CRITERIA TYPE OF TEST	PLAN ADDENDUM NO	RI SEGMENT NO
CLASS C SYSTEM	1YC-066L-C	LEAKAGE	N/A	N/A
CLASS C SYSTEM	1YC-067L-C	LEAKAGE	N/A	N/A

DESIGN PARAMETERS

LINE LISTING	PIPE SPEC.	PRESSURE	TEMPERATURE	CLASS	MATERIAL
YC01	PS 150.3	110 PSIG	100 F	C	CS
YC02	PS 150.3	110 PSIG	100 F	C	CS
YC03	PS 150.3	110 PSIG	100 F	C	CS
YC09	PS 151.3	110 PSIG	100 F	C	SS
YC10	PS 151.4	275 PSIG	100 F	F	SS
YC11	PS 151.4	110 PSIG	100 F	F	SS
YC16	PS 165	275 PSIG	100 F	Q	CT
YC17	PS 151.4	110 PSIG	100 F	F	SS

LEGEND

- ISI CLASS 1
- ISI CLASS 2
- ISI CLASS 3
- ISI EXEMPT
- ZONE BOUNDARY

NOTES:

1. THE ISI EXEMPT BOUNDARIES SHOWN ON THIS DRAWING ARE EXEMPTED BECAUSE THEY SERVE NO SAFETY FUNCTION AS DETERMINED BY SITE ENGINEERING.

THIS DRAWING IS FOR INSERVICE INSPECTION ONLY AND SHALL NOT BE USED FOR OTHER PURPOSES SUCH AS MAINTENANCE, MODIFICATION, OR REPAIRS. THIS DRAWING SHALL BE REVISED WHEN AS-BUILT CHANGES AFFECT THE INSERVICE INSPECTION BOUNDARIES AND DETAILS OF THE COMPONENTS/SYSTEMS SHOWN.

NO.	REVISIONS	DRN	DATE	CHKD	DATE	APPR	DATE	CIVIL	ELEC.	MECH
ORIG	RELEASED FOR ISI USE ONLY	TDM	5-8-01	JMB	5-7-01	RKR	5-9-01	WAIVED INSPECTED		

QA CONDITION 1

DUKE POWER COMPANY
MCGUIRE NUCLEAR STATION UNIT 1 AND 2

ASME SECTION XI
INSERVICE INSPECTION PRESSURE TEST BOUNDARY OF CONTROL AREA
CHILLED WATER SYSTEM (YC)

DESIGNER TIM MYERS DATE 5-8-01 INSP WAIVED DATE
DRAWN TIM MYERS DATE 5-8-01 INSP WAIVED DATE
CHECKED JIM BOUGHMAN DATE 5-7-01 APPR R. KEVIN RHYNE DATE 5-9-01
SCALE DWG .NO . MC-ISIL-1618-04.00 REV 0

REFERENCE FLOW DIAGRAM MCFD-1618-04.00 REV. 2
ERN: MC009AXA

D-175