DWG. NO. MC-ISIL-1618-01.00 REV 0

COMPONENT	ZONE NUMBER	INSPECTION CRITERIA TYPE OF TEST	PLAN ADDENDUM NO	RI SEGMENT NO
CLASS C SYSTEM	1YC-066L-C	LEAKAGE	N/A	N/A
CLASS C SYSTEM	1YC-067L-C	LEAKAGE	N/A	N/A

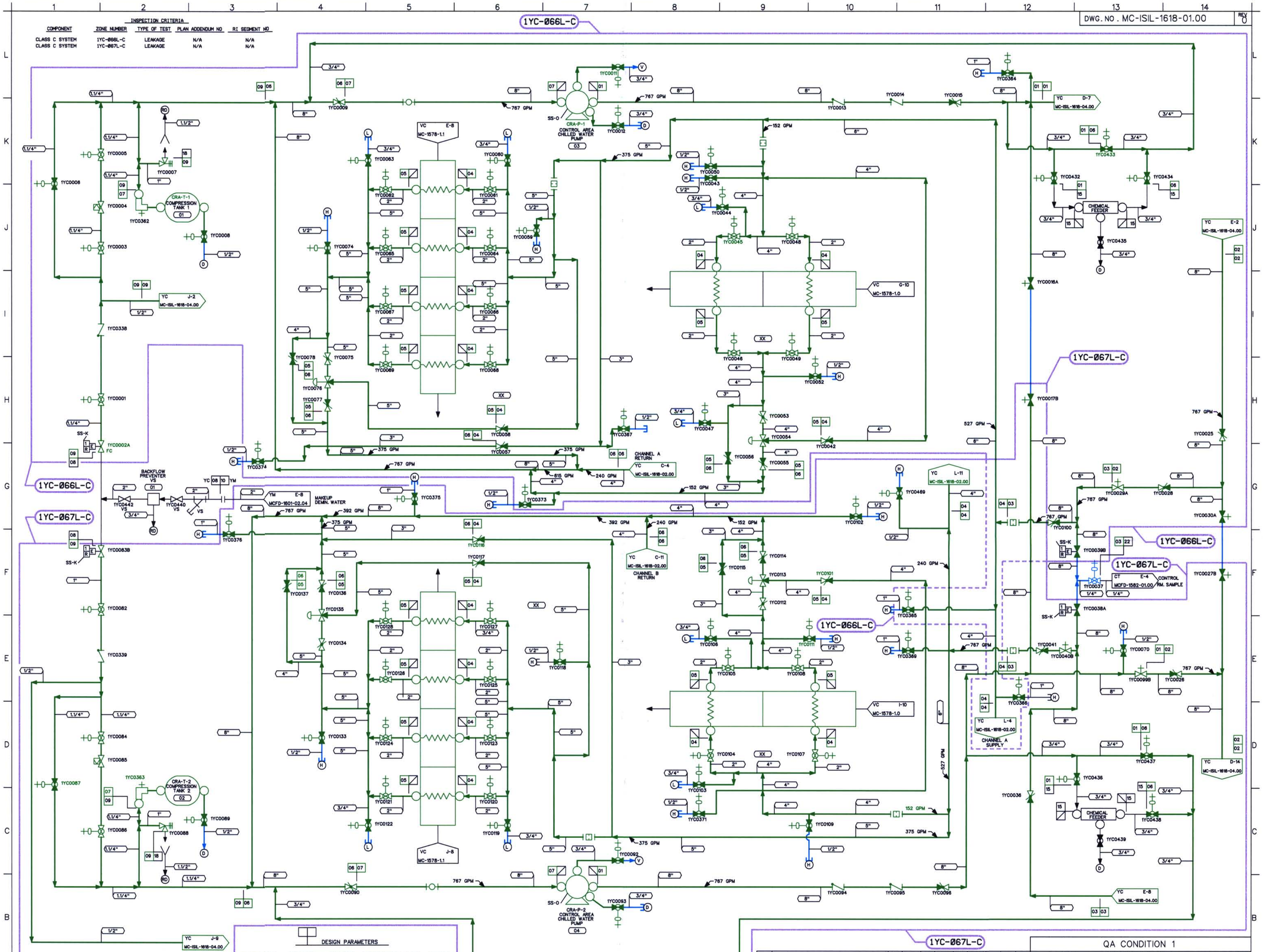

DESIGN PARAMETERS

LINE LISTING	PIPE SPEC.	PRESSURE	TEMPERATURE	CLASS	MATERIAL
CT22	TS 2701.1	110 PSIG	95 F	H	ST
YC01	PS 150.3	110 PSIG	100 F	C	CS
YC02	PS 150.3	110 PSIG	100 F	C	CS
YC03	PS 150.3	110 PSIG	100 F	C	CS
YC04	PS 150.3	110 PSIG	100 F	C	CS
YC05	PS 150.3	110 PSIG	100 F	C	CS
YC06	PS 150.3	110 PSIG	100 F	C	CS
YC07	PS 150.3	110 PSIG	100 F	C	CS
YC08	PS 151.4	110 PSIG	100 F	G	SS
YC09	PS 151.3	110 PSIG	100 F	C	SS
YC15	PS 150.4	110 PSIG	100 F	F	CS
YC18	PS 151.4	ATMOS	AMBIENT	G	SS
YM10	PS 157	150 PSIG	120 F	H	AL

NOTES:

1. THE ISI EXEMPT BOUNDARIES SHOWN ON THIS DRAWING ARE EXEMPTED BECAUSE THEY SERVE NO SAFETY FUNCTION AS DETERMINED BY SITE ENGINEERING.

REFERENCE FLOW DIAGRAM
MCFD-1618-01.00 REV. 1
ERN:MC009AX8

LEGEND

- ISI CLASS 1
- ISI CLASS 2
- ISI CLASS 3
- ISI EXEMPT
- ZONE BOUNDARY

THIS DRAWING IS FOR INSERVICE INSPECTION ONLY AND SHALL NOT BE USED FOR OTHER PURPOSES SUCH AS MAINTENANCE, MODIFICATION, OR REPAIRS. THIS DRAWING SHALL BE REVISED WHEN AS-BUILT CHANGES AFFECT THE INSERVICE INSPECTION BOUNDARIES AND DETAILS OF THE COMPONENTS/SYSTEMS SHOWN.

NO.	REVISIONS	DRN	DATE	CHKD	DATE	APPR	DATE	CIVIL	ELEC.	MECH
ORIG	RELEASED FOR ISI USE ONLY	TDM	5-8-01	JMB	5-7-01	RKR	5-9-01	W A I V E D		

INSPECTED

QA CONDITION 1

DUKE POWER COMPANY
MCGUIRE NUCLEAR STATION UNIT 1 AND 2

ASME SECTION XI
INSERVICE INSPECTION PRESSURE TEST BOUNDARY OF CONTROL AREA CHILLED WATER SYSTEM (YC)

DESIGNER TIM MYERS DATE 5-8-01 INSP WAIVED DATE
DRAWN TIM MYERS DATE 5-8-01 INSP WAIVED DATE
CHECKED JIM BOUGHMAN DATE 5-7-01 APPR R. KEVIN RHYNE DATE 5-9-01
SCALE DWG.NO. MC-ISIL-1618-01.00 REV 0

D-173