DWG. NO. MC-ISIL-1576-01.00 REV. 0

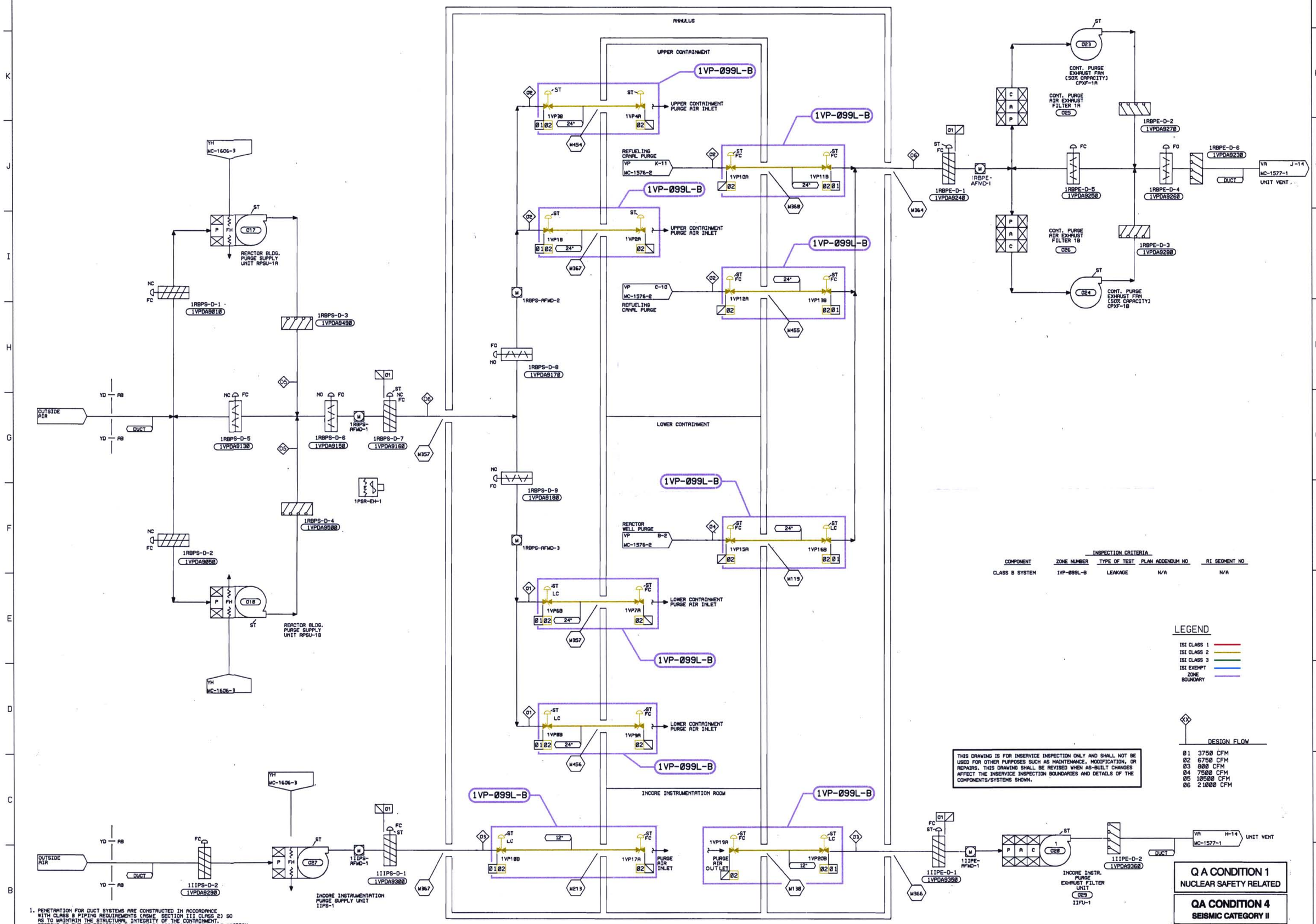


| INSPECTION CRITERIA | | | | |
|---|---|---|---|---|
| COMPONENT | ZONE NUMBER | TYPE OF TEST | PLAN ADDENDUM NO | RI SEGMENT NO |
| CLASS B SYSTEM | 1VP-099L-B | LEAKAGE | N/A | N/A |

LEGEND

- ISI CLASS 1
- ISI CLASS 2
- ISI CLASS 3
- ISI EXEMPT
- ZONE BOUNDARY

| DESIGN FLOW | |
|---|---|
| 01 | 3750 CFM |
| 02 | 6750 CFM |
| 03 | 800 CFM |
| 04 | 7500 CFM |
| 05 | 10500 CFM |
| 06 | 21000 CFM |

THIS DRAWING IS FOR INSERVICE INSPECTION ONLY AND SHALL NOT BE USED FOR OTHER PURPOSES SUCH AS MAINTENANCE, MODIFICATION, OR REPAIRS. THIS DRAWING SHALL BE REVISED WHEN AS-BUILT CHANGES AFFECT THE INSERVICE INSPECTION BOUNDARIES AND DETAILS OF THE COMPONENTS/SYSTEMS SHOWN.

**Q A CONDITION 1**
**NUCLEAR SAFETY RELATED**

**QA CONDITION 4**
**SEISMIC CATEGORY II**

1. PENETRATION FOR DUCT SYSTEMS ARE CONSTRUCTED IN ACCORDANCE WITH CLASS B PIPING REQUIREMENTS (ASME SECTION III CLASS 2) SO AS TO MAINTAIN THE STRUCTURAL INTEGRITY OF THE CONTAINMENT. TESTING OF THE PENETRATIONS SHALL BE IN ACCORDANCE WITH ASME SECTION III, DIVISION 1, SUBSECTION NC-6300. DESIGN PRESSURE SHALL BE SAME AS THE CONTAINMENT PRESSURE, 15 PSIG, AS GIVEN IN DOCUMENT ENTITLED "MCGUIRE NUCLEAR STATION DESCRIPTION OF LEAKRATE TEST INSTRUMENTATION SYSTEM, PARAGRAPH 3.0". DESIGN TEMPERATURE WILL BE 250°F.

DESIGN PARAMETERS

| LINE LISTING | PRESSURE | TEMP | CLASS | MATERIAL | PIPE SPEC |
|---|---|---|---|---|---|
| 01 | — | — | H | — | — |
| 02 | 15 PSIG | 250°F | B | CS | PS 150.9 (SEE NOTE 1) |

| NO. | REVISIONS | DRN | DATE | CHKD | DATE | APPR | DATE |
|---|---|---|---|---|---|---|---|
| ORIG. | RELEASED FOR ISI USE ONLY | TDM | 5-9-01 | JMB | 5-9-01 | RKR | 5-9-01 |

W A I V E D — CIVIL, ELEC., MECH. — INSPECTED

DUKE POWER COMPANY
MCGUIRE NUCLEAR STATION UNIT 1

ASME SECTION XI
INSERVICE INSPECTION PRESSURE TEST BOUNDARY OF CONTAINMENT PURGE VENTILATION SYSTEM (VP)

DESIGNER TIM MYERS DATE 5-9-01 INSP. WAIVED DATE —
DRAWN TIM MYERS DATE 5-9-01 INSP. WAIVED DATE —
CHECKED JIM BOUGHMAN DATE 5-9-01 APPR. R. KEVIN RHYNE DATE 5-9-01
SCALE DWG. NO. MC-ISIL-1576-01.00 REV. 0

REFERENCE FLOW DIAGRAM MC-1576-01.00 REV. 28
ERN:MC009AWI

D-146