DWG. NO. MC-ISIL-1605-01.03 REV 0

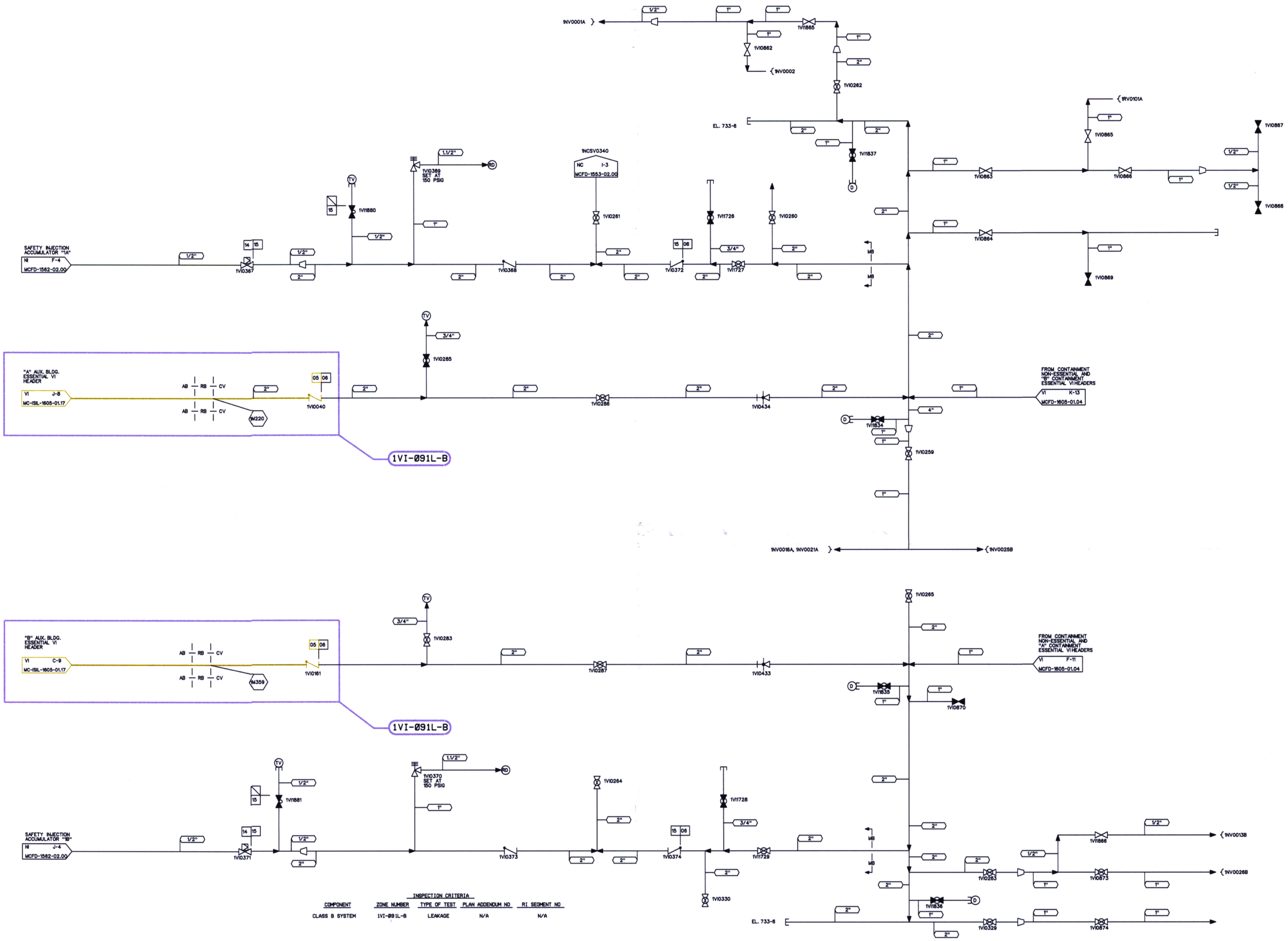

COMPONENT	ZONE NUMBER	TYPE OF TEST	PLAN ADDENDUM NO.	RI SEGMENT NO.
CLASS B SYSTEM	1VI-091L-B	LEAKAGE	N/A	N/A

INSPECTION CRITERIA

DESIGN PARAMETERS

LINE LISTING	PIPE SPEC.	PRESSURE	TEMPERATURE	CLASS	MATERIAL
VI05	PS 151.2	115 PSIG	250 F	B	SS
VI06	PS 151.4	115 PSIG	120 F	G	SS
VI14	PS 601.4	700 PSIG	120 F	F	SS
VI15	PS 151.4	150 PSIG	120 F	F	SS

LEGEND

- ISI CLASS 1
- ISI CLASS 2
- ISI CLASS 3
- ISI EXEMPT
- ZONE BOUNDARY

THIS DRAWING IS FOR INSERVICE INSPECTION ONLY AND SHALL NOT BE USED FOR OTHER PURPOSES SUCH AS MAINTENANCE, MODIFICATION, OR REPAIRS. THIS DRAWING SHALL BE REVISED WHEN AS-BUILT CHANGES AFFECT THE INSERVICE INSPECTION BOUNDARIES AND DETAILS OF THE COMPONENTS/SYSTEMS SHOWN.

NO.	REVISIONS	DRN	DATE	CHKD	DATE	APPR	DATE
ORIG	RELEASED FOR ISI USE ONLY	TDM	5-8-01	JMB	5-7-01	RKR	5-9-01

W A I V E D — CIVIL ELEC. MECH — INSPECTED

QA CONDITION 1 AND 4

DUKE POWER COMPANY
MCGUIRE NUCLEAR STATION UNIT 1

ASME SECTION XI
INSERVICE INSPECTION PRESSURE TEST BOUNDARY OF INSTRUMENT AIR SYSTEM
(VI)

DESIGNER	TIM MYERS	DATE 5-8-01	INSP	WAIVED	DATE —
DRAWN	TIM MYERS	DATE 5-8-01	INSP	WAIVED	DATE —
CHECKED	JIM BOUGHMAN	DATE 5-7-01	APPR	R. KEVIN RHYNE	DATE 5-9-01
SCALE	DWG. NO. MC-ISIL-1605-01.03				REV 0

REFERENCE FLOW DIAGRAM
MCFD-1605-01.03 REV. 8
ERN:MC009AWU

D-160