DWG. NO. MC-ISIL-1609-03.00 REV 0

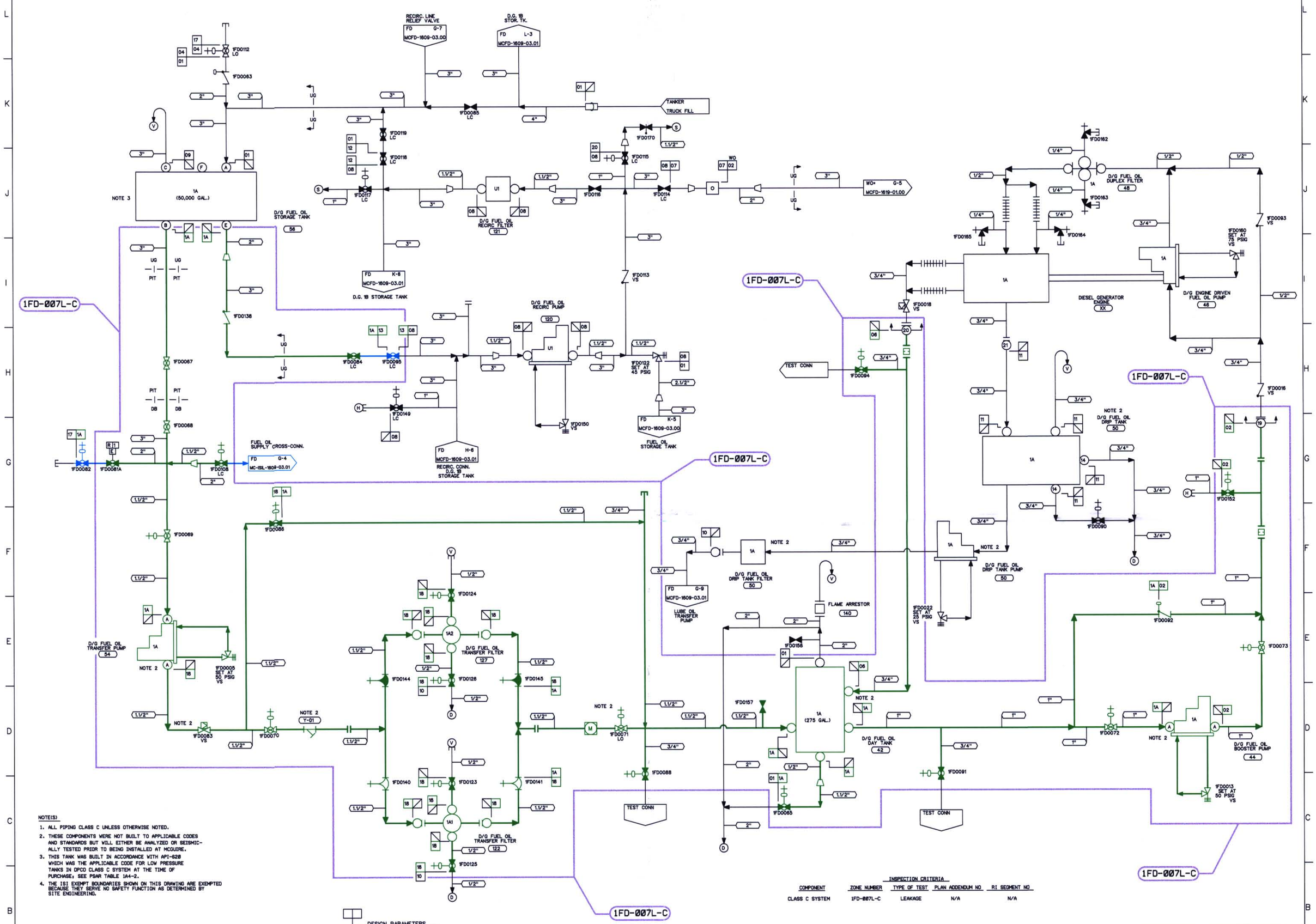

NOTE(S)

1. ALL PIPING CLASS C UNLESS OTHERWISE NOTED.
2. THESE COMPONENTS WERE NOT BUILT TO APPLICABLE CODES AND STANDARDS BUT WILL EITHER BE ANALYZED OR SEISMIC-ALLY TESTED PRIOR TO BEING INSTALLED AT MCGUIRE.
3. THIS TANK WAS BUILT IN ACCORDANCE WITH API-620 WHICH WAS THE APPLICABLE CODE FOR LOW PRESSURE TANKS IN DPCO CLASS C SYSTEM AT THE TIME OF PURCHASE; SEE PSAR TABLE 1A4-2.
4. THE ISI EXEMPT BOUNDARIES SHOWN ON THIS DRAWING ARE EXEMPTED BECAUSE THEY SERVE NO SAFETY FUNCTION AS DETERMINED BY SITE ENGINEERING.

INSPECTION CRITERIA

COMPONENT	ZONE NUMBER	TYPE OF TEST	PLAN ADDENDUM NO	RI SEGMENT NO
CLASS C SYSTEM	1FD-007L-C	LEAKAGE	N/A	N/A

DESIGN PARAMETERS

LINE LISTING	PIPE SPEC.	PRESSURE	TEMPERATURE	CLASS	MATERIAL
FD01	PS 151.4	0 PSIG	90 F	F	SS
FD02	PS 151.3	50 PSIG	90 F	C	SS
FD04	PS 151.4	100 PSIG	90 F	F	SS
FD06	PS 151.3	30 PSIG	90 F	C	SS
FD07	PS 150.4	30 PSIG	90 F	G	CS
FD08	PS 151.4	45 PSIG	90 F	G	SS
FD09	PS 150.4	ATMOS	90 F	F	CS
FD10	PS 150.4	30 PSIG	90 F	G	CS
FD11	PS 151.4	12 PSIG	90 F	G	SS
FD12	PS 151.4	45 PSIG	90 F	F	SS
FD13	PS 151.3	45 PSIG	90 F	C	SS
FD17	PS 151.4	30 PSIG	120 F	G	SS
FD18	PS 151.3	55 PSIG	90 F	C	SS
FD1A	PS 151.3	30 PSIG	90 F	C	SS
WO02	PS 150.4	30 PSIG	170 F	G	CS

LEGEND

- ISI CLASS 1
- ISI CLASS 2
- ISI CLASS 3
- ISI EXEMPT
- ZONE BOUNDARY

THIS DRAWING IS FOR INSERVICE INSPECTION ONLY AND SHALL NOT BE USED FOR OTHER PURPOSES SUCH AS MAINTENANCE, MODIFICATION, OR REPAIRS. THIS DRAWING SHALL BE REVISED WHEN AS-BUILT CHANGES AFFECT THE INSERVICE INSPECTION BOUNDARIES AND DETAILS OF THE COMPONENTS/SYSTEMS SHOWN.

NO.	REVISIONS	DRN	DATE	CHKD	DATE	APPR	DATE	CIVIL	ELEC.	MECH.
ORIG	RELEASED FOR ISI USE ONLY	TDM	5-8-01	JMB	5-7-01	RKR	5-9-01	W A I V E D		

INSPECTED

QA CONDITION 1 AND 4

DUKE POWER COMPANY
MCGUIRE NUCLEAR STATION UNIT 1

ASME SECTION XI
INSERVICE INSPECTION PRESSURE TEST BOUNDARY OF DIESEL GENERATOR ENGINE 1A
FUEL OIL SYSTEM (FD)

DESIGNER TIM MYERS DATE 5-8-01 INSP. WAIVED DATE —
DRAWN TIM MYERS DATE 5-8-01 INSP. WAIVED DATE —
CHECKED JIM BOUGHMAN DATE 5-7-01 APPR. R. KEVIN RHYNE DATE 5-9-01
SCALE DWG. NO. MC-ISIL-1609-03.00 REV 0

REFERENCE FLOW DIAGRAM MCFD-1609-03.00 REV. 11
ERN:MC009AX4

D-169