DWG. NO. MC-ISIL-1604-03.00 REV 0

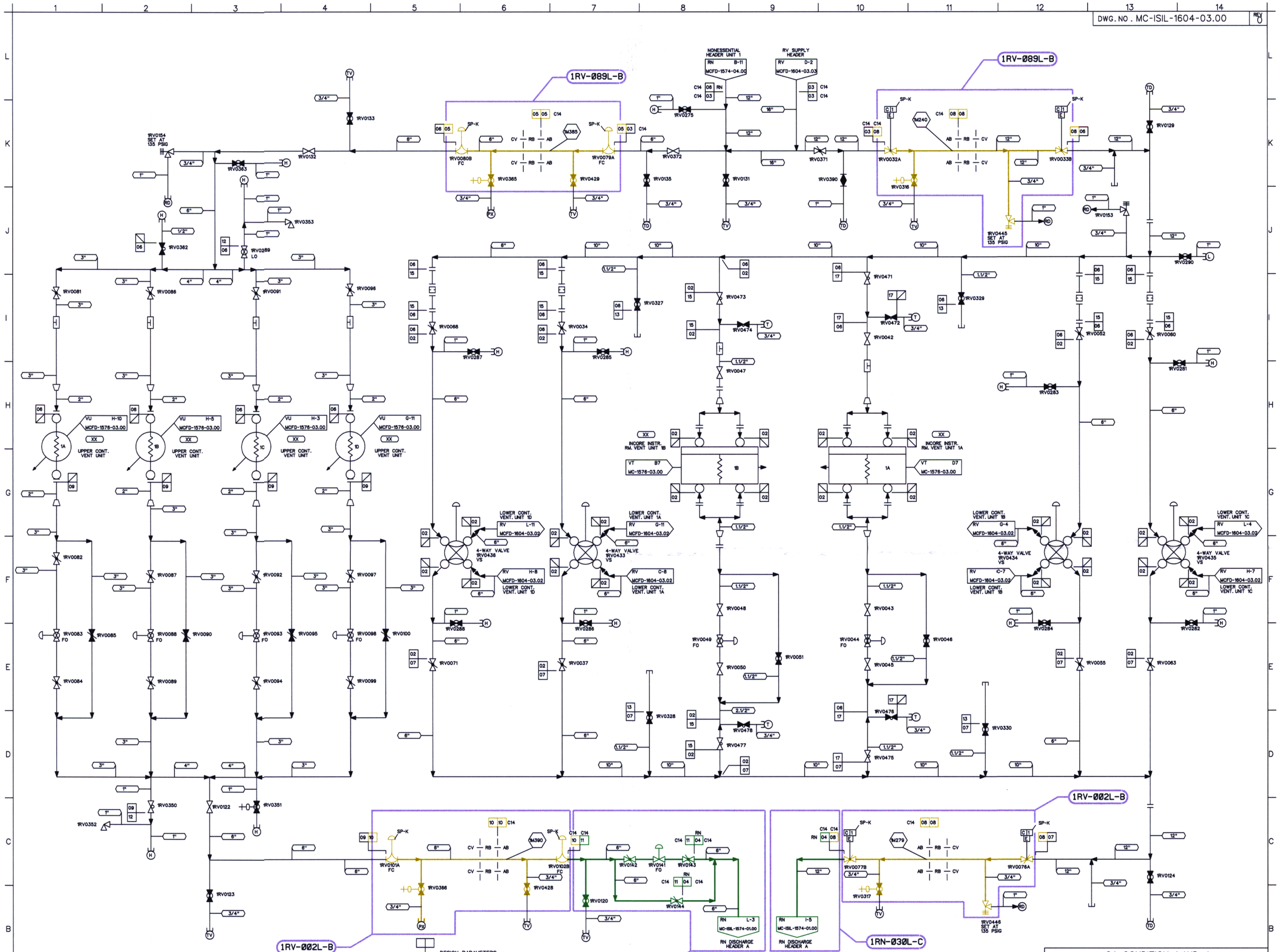

DESIGN PARAMETERS

LINE LISTING	PIPE SPEC.	PRESSURE	TEMPERATURE	CLASS	MATERIAL
RN04	PS 150.3	135 PSIG	150 F	C	CS/SS
RN06	PS 150.4	135 PSIG	95 F	F	CS
RV02	PS 150.4	135 PSIG	150 F	G	CS
RV03	PS 150.4	135 PSIG	150 F	F	CS
RV05	PS 150.2	135 PSIG	180 F	B	CS
RV06	PS 150.4	135 PSIG	150 F	F	CS
RV07	PS 150.4	135 PSIG	150 F	F	CS
RV08	PS 150.2	135 PSIG	250 F	B	CS
RV09	PS 150.4	135 PSIG	150 F	F	CS
RV10	PS 150.2	135 PSIG	180 F	B	CS
RV11	PS 150.3	135 PSIG	150 F	C	CS
RV12	PS 150.4	135 PSIG	150 F	H	CS
RV13	PS 150.4	135 PSIG	200 F	G	CS
RV15	PS 151.4	135 PSIG	150 F	G	SS

INSPECTION CRITERIA

COMPONENT	ZONE NUMBER	TYPE OF TEST	PLAN ADDENDUM NO	RI SEGMENT NO
CLASS B SYSTEM	1RV-002L-B	LEAKAGE	N/A	N/A
CLASS B SYSTEM	1RV-089L-B	LEAKAGE	N/A	N/A
CLASS C SYSTEM	1RN-030L-C	LEAKAGE	N/A	N/A

LEGEND

- ISI CLASS 1
- ISI CLASS 2
- ISI CLASS 3
- ISI EXEMPT
- ZONE BOUNDARY

THIS DRAWING IS FOR INSERVICE INSPECTION ONLY AND SHALL NOT BE USED FOR OTHER PURPOSES SUCH AS MAINTENANCE, MODIFICATION, OR REPAIRS. THIS DRAWING SHALL BE REVISED WHEN AS-BUILT CHANGES AFFECT THE INSERVICE INSPECTION BOUNDARIES AND DETAILS OF THE COMPONENTS/SYSTEMS SHOWN.

NO.	REVISIONS	DRN	DATE	CHKD	DATE	APPR	DATE
ORIG	RELEASED FOR ISI USE ONLY	TDM	5-8-01	JMB	5-7-01	RKR	5-9-01

WAIVED — CIVIL, ELEC., MECH — INSPECTED

QA CONDITION 1 AND 4

DUKE POWER COMPANY
MCGUIRE NUCLEAR STATION UNIT 1

ASME SECTION XI
INSERVICE INSPECTION PRESSURE TEST BOUNDARY OF CONTAINMENT VENTILATION COOLING WATER SYSTEM (RV)

DESIGNER	TIM MYERS	DATE 5-8-01	INSP	WAIVED	DATE
DRAWN	TIM MYERS	DATE 5-8-01	INSP	WAIVED	DATE
CHECKED	JM BOUGHMAN	DATE 5-7-01	APPR	R. KEVIN RHYNE	DATE 5-9-01

SCALE — DWG. NO. MC-ISIL-1604-03.00 — REV 0

REFERENCE FLOW DIAGRAM MCFD-1604-03.00 REV. 7

ERN:MC009AWS

D-158