DWG.NO. MC-ISIL-1609-02.01 REV 0

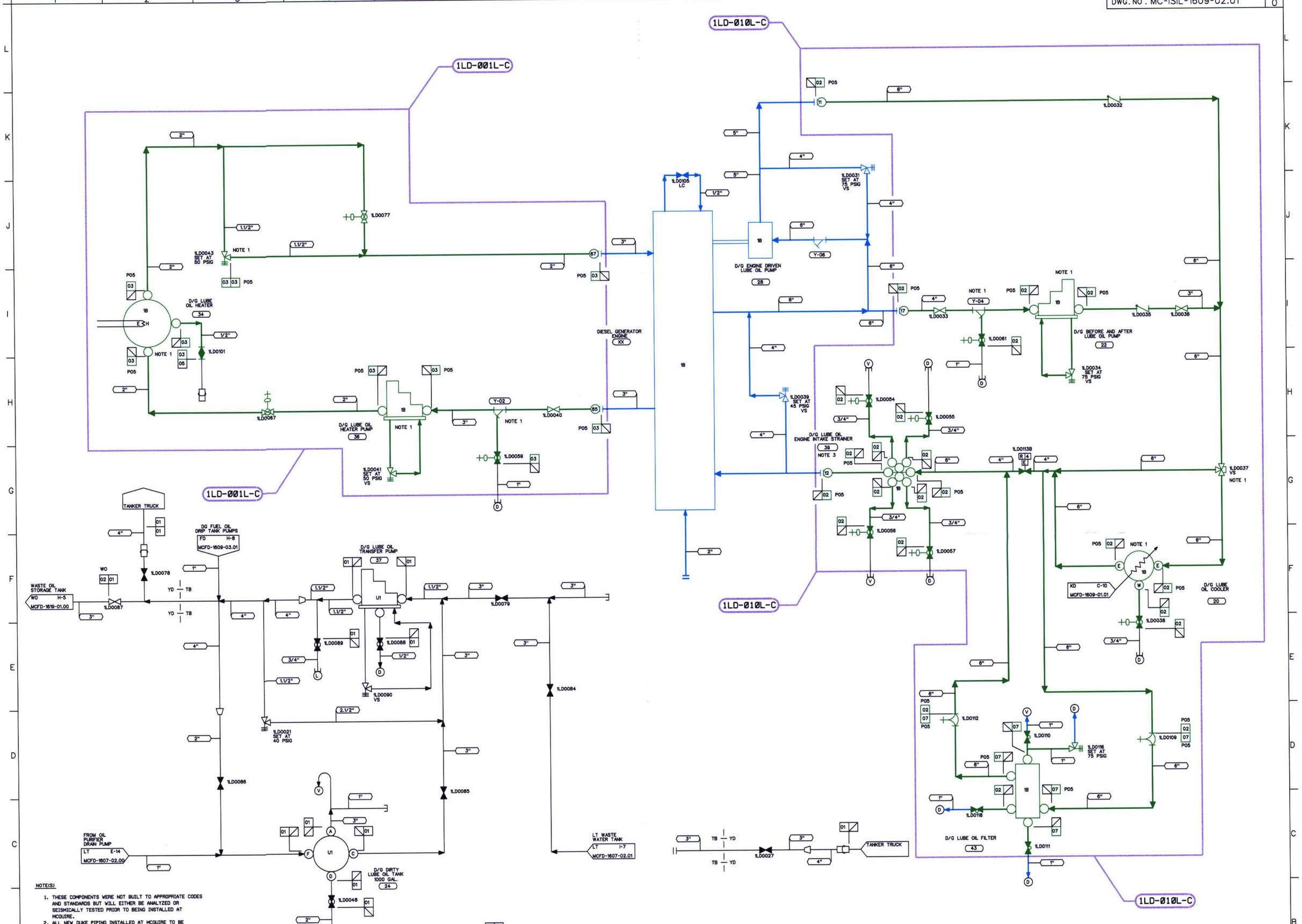

NOTE(S)

1. THESE COMPONENTS WERE NOT BUILT TO APPROPRIATE CODES AND STANDARDS BUT WILL EITHER BE ANALYZED OR SEISMICALLY TESTED PRIOR TO BEING INSTALLED AT MCGUIRE.
2. ALL NEW DUKE PIPING INSTALLED AT MCGUIRE TO BE CLASS "C".
3. THIS COMPONENT WAS NOT BUILT TO ASME III. HOWEVER, IT WAS BUILT TO THE APPLICABLE CODE AT THE TIME OF PURCHASE AS PER MCGUIRE PSAR TABLE 1A 4-2.
4. THE ISI EXEMPT BOUNDARIES SHOWN ON THIS DRAWING ARE EXEMPTED BECAUSE THEY SERVE NO SAFETY FUNCTION AS DETERMINED BY SITE ENGINEERING.

DESIGN PARAMETERS

LINE LISTING	PIPE SPEC.	PRESSURE	TEMPERATURE	CLASS	MATERIAL
LD01	PS 150.4	40 PSIG	170 F	G	CS
LD02	PS 150.3	75 PSIG	170 F	C	CS
LD03	PS 150.3	75 PSIG	150 F	C	CS
LD05	PS 150.4	75 PSIG	150 F	G	CS
LD07	PS 150.3	100 PSIG	170 F	C	CS
W002	PS 150.4	30 PSIG	170 F	G	CS

LEGEND

- ISI CLASS 1
- ISI CLASS 2
- ISI CLASS 3
- ISI EXEMPT
- ZONE BOUNDARY

INSPECTION CRITERIA

COMPONENT	ZONE NUMBER	TYPE OF TEST	PLAN ADDENDUM NO	RI SEGMENT NO
CLASS C SYSTEM	1LD-001L-C	LEAKAGE	N/A	N/A
CLASS C SYSTEM	1LD-010L-C	LEAKAGE	N/A	N/A

THIS DRAWING IS FOR INSERVICE INSPECTION ONLY AND SHALL NOT BE USED FOR OTHER PURPOSES SUCH AS MAINTENANCE, MODIFICATION, OR REPAIRS. THIS DRAWING SHALL BE REVISED WHEN AS-BUILT CHANGES AFFECT THE INSERVICE INSPECTION BOUNDARIES AND DETAILS OF THE COMPONENTS/SYSTEMS SHOWN.

NO.	REVISIONS	DRN	DATE	CHKD	DATE	APPR	DATE
ORIG	RELEASED FOR ISI USE ONLY	TDM	5-8-01	JMB	5-7-01	RKR	5-9-01

WAIVED — CIVIL, ELEC., MECH. INSPECTED

QA CONDITION 1

DUKE POWER COMPANY
MCGUIRE NUCLEAR STATION UNIT 1

ASME SECTION XI
INSERVICE INSPECTION PRESSURE TEST BOUNDARY OF DIESEL GENERATOR ENGINE LUBE OIL SYSTEM (LD)

DESIGNER TIM MYERS DATE 5-8-01 INSP. WAIVED DATE —
DRAWN TIM MYERS DATE 5-8-01 INSP. WAIVED DATE —
CHECKED JM BOUGHMAN DATE 5-7-01 APPR. R. KEVIN RHYNE DATE 5-9-01
SCALE DWG.NO. MC-ISIL-1609-02.01 REV 0

REFERENCE FLOW DIAGRAM MCFD-1609-02.01 REV. 6
ERN:MC009AX3

D-168