DWG. NO. MC-ISIL-1574-01.00 REV 0

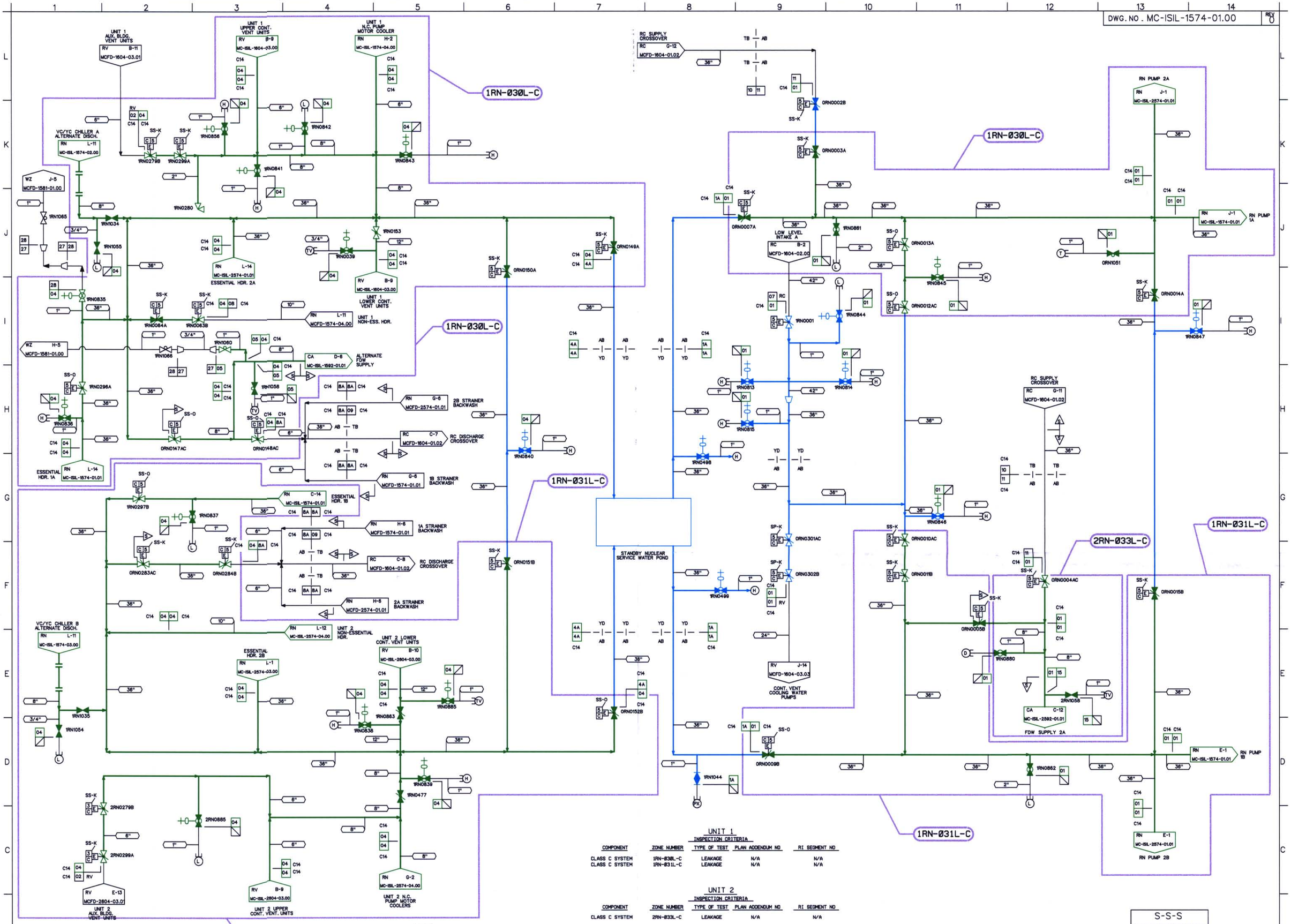


UNIT 1

| COMPONENT | ZONE NUMBER | INSPECTION CRITERIA TYPE OF TEST | PLAN ADDENDUM NO | RI SEGMENT NO |
|---|---|---|---|---|
| CLASS C SYSTEM | 1RN-030L-C | LEAKAGE | N/A | N/A |
| CLASS C SYSTEM | 1RN-031L-C | LEAKAGE | N/A | N/A |

UNIT 2

| COMPONENT | ZONE NUMBER | INSPECTION CRITERIA TYPE OF TEST | PLAN ADDENDUM NO | RI SEGMENT NO |
|---|---|---|---|---|
| CLASS C SYSTEM | 2RN-033L-C | LEAKAGE | N/A | N/A |

DESIGN PARAMETERS

| LINE LISTING | PIPE SPEC. | PRESSURE | TEMPERATURE | CLASS | MATERIAL |
|---|---|---|---|---|---|
| RC07 | PS 150.4 | 30 PSIG | 100 F | H | CS |
| RN01 | PS 150.3 | 35 PSIG | 95 F | C | CS |
| RN04 | PS 150.3 | 135 PSIG | 150 F | C | CS/SS |
| RN05 | PS 151.3 | 135 PSIG | 150 F | C | SS |
| RN08 | PS 150.4 | 135 PSIG | 150 F | F | CS |
| RN09 | PS 150.4 | 40 PSIG | 150 F | Q | CS |
| RN10 | PS 150.4 | 35 PSIG | 95 F | Q | CS |
| RN11 | PS 150.4 | 35 PSIG | 95 F | F | CS |
| RN15 | PS 151.3 | 35 PSIG | 95 F | C | SS |
| RN1A | PS 150.3 | 25 PSIG | 95 F | C | CS |
| RN27 | TS 2701.1 | 135 PSIG | 150 F | F | ST |
| RN28 | PS 151.4 | 135 PSIG | 150 F | F | SS |
| RN4A | PS 150.3 | 30 PSIG | 150 F | C | CS |
| RN8A | PS 150.4 | 40 PSIG | 150 F | F | CS |
| RV01 | PS 150.4 | 135 PSIG | 150 F | F | CS |
| RV02 | PS 150.4 | 135 PSIG | 150 F | Q | CS |
| RV04 | PS 150.4 | 135 PSIG | 150 F | F | CS |

NOTES:

1. THE ISI EXEMPT BOUNDARIES SHOWN ON THIS DRAWING ARE EXEMPTED BECAUSE THEY SERVE NO SAFETY FUNCTION AS DETERMINED BY SITE ENGINEERING.

LEGEND

- ISI CLASS 1
- ISI CLASS 2
- ISI CLASS 3
- ISI EXEMPT
- ZONE BOUNDARY

THIS DRAWING IS FOR INSERVICE INSPECTION ONLY AND SHALL NOT BE USED FOR OTHER PURPOSES SUCH AS MAINTENANCE, MODIFICATION, OR REPAIRS. THIS DRAWING SHALL BE REVISED WHEN AS-BUILT CHANGES AFFECT THE INSERVICE INSPECTION BOUNDARIES AND DETAILS OF THE COMPONENTS/SYSTEMS SHOWN.

| NO. | REVISIONS | DRN | DATE | CHKD | DATE | APPR | DATE |
|---|---|---|---|---|---|---|---|
| ORIG | RELEASED FOR ISI USE ONLY | TDM | 5-8-01 | JMB | 5-7-01 | RKR | 5-9-01 |

W A I V E D — CIVIL, ELEC, MECH — INSPECTED

QA CONDITION 1 AND 4

DUKE POWER COMPANY

MCGUIRE NUCLEAR STATION UNIT 1 & 2

ASME SECTION XI

INSERVICE INSPECTION PRESSURE TEST BOUNDARY OF NUCLEAR SERVICE WATER SYSTEM (RN)

DESIGNER TIM MYERS DATE 5-8-01 INSP. WAIVED DATE —
DRAWN TIM MYERS DATE 5-8-01 INSP. WAIVED DATE —
CHECKED JIM BOUGHMAN DATE 5-7-01 APPR. R. KEVIN RHYNE DATE 5-9-01

SCALE — DWG. NO. MC-ISIL-1574-01.00 REV 0

REFERENCE FLOW DIAGRAM MCFD-1574-01.00 REV. 6

ERN: MC009AW9

D-139