DWG. NO. MC-ISIL-1573-04.00 REV 0

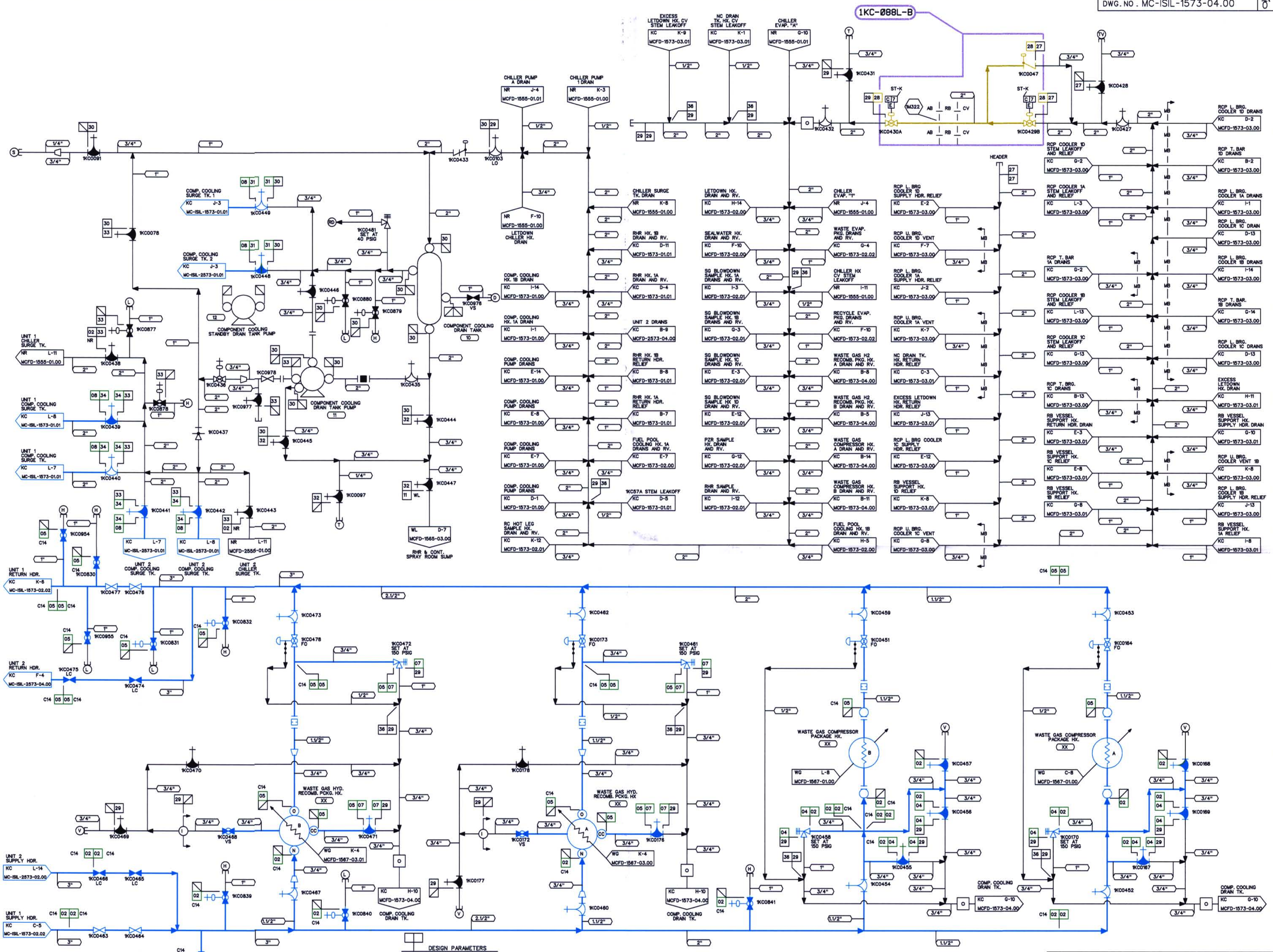

NOTES:

1. THE ISI EXEMPT BOUNDARIES SHOWN ON THIS DRAWING ARE EXEMPTED BECAUSE THEY SERVE NO SAFETY FUNCTION AS DETERMINED BY SITE ENGINEERING.

INSPECTION CRITERIA

COMPONENT	ZONE NUMBER	TYPE OF TEST	PLAN ADDENDUM NO	RI SEGMENT NO
CLASS B SYSTEM	1KC-088L-B	LEAKAGE	N/A	N/A

DESIGN PARAMETERS

LINE LISTING	PIPE SPEC.	PRESSURE	TEMPERATURE	CLASS	MATERIAL
KC02	PS 150.3	150 PSIG	120 F	C	CS
KC04	PS 151.3	150 PSIG	170 F	C	SS
KC05	PS 150.3	150 PSIG	160 F	C	CS
KC07	PS 151.3	150 PSIG	160 F	C	SS
KC08	PS 151.3	15 PSIG	160 F	C	SS
KC27	PS 151.4	150 PSIG	170 F	G	SS
KC28	PS 151.2	150 PSIG	250 F	B	SS
KC29	PS 151.4	150 PSIG	170 F	G	SS
KC30	PS 151.4	40 PSIG	170 F	G	SS
KC31	PS 151.3	40 PSIG	170 F	C	SS
KC32	PS 151.4	40 PSIG	170 F	E	SS
KC33	PS 151.4	100 PSIG	170 F	G	SS
KC34	PS 151.3	100 PSIG	170 F	C	SS
KC36	TS 2701.1	150 PSIG	170 F	G	ST
NR02	PS 150.4	15 PSIG	105 F	G	CS
WL11	PS 151.4	50 PSIG	200 F	E	SS

LEGEND

- ISI CLASS 1
- ISI CLASS 2
- ISI CLASS 3
- ISI EXEMPT
- ZONE BOUNDARY

THIS DRAWING IS FOR INSERVICE INSPECTION ONLY AND SHALL NOT BE USED FOR OTHER PURPOSES SUCH AS MAINTENANCE, MODIFICATION, OR REPAIRS. THIS DRAWING SHALL BE REVISED WHEN AS-BUILT CHANGES AFFECT THE INSERVICE INSPECTION BOUNDARIES AND DETAILS OF THE COMPONENTS/SYSTEMS SHOWN.

NO.	REVISIONS	DRN	DATE	CHKD	DATE	APPR	DATE
ORIG	RELEASED FOR ISI USE ONLY	TDM	5-9-01	JMB	5-9-01	RKR	5-9-01

W A I V E D — CIVIL ELEC. MECH. INSPECTED

QA CONDITION 1 AND 2

DUKE POWER COMPANY
MCGUIRE NUCLEAR STATION UNIT 1

ASME SECTION XI
INSERVICE INSPECTION PRESSURE TEST BOUNDARY OF COMPONENT COOLING SYSTEM (KC)

DESIGNER	TIM MYERS	DATE 5-9-01	INSP	WAIVED	DATE —
DRAWN	TIM MYERS	DATE 5-9-01	INSP	WAIVED	DATE —
CHECKED	JIM BOUGHMAN	DATE 5-9-01	APPR	R. KEVIN RHYNE	DATE 5-9-01

SCALE — DWG. NO. MC-ISIL-1573-04.00 REV 0

REFERENCE FLOW DIAGRAM MCFD-1573-04.00 REV. 12

ERN:MC009AW8

D-138