DWG. NO. MC-ISIL-1573-01.00 REV 0

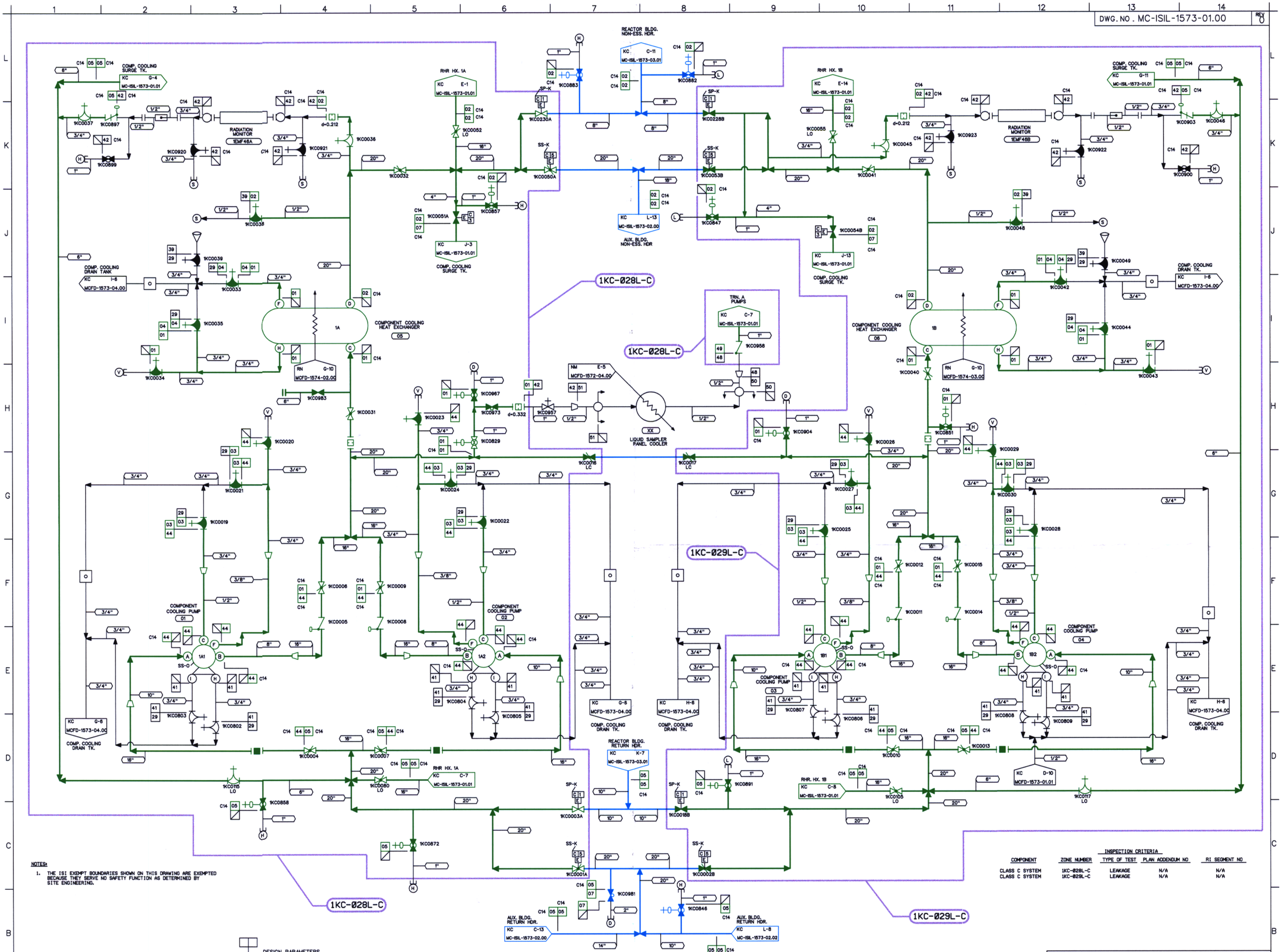

NOTES:

1. THE ISI EXEMPT BOUNDARIES SHOWN ON THIS DRAWING ARE EXEMPTED BECAUSE THEY SERVE NO SAFETY FUNCTION AS DETERMINED BY SITE ENGINEERING.

INSPECTION CRITERIA

COMPONENT	ZONE NUMBER	TYPE OF TEST	PLAN ADDENDUM NO	RI SEGMENT NO
CLASS C SYSTEM	1KC-028L-C	LEAKAGE	N/A	N/A
CLASS C SYSTEM	1KC-029L-C	LEAKAGE	N/A	N/A

DESIGN PARAMETERS

LINE LISTING	PIPE SPEC.	PRESSURE	TEMPERATURE	CLASS	MATERIAL
KC01	PS 150.3	150 PSIG	160 F	C	CS
KC02	PS 150.3	150 PSIG	120 F	C	CS
KC03	PS 151.3	150 PSIG	170 F	C	SS
KC04	PS 151.3	150 PSIG	170 F	C	SS
KC05	PS 150.3	150 PSIG	160 F	C	CS
KC07	PS 151.3	150 PSIG	160 F	C	SS
KC29	PS 151.4	150 PSIG	170 F	G	SS
KC39	PS 151.4	150 PSIG	120 F	G	SS
KC41	PS 151.4	150 PSIG	170 F	G	SS
KC42	PS 150.4	150 PSIG	160 F	E	CS
KC44	PS 150.3	144 PSIG	160 F	C	CS
KC48	PS 150.4	150 PSIG	170 F	E	CS
KC49	PS 150.3	150 PSIG	170 F	C	CS
KC50	TS 2701.1	150 PSIG	170 F	E	ST
KC51	TS 2701.1	150 PSIG	160 F	E	ST

LEGEND

- ISI CLASS 1
- ISI CLASS 2
- ISI CLASS 3
- ISI EXEMPT
- ZONE BOUNDARY

THIS DRAWING IS FOR INSERVICE INSPECTION ONLY AND SHALL NOT BE USED FOR OTHER PURPOSES SUCH AS MAINTENANCE, MODIFICATION, OR REPAIRS. THIS DRAWING SHALL BE REVISED WHEN AS-BUILT CHANGES AFFECT THE INSERVICE INSPECTION BOUNDARIES AND DETAILS OF THE COMPONENTS/SYSTEMS SHOWN.

NO.	REVISIONS	DRN	DATE	CHKD	DATE	APPR	DATE
ORIG	RELEASED FOR ISI USE ONLY	TDM	5-8-01	JMB	5-7-01	RKR	5-9-01

WAIVED — CIVIL ELEC. MECH — INSPECTED

QA CONDITION 1 AND 2

DUKE POWER COMPANY
MCGUIRE NUCLEAR STATION UNIT 1

ASME SECTION XI
INSERVICE INSPECTION PRESSURE TEST BOUNDARY OF COMPONENT COOLING SYSTEM (KC)

DESIGNER TIM MYERS DATE 5-8-01 INSP WAIVED DATE
DRAWN TIM MYERS DATE 5-8-01 INSP WAIVED DATE
CHECKED JIM BOUGHMAN DATE 5-7-01 APPR R. KEVIN RHYNE DATE 5-9-01
SCALE DWG. NO. MC-ISIL-1573-01.00 REV 0

REFERENCE FLOW DIAGRAM MCFD-1573-01.00 REV. 5
ERN:MC009AW5

D-135