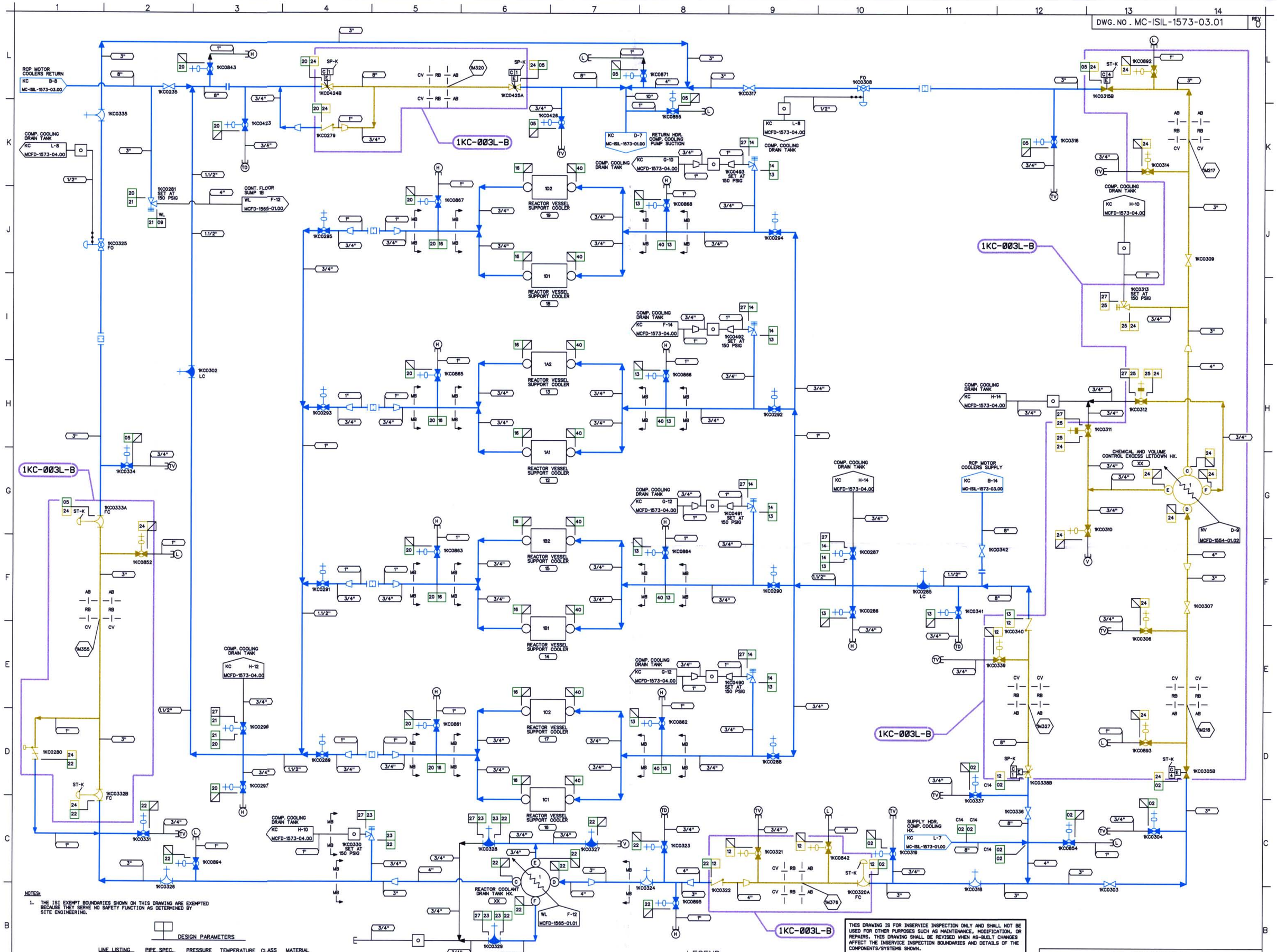

NOTES:

1. THE ISI EXEMPT BOUNDARIES SHOWN ON THIS DRAWING ARE EXEMPTED BECAUSE THEY SERVE NO SAFETY FUNCTION AS DETERMINED BY SITE ENGINEERING.

DESIGN PARAMETERS

LINE LISTING	PIPE SPEC.	PRESSURE	TEMPERATURE	CLASS	MATERIAL
KC02	PS 150.3	150 PSIG	120 F	C	CS
KC05	PS 150.3	150 PSIG	160 F	C	CS
KC12	PS 150.2	150 PSIG	250 F	B	CS
KC13	PS 150.3	150 PSIG	120 F	C	CS
KC14	PS 151.3	150 PSIG	170 F	C	SS
KC16	PS 151.3	150 PSIG	128 F	C	SS
KC20	PS 150.3	150 PSIG	169 F	C	CS
KC21	PS 151.3	150 PSIG	169 F	C	SS
KC22	PS 150.3	150 PSIG	130 F	C	CS
KC23	PS 151.3	150 PSIG	170 F	C	SS
KC24	PS 150.2	150 PSIG	250 F	B	CS
KC25	PS 151.2	150 PSIG	250 F	B	SS
KC27	PS 151.4	150 PSIG	170 F	G	SS
KC36	TS 2701.1	150 PSIG	170 F	G	ST
KC40	PS 151.3	150 PSIG	120 F	C	SS
WL09	PS 151.4	50 PSIG	200 F	E	SS

COMPONENT	ZONE NUMBER	INSPECTION CRITERIA TYPE OF TEST	PLAN ADDENDUM NO.	RI SEGMENT NO.
CLASS B SYSTEM	1KC-003L-B	LEAKAGE	N/A	N/A

LEGEND

- ISI CLASS 1
- ISI CLASS 2
- ISI CLASS 3
- ISI EXEMPT
- ZONE BOUNDARY

THIS DRAWING IS FOR INSERVICE INSPECTION ONLY AND SHALL NOT BE USED FOR OTHER PURPOSES SUCH AS MAINTENANCE, MODIFICATION, OR REPAIRS. THIS DRAWING SHALL BE REVISED WHEN AS-BUILT CHANGES AFFECT THE INSERVICE INSPECTION BOUNDARIES AND DETAILS OF THE COMPONENTS/SYSTEMS SHOWN.

NO.	REVISIONS	DRN	DATE	CHKD	DATE	APPR	DATE	CIVIL	ELEC.	MECH
ORIG	RELEASED FOR ISI USE ONLY	TDM	5-8-01	JMB	5-7-01	RKR	5-9-01	W A I V E D		

INSPECTED

QA CONDITION 1

DUKE POWER COMPANY
MCGUIRE NUCLEAR STATION UNIT 1

ASME SECTION XI
INSERVICE INSPECTION PRESSURE TESTING BOUNDARY OF COMPONENT COOLING SYSTEM (KC)

DESIGNER TIM MYERS DATE 5-8-01 INSP. WAIVED DATE
DRAWN TIM MYERS DATE 5-8-01 INSP. WAIVED DATE
CHECKED JIM BOUGHMAN DATE 5-7-01 APPR. R. KEVIN RHYNE DATE 5-9-01
SCALE DWG. NO. MC-ISIL-1573-03.01 REV. 0

REFERENCE FLOW DIAGRAM MCFD-1573-03.01 REV. 4
ERN: MC009AW7

D-137