DWG. NO. MC-ISIL-1574-02.01 REV 0

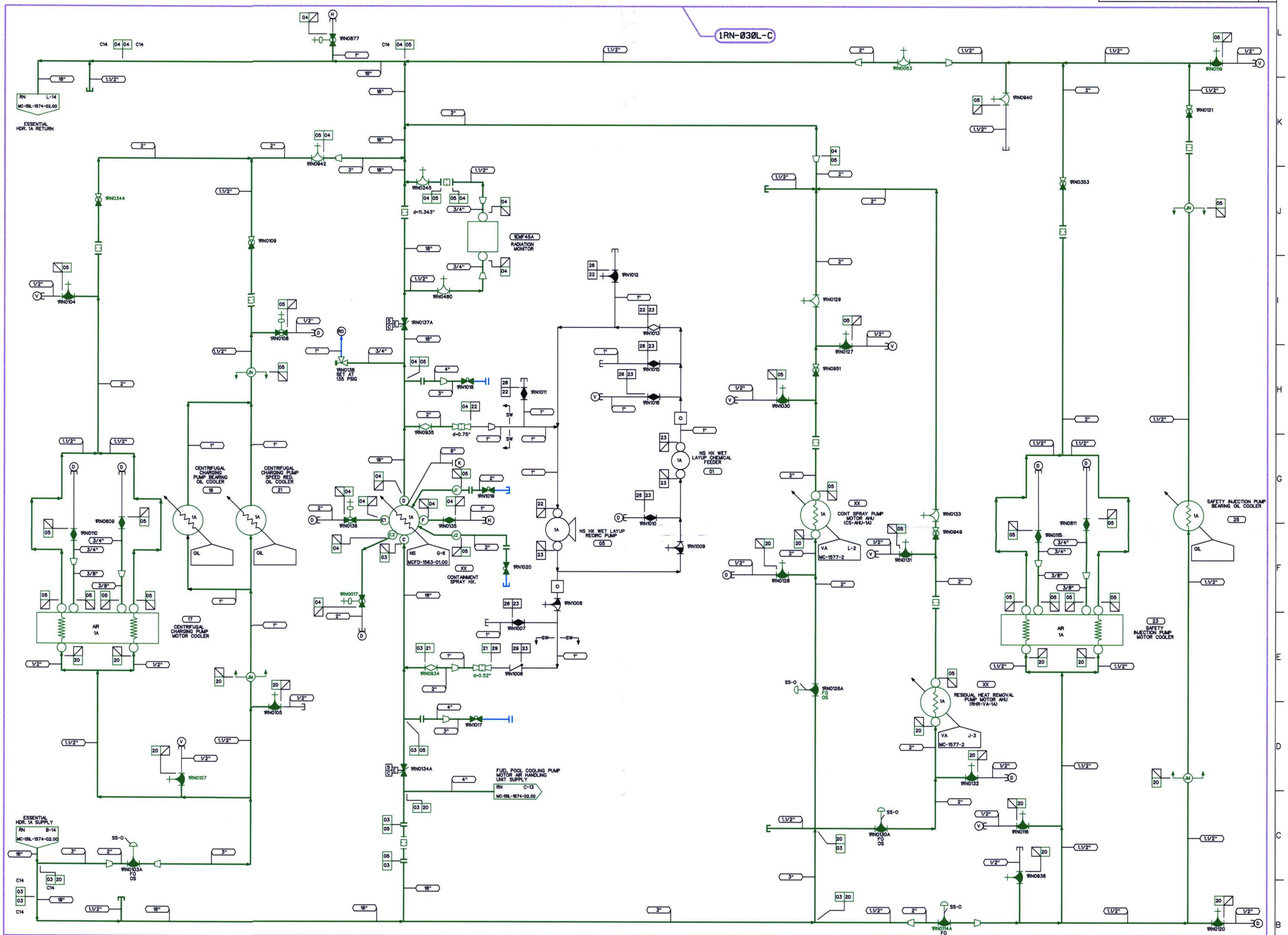

NOTES:

1. THE ISI EXEMPT BOUNDARIES SHOWN ON THIS DRAWING ARE EXEMPTED BECAUSE THEY SERVE NO SAFETY FUNCTION AS DETERMINED BY SITE ENGINEERING.

INSPECTION CRITERIA

COMPONENT	ZONE NUMBER	TYPE OF TEST	PLAN ADDENDUM NO	RI SEGMENT NO
CLASS C SYSTEM	1RN-030L-C	LEAKAGE	N/A	N/A

DESIGN PARAMETERS

LINE LISTING	PIPE SPEC.	PRESSURE	TEMPERATURE	CLASS	MATERIAL
RN03	PS 150.3	135 PSIG	95 F	C	CS/SS
RN04	PS 150.3	135 PSIG	150 F	C	CS/SS
RN05	PS 151.3	135 PSIG	150 F	C	SS
RN20	PS 151.3	135 PSIG	95 F	C	SS
RN21	PS 150.3	150 PSIG	150 F	C	CS/SS
RN22	TS 2701.1	135 PSIG	150 F	H	ST
RN23	TS 2701.1	150 PSIG	150 F	H	ST
RN26	PS 151.4	150 PSIG	150 F	H	SS
RN29	PS 150.4	150 PSIG	150 F	H	CS

LEGEND

- ISI CLASS 1
- ISI CLASS 2
- ISI CLASS 3
- ISI EXEMPT
- ZONE BOUNDARY

THIS DRAWING IS FOR INSERVICE INSPECTION ONLY AND SHALL NOT BE USED FOR OTHER PURPOSES SUCH AS MAINTENANCE, MODIFICATION, OR REPAIRS. THIS DRAWING SHALL BE REVISED WHEN AS-BUILT CHANGES AFFECT THE INSERVICE INSPECTION BOUNDARIES AND DETAILS OF THE COMPONENTS/SYSTEMS SHOWN.

NO.	REVISIONS	DRN	DATE	CHKD	DATE	APPR	DATE
ORIG	RELEASED FOR ISI USE ONLY	TDM	5-8-01	JMB	5-7-01	RKR	5-9-01

W A I V E D — CIVIL ELEC. MECH — INSPECTED

QA CONDITION 1

DUKE POWER COMPANY
MCGUIRE NUCLEAR STATION UNIT 1

ASME SECTION XI
INSERVICE INSPECTION PRESSURE TEST BOUNDARY OF NUCLEAR SERVICE WATER SYSTEM (RN)

DESIGNER	TIM MYERS	DATE 5-8-01	INSP	WAIVED	DATE —
DRAWN	TIM MYERS	DATE 5-8-01	INSP	WAIVED	DATE —
CHECKED	JM BOUGHMAN	DATE 5-7-01	APPR	R. KEVIN RHYNE	DATE 5-9-01

SCALE — DWG. NO. MC-ISIL-1574-02.01 REV 0

REFERENCE FLOW DIAGRAM MCFD-1574-02.01 REV. 4

ERN: MC009AWC

D-142