DWG. NO. MC-ISIN-1618-04.00 REV 0

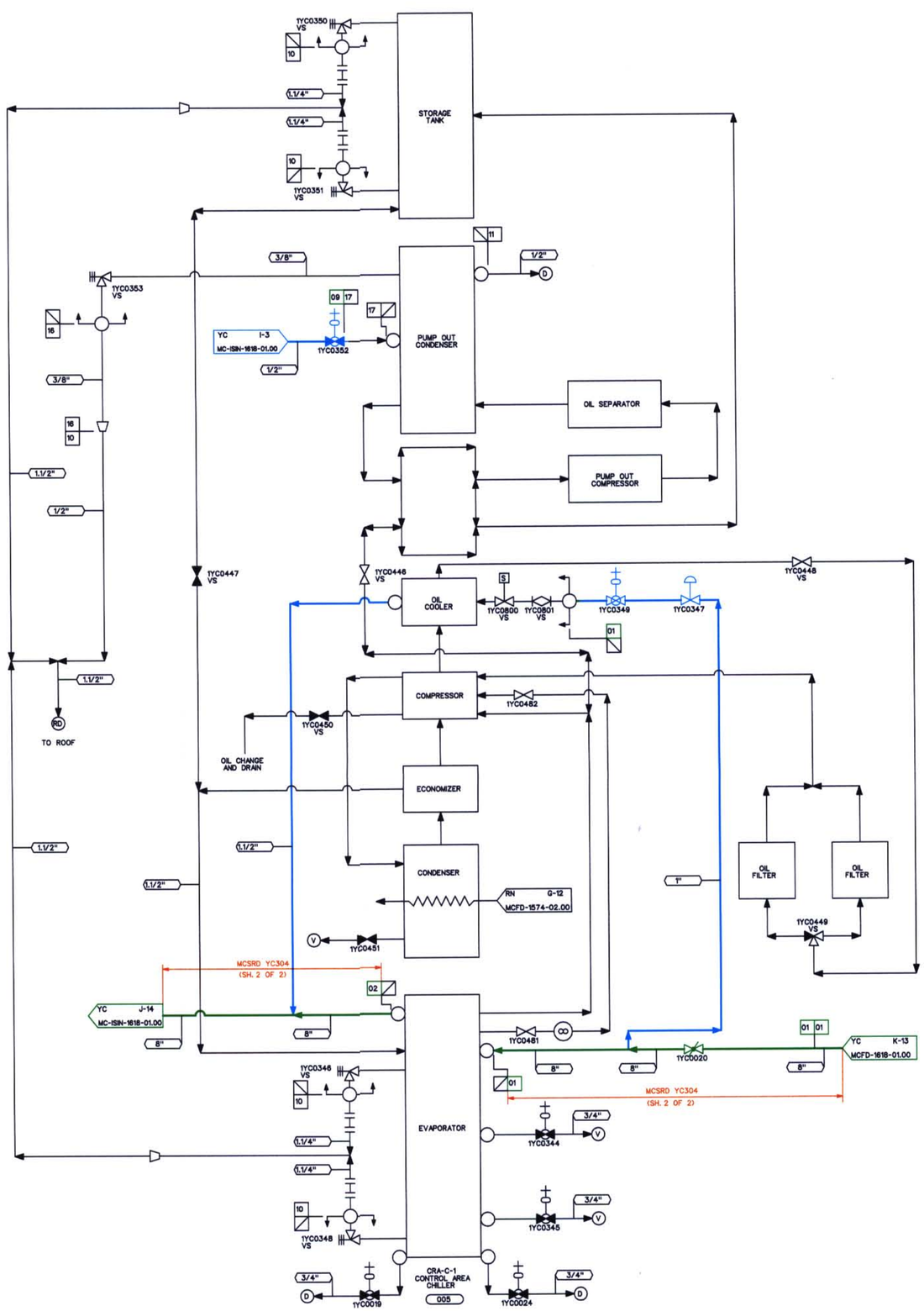

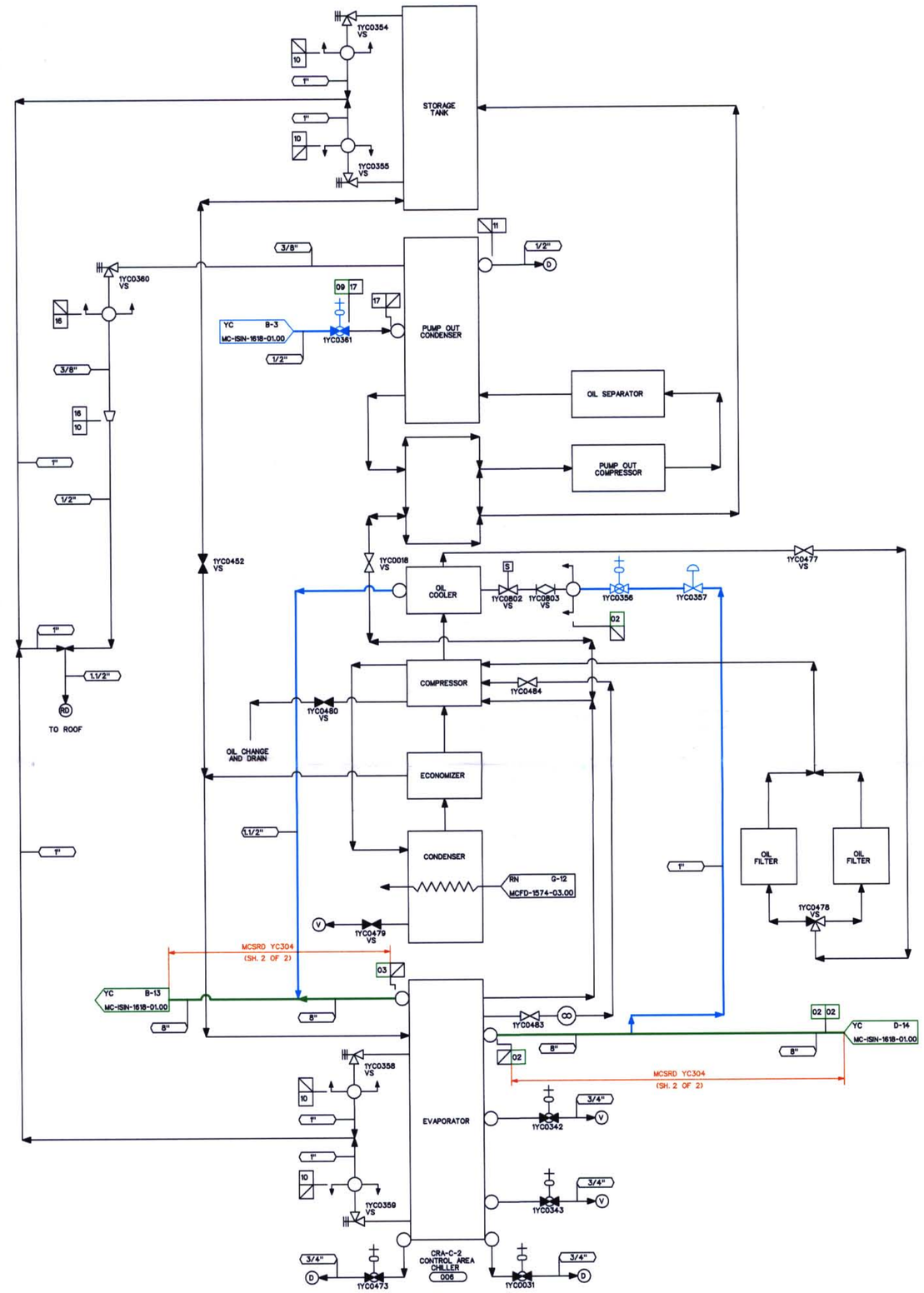

NOTE(S)

1. PIPING SHOWN IN BLUE IN THE FOLLOWING LINE LISTINGS SHALL BE EXEMPT PER IWD-1220(a)(1): YC01, YC02, YC03, YC09.
2. WELD ISO & MATH MODEL DRAWING REFERENCES ARE APPROXIMATE AND ARE FOR INFORMATION ONLY.

DESIGN PARAMETERS

LINE LISTING	PIPE SPEC.	PRESSURE	TEMPERATURE	CLASS	MATERIAL
YC01	PS 150.3	110 PSIG	100 F	C	CS
YC02	PS 150.3	110 PSIG	100 F	C	CS
YC03	PS 150.3	110 PSIG	100 F	C	CS
YC09	PS 151.3	110 PSIG	100 F	C	SS
YC10	PS 151.4	275 PSIG	100 F	F	SS
YC11	PS 151.4	110 PSIG	100 F	F	SS
YC16	PS 165	275 PSIG	100 F	G	CT
YC17	PS 151.4	110 PSIG	100 F	F	SS

LEGEND

- ISI CLASS 1
- ISI CLASS 2
- ISI CLASS 3
- ISI EXEMPT
- NON-ISI

THIS DRAWING IS FOR INSERVICE INSPECTION ONLY AND SHALL NOT BE USED FOR OTHER PURPOSES SUCH AS MAINTENANCE, MODIFICATION, OR REPAIRS. THIS DRAWING SHALL BE REVISED WHEN AS-BUILT CHANGES AFFECT THE INSERVICE INSPECTION BOUNDARIES AND DETAILS OF THE COMPONENTS/SYSTEMS SHOWN.

NO.	REVISIONS	DRN	DATE	CHKD	DATE	APPR	DATE	CIVIL	ELEC.	MECH
ORIG	RELEASED FOR ISI USE ONLY	TDM	11-7-00	GDS	11-13-00	RKR	12-14-00	W A I V E D		

INSPECTED

QA CONDITION 1

DUKE POWER COMPANY
MCGUIRE NUCLEAR STATION UNIT 1 AND 2

ASME SECTION XI
INSERVICE INSPECTION NDE BOUNDARY OF CONTROL AREA
CHILLED WATER SYSTEM (YC)

DESIGNER TIM MYERS DATE 11-7-00 INSP. WAIVED DATE
DRAWN TIM MYERS DATE 11-7-00 INSP. WAIVED DATE
CHECKED GARY D SCARBORO DATE 11-7-00 APPR. R. KEVIN RHYNE DATE 12-14-00
SCALE DWG. NO. MC-ISIN-1618-04.00 REV 0

REFERENCE FLOW DIAGRAM MCFD-1618-04.00 REV. 2
ERN:MC009AE0

D-100