DWG. NO. MC-ISIN-1618-01.00 REV 0

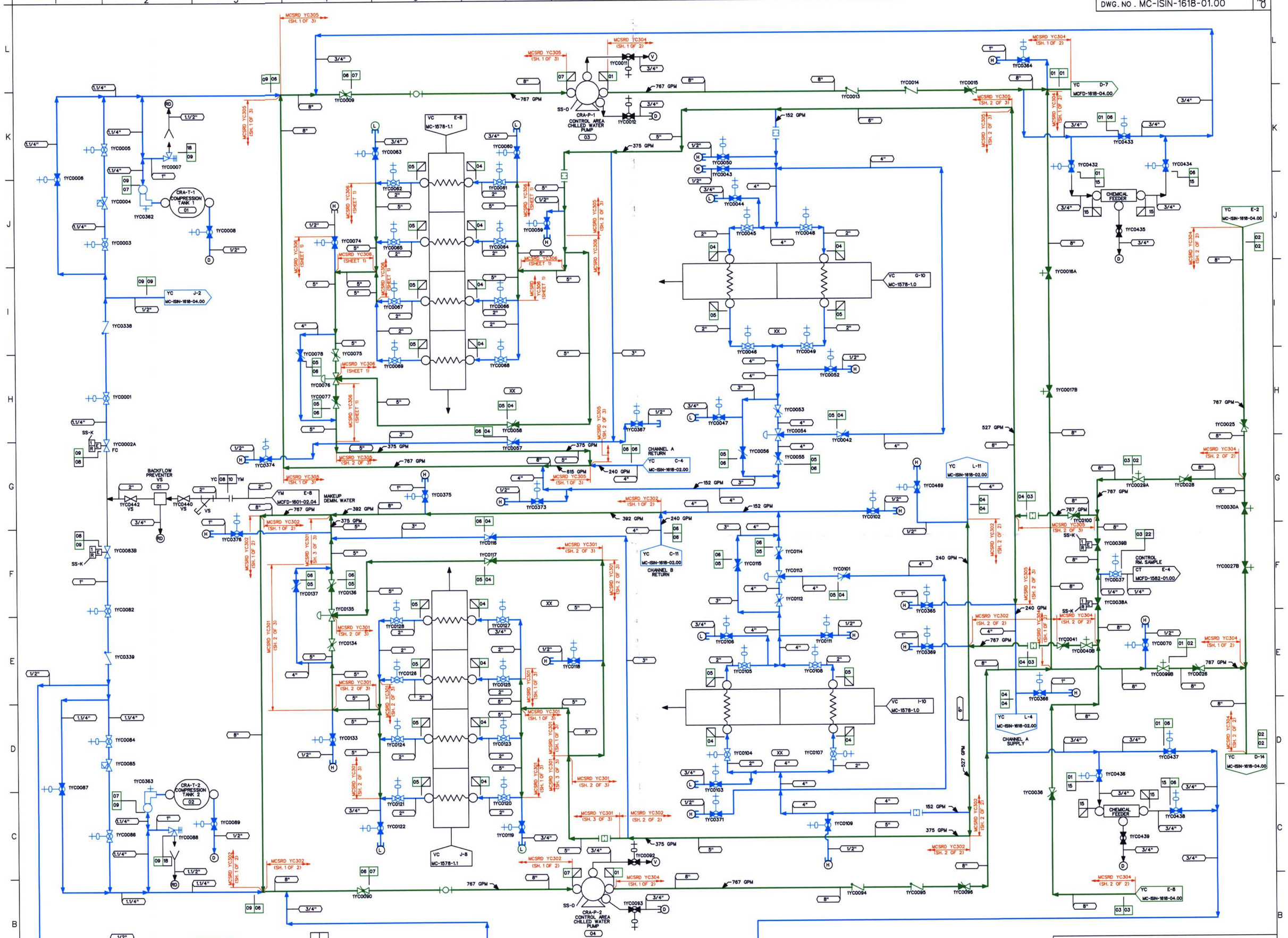

DESIGN PARAMETERS

LINE LISTING	PIPE SPEC.	PRESSURE	TEMPERATURE	CLASS	MATERIAL
CT22	TS 2701.1	110 PSIG	95 F	H	ST
YC01	PS 150.3	110 PSIG	100 F	C	CS
YC02	PS 150.3	110 PSIG	100 F	C	CS
YC03	PS 150.3	110 PSIG	100 F	C	CS
YC04	PS 150.3	110 PSIG	100 F	C	CS
YC05	PS 150.3	110 PSIG	100 F	C	CS
YC06	PS 150.3	110 PSIG	100 F	C	CS
YC07	PS 150.3	110 PSIG	100 F	C	CS
YC08	PS 151.4	110 PSIG	100 F	G	SS
YC09	PS 151.3	110 PSIG	100 F	C	SS
YC15	PS 150.4	110 PSIG	100 F	F	CS
YC18	PS 151.4	ATMOS	AMBIENT	G	SS
YM10	PS 157	150 PSIG	120 F	H	AL

NOTE(S)

1. PIPING SHOWN IN BLUE IN THE FOLLOWING LINE LISTINGS SHALL BE EXEMPT PER IWD-1220(a)(1): YC01, YC02, YC03, YC04, YC05, YC06, YC07, YC09.
2. WELD ISO & MATH MODEL DRAWING REFERENCES ARE APPROXIMATE AND ARE FOR INFORMATION ONLY.

LEGEND

- ISI CLASS 1
- ISI CLASS 2
- ISI CLASS 3
- ISI EXEMPT
- NON-ISI

THIS DRAWING IS FOR INSERVICE INSPECTION ONLY AND SHALL NOT BE USED FOR OTHER PURPOSES SUCH AS MAINTENANCE, MODIFICATION, OR REPAIRS. THIS DRAWING SHALL BE REVISED WHEN AS-BUILT CHANGES AFFECT THE INSERVICE INSPECTION BOUNDARIES AND DETAILS OF THE COMPONENTS/SYSTEMS SHOWN.

ORIG	RELEASED FOR ISI USE ONLY	TDM	11-7-00	GDS	11-13-00	RKR	12-14-00	W A I V E D		
NO.	REVISIONS	DRN	DATE	CHKD	DATE	APPR	DATE	CIVIL	ELEC.	MECH
								INSPECTED		

QA CONDITION 1

DUKE POWER COMPANY
MCGUIRE NUCLEAR STATION UNIT 1 AND 2

ASME SECTION XI
INSERVICE INSPECTION NDE BOUNDARY OF CONTROL AREA CHILLED WATER SYSTEM (YC)

DESIGNER	TIM MYERS	DATE 11-7-00	INSP	WAIVED	DATE —
DRAWN	TIM MYERS	DATE 11-7-00	INSP	WAIVED	DATE —
CHECKED	GARY D SCARBORO	DATE 11-7-00	APPR	R. KEVIN RHYNE	DATE 12-14-00

SCALE — DWG. NO. MC-ISIN-1618-01.00 REV 0

REFERENCE FLOW DIAGRAM MCFD-1618-01.00 REV. 0

ERN: MC009ADY

D-98