DWG. NO. MC-ISIL-1570-01.00 REV 0

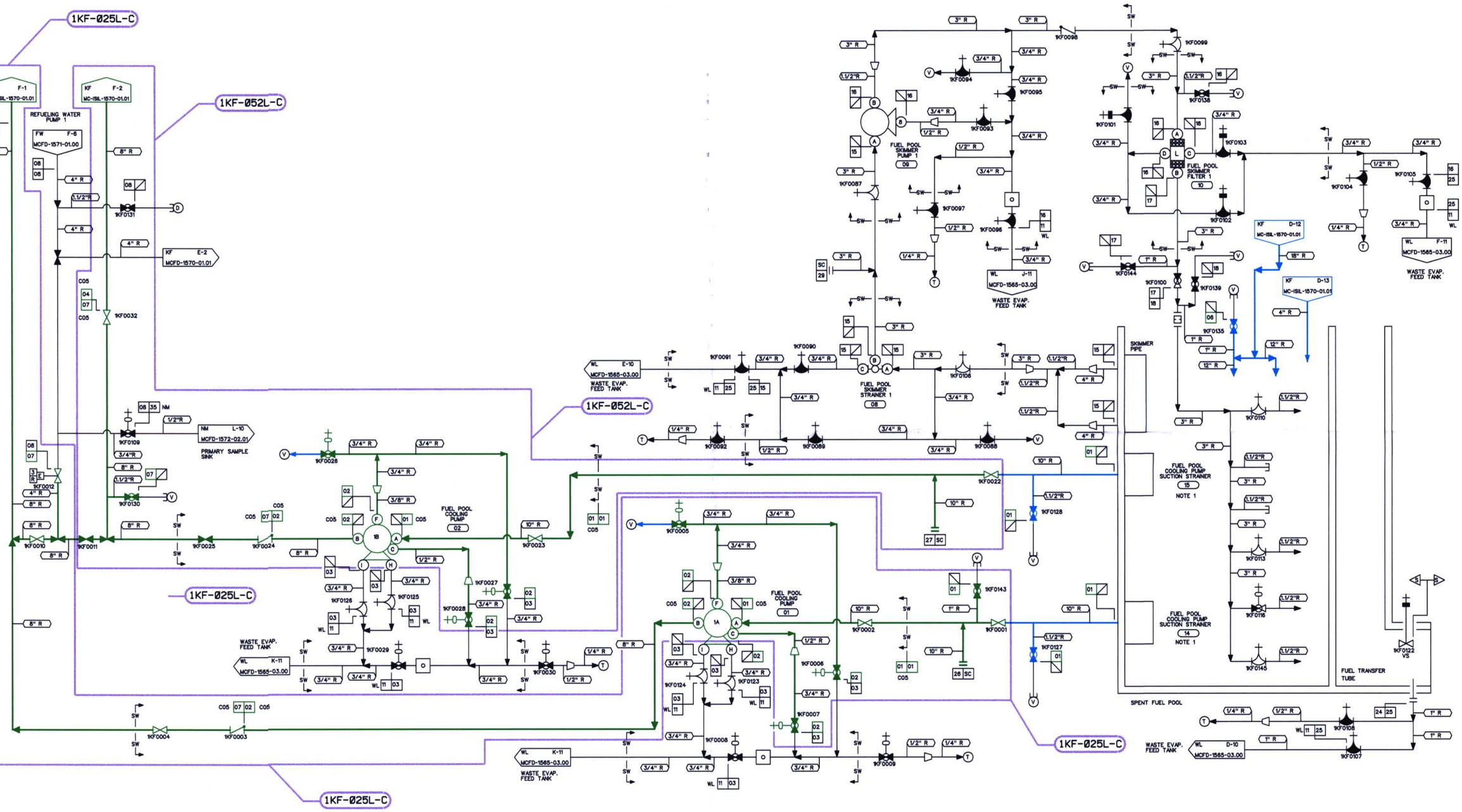

NOTE(S)

1. THIS COMPARTMENT WAS NOT BUILT TO ASME III. HOWEVER, IT WAS BUILT TO THE APPLICABLE CODE AT THE TIME OF PURCHASE PER McGUIRE PSAR TABLE 1A.4-2.
2. THE ISI EXEMPT BOUNDARIES SHOWN ON THIS DRAWING ARE EXEMPTED BECAUSE THEY SERVE NO SAFETY FUNCTION AS DETERMINED BY SITE ENGINEERING.

INSPECTION CRITERIA

COMPONENT	ZONE NUMBER	TYPE OF TEST	PLAN ADDENDUM NO.	RI SEGMENT NO
CLASS C SYSTEM	1KF-025L-C	LEAKAGE	N/A	N/A
CLASS C SYSTEM	1KF-052L-C	LEAKAGE	N/A	N/A

DESIGN PARAMETERS

LINE LISTING	PIPE SPEC.	PRESSURE	TEMPERATURE	CLASS	MATERIAL
KF01	PS 151.3	20 PSIG	200 F	C	SS
KF02	PS 151.3	155 PSIG	200 F	C	SS
KF03	PS 151.4	155 PSIG	200 F	E	SS
KF04	PS 151.3	150 PSIG	200 F	C	SS
KF06	PS 151.3	25 PSIG	200 F	C	SS
KF07	PS 151.3	175 PSIG	200 F	C	SS
KF08	PS 151.4	175 PSIG	150 F	E	SS
KF15	PS 151.4	20 PSIG	200 F	E	SS
KF16	PS 151.4	45 PSIG	200 F	E	SS
KF17	PS 151.4	45 PSIG	200 F	E	SS
KF18	PS 151.4	20 PSIG	200 F	E	SS
KF22	PS 151.3	25 PSIG	200 F	C	SS
KF24	PS 151.4	50 PSIG	200 F	H	SS
KF25	PS 151.4	50 PSIG	200 F	E	SS
NM35	TS 2701.1	175 PSIG	150 F	E	ST
WL11	PS 151.4	50 PSIG	200 F	E	SS

LEGEND

- ISI CLASS 1
- ISI CLASS 2
- ISI CLASS 3
- ISI EXEMPT
- ZONE BOUNDARY

S-S-S
STANDBY SHUTDOWN SYSTEM

THIS DRAWING IS FOR INSERVICE INSPECTION ONLY AND SHALL NOT BE USED FOR OTHER PURPOSES SUCH AS MAINTENANCE, MODIFICATION, OR REPAIRS. THIS DRAWING SHALL BE REVISED WHEN AS-BUILT CHANGES AFFECT THE INSERVICE INSPECTION BOUNDARIES AND DETAILS OF THE COMPONENTS/SYSTEMS SHOWN.

NO.	REVISIONS	DRN	DATE	CHKD	DATE	APPR	DATE
ORIG	RELEASED FOR ISI USE ONLY	TDM	5-8-01	JMB	5-7-01	RKR	5-9-01

W A I V E D
CIVIL ELEC. MECH
INSPECTED

QA CONDITION 1 AND 2

DUKE POWER COMPANY
MCGUIRE NUCLEAR STATION UNIT 1

ASME SECTION XI
INSERVICE INSPECTION PRESSURE TEST BOUNDARY OF SPENT FUEL COOLING SYSTEM (KF)

DESIGNER TIM MYERS DATE 5-8-01 INSP. WAIVED DATE
DRAWN TIM MYERS DATE 5-8-01 INSP. WAIVED DATE
CHECKED JIM BOUGMAN DATE 5-7-01 APPR. R. KEVIN RHYNE DATE 5-9-01
SCALE DWG. NO. MC-ISIL-1570-01.00 REV 0

REFERENCE FLOW DIAGRAM MCFD-1570-01.00 REV. 1
ERN:MC009AVZ

D-129