DWG. NO. MC-ISIN-1617-01.00 REV 0

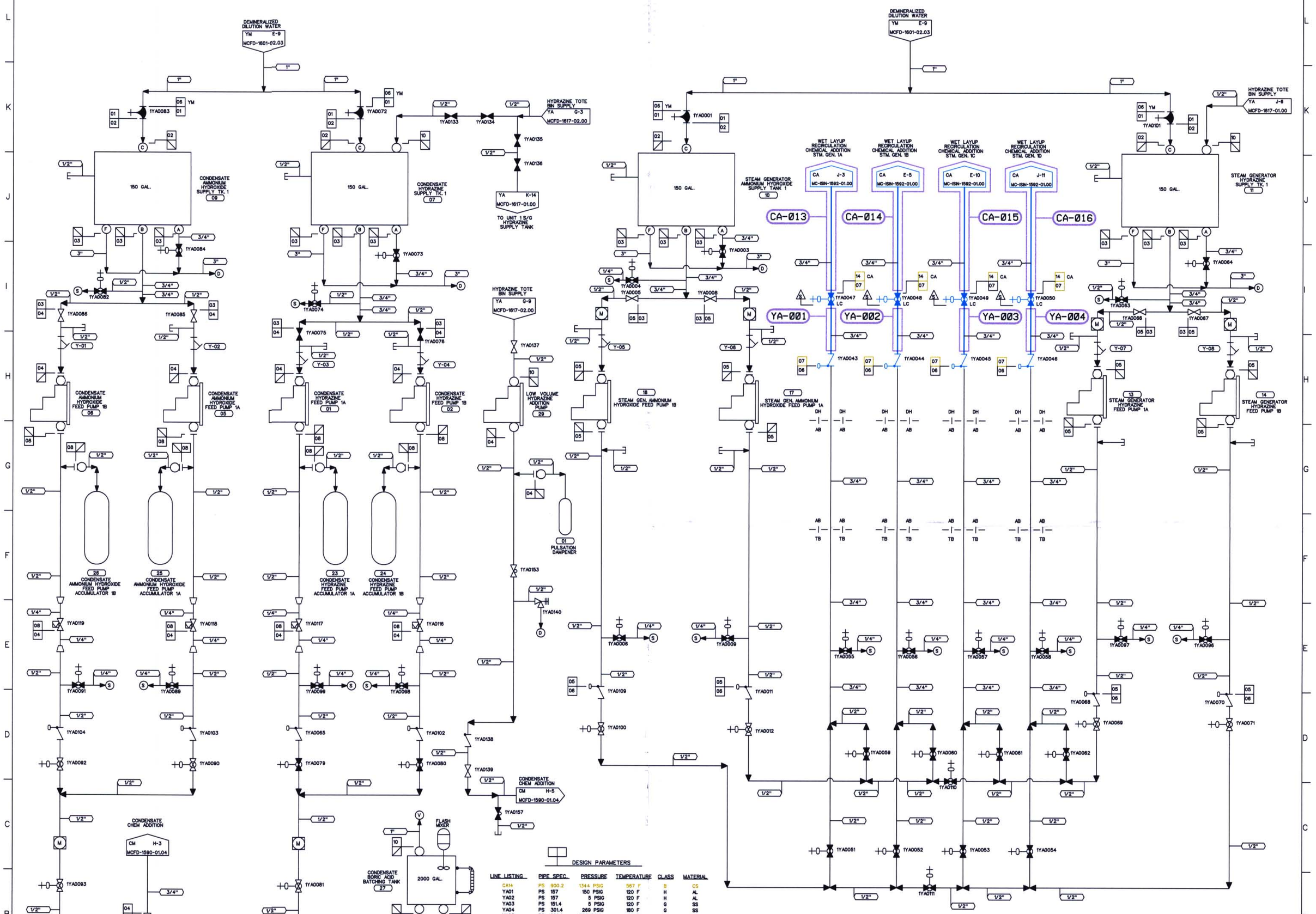

NOTE(S)

1. PIPING SHOWN IN BLUE IN THE FOLLOWING LINE LISTINGS SHALL BE EXEMPT PER IWC-1222(a): YA87, CA14.

DESIGN PARAMETERS

LINE LISTING	PIPE SPEC.	PRESSURE	TEMPERATURE	CLASS	MATERIAL
CA14	PS 900.2	1344 PSIG	567 F	B	CS
YA01	PS 157	150 PSIG	120 F	H	AL
YA02	PS 157	5 PSIG	120 F	H	AL
YA03	PS 151.4	5 PSIG	120 F	G	SS
YA04	PS 301.4	269 PSIG	180 F	G	SS
YA05	PS 901.4	1185 PSIG	120 F	G	SS
YA06	PS 901.4	1185 PSIG	199 F	G	SS
YA07	PS 901.2	1185 PSIG	567 F	B	SS
YA08	PS 301.4	319 PSIG	180 F	G	SS
YA10	PS 151.4	150 PSIG	120 F	G	SS
YM06	PS 157	150 PSIG	120 F	H	AL
YM10	PS 157	150 PSIG	120 F	H	AL

LEGEND

- ISI CLASS 1
- ISI CLASS 2
- ISI CLASS 3
- ISI EXEMPT
- NON-ISI

THIS DRAWING IS FOR INSERVICE INSPECTION ONLY AND SHALL NOT BE USED FOR OTHER PURPOSES SUCH AS MAINTENANCE, MODIFICATION, OR REPAIRS. THIS DRAWING SHALL BE REVISED WHEN AS-BUILT CHANGES AFFECT THE INSERVICE INSPECTION BOUNDARIES AND DETAILS OF THE COMPONENTS/SYSTEMS SHOWN.

S-S-S
STANDBY SHUTDOWN SYSTEM

NO.	REVISIONS	DRN	DATE	CHKD	DATE	APPR	DATE
ORIG	RELEASED FOR ISI USE ONLY	TDM	11-7-00	PTF	11-8-00	RKR	12-14-00

W A I V E D
CIVIL ELEC. MECH
INSPECTED

QA CONDITION 1

DUKE POWER COMPANY
MCGUIRE NUCLEAR STATION UNIT 1

ASME SECTION XI
INSERVICE INSPECTION NDE BOUNDARY OF CONVENTIONAL CHEMICAL ADDITION SYSTEM (YA)

DESIGNER	TIM MYERS	DATE 11-7-00	INSP.	WAIVED	DATE
DRAWN	TIM MYERS	DATE 11-7-00	INSP.	WAIVED	DATE
CHECKED	GARY D SCARBORO	DATE 11-7-00	APPR.	R. KEVIN RHYNE	DATE 12-14-00

SCALE DWG. NO. MC-ISIN-1617-01.00 REV. 0

REFERENCE FLOW DIAGRAM
MCFD-1617-01.00 REV. 3
ERN:MC0099ZL

D-97