DWG. NO. MC-ISIL-1565-01.00 REV 0

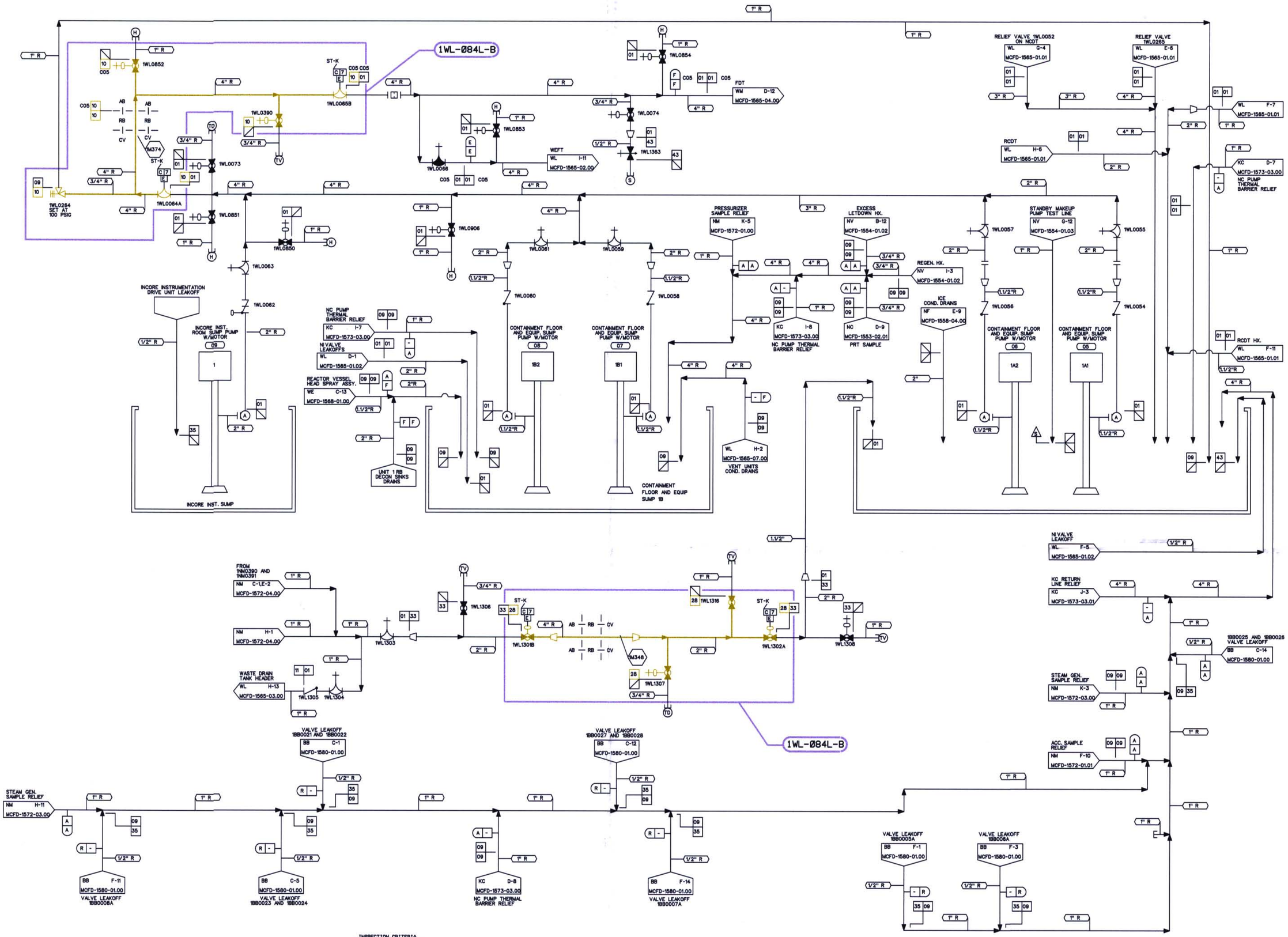

ABANDONED COMPONENTS RELATED

INSPECTION CRITERIA

COMPONENT	ZONE NUMBER	TYPE OF TEST	PLAN ADDENDUM NO.	RI SEGMENT NO
CLASS B SYSTEM	1WL-084L-B	LEAKAGE	N/A	N/A

DESIGN PARAMETERS

LINE LISTING	PIPE SPEC.	PRESSURE	TEMPERATURE	CLASS	MATERIAL
WL01	PS 151.4	100 PSIG	200 F	E	SS
WL09	PS 151.4	50 PSIG	200 F	E	SS
WL10	PS 151.2	100 PSIG	250 F	B	SS
WL11	PS 151.4	50 PSIG	200 F	E	SS
WL28	PS 2501.2	100 PSIG	250 F	B	SS
WL33	PS 2501.4	100 PSIG	200 F	E	ST
WL35	TS 2701.1	50 PSIG	200 F	E	ST
WL43	TS 2701.1	100 PSIG	200 F	E	ST

LEGEND

- ISI CLASS 1
- ISI CLASS 2
- ISI CLASS 3
- ISI EXEMPT
- ZONE BOUNDARY

THIS DRAWING IS FOR INSERVICE INSPECTION ONLY AND SHALL NOT BE USED FOR OTHER PURPOSES SUCH AS MAINTENANCE, MODIFICATION, OR REPAIRS. THIS DRAWING SHALL BE REVISED WHEN AS-BUILT CHANGES AFFECT THE INSERVICE INSPECTION BOUNDARIES AND DETAILS OF THE COMPONENTS/SYSTEMS SHOWN.

NO.	REVISIONS	DRN	DATE	CHKD	DATE	APPR	DATE	CIVIL	ELEC	MECH
ORIG	RELEASED FOR ISI USE ONLY	TDM	5-8-01	JMB	5-7-01	RKR	5-9-01	W A I V E D		

INSPECTED

QA CONDITION 1, 2, AND 4

DUKE POWER COMPANY
MCGUIRE NUCLEAR STATION UNIT 1

ASME SECTION XI
INSERVICE INSPECTION PRESSURE TEST BOUNDARY OF LIQUID WASTE RECYCLE SYSTEM
(WL)

DESIGNER TIM MYERS DATE 5-8-01 INSP WAIVED DATE
DRAWN TIM MYERS DATE 5-8-01 INSP WAIVED DATE
CHECKED JIM BOUGHMAN DATE 5-7-01 APPR R. KEVIN RHYNE DATE 5-9-01
SCALE DWG. NO. MC-ISIL-1565-01.00 REV 0

REFERENCE FLOW DIAGRAM MCFD-1565-01.00 REV. 5
ERN:MC009AVW

D-126