DWG. NO. MC-1564-1 REV. 0

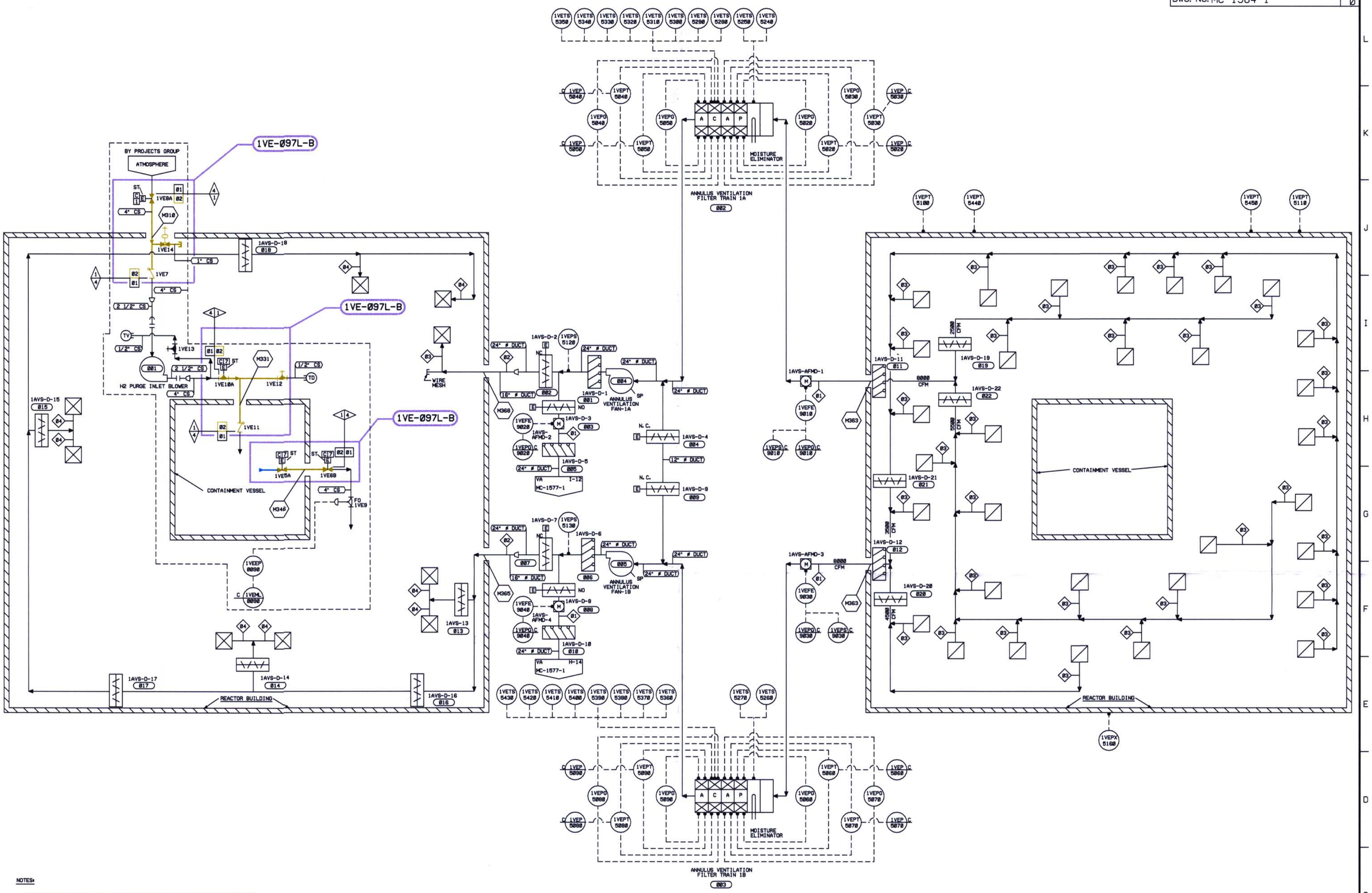

NOTES:

1. THE HYDROGEN PURGE SUBSYSTEM IS INSTALLED AS PIPE BUT FUNCTIONS AS DUKE CALSS H, SEISMIC CATEGORY II, NON-SAFETY RELATED DUCT Q.A.4, EXCEPT CONTAINMENT PENETRATION WHICH IS Q.A.1 CLASS B.
2. THE NON HYDROGEN PURGE PORTION OF THIS SYSTEM IS Q.A.1 ANS SAFETY CLASS 3, SEISMIC CATEGORY I, DUKE CLASS H SAFETY RELATED HVAC SYSTEM. SEE DUKE NUCLEAR GUIDE 1.26 FOR DEFINITION OF DUKE CLASS H DUCT CLASSIFICATIONS.
3. THE ISI EXEMPT BOUNDARIES SHOWN ON THIS DRAWING ARE EXEMPTED BECAUSE THEY SERVE NO SAFETY FUNCTION AS DETERMINED BY SITE ENGINEERING.

Q.A. CONDITION BOUNDARY

LEGEND

- ISI CLASS 1
- ISI CLASS 2
- ISI CLASS 3
- ISI EXEMPT
- ZONE BOUNDARY

QA CONDITION 4
SEISMIC CATEGORY II

QA CONDITION 1
NUCLEAR SAFETY RELATED

INSPECTION CRITERIA

COMPONENT	ZONE NUMBER	TYPE OF TEST	PLAN ADDENDUM NO	RI SEGMENT NO
CLASS B SYSTEM	1VE-097L-B	LEAKAGE	N/A	N/A

DESIGN PARAMETERS

LINE LISTING	PRESSURE	TEMPERATURE	CLASS	MATERIAL
01	15 PSIG	250	H	CS (SEE NOTE 1)
02	15 PSIG	250	B	CS

NORMAL OPERATING COND.

1. 0000 CFM 14.7 PSIA 100°F
2. 0 CFM -3.5 IN.W.G. 100°F
3. 500 CFM -3.5 IN.W.G. 100°F
4. 0 CFM -3.5 IN.W.G. 100°F

DESIGN COND.

1. 0000 CFM 14.7 PSIA 190°F
2. 0000 CFM 14.7 PSIA 190°F
3. 500 CFM 14.7 PSIA 190°F
4. 1000 CFM 14.7 PSIA 190°F

REFERENCE DRAWING
MC-1564-1 REV. 30
ERN: MC009AVV

NO.	REVISIONS	DRN	DATE	CHKD	DATE	APPR	DATE
ORIG.	RELEASED FOR ISI USE ONLY	TDM	5-9-01	JMB	5-9-01	RKR	5-9-01

INSPECTED: W A I V E D — CIVIL / ELEC. / MECH.

DUKE POWER COMPANY
MCGUIRE NUCLEAR STATION UNIT 1

ASME SECTION XI
INSERVICE INSPECTION PRESSURE TEST BOUNDARY OF ANNULUS VENTILATION SYSTEM (VE)

DESIGNER TIM MYERS DATE 5-9-01 INSP. WAIVED DATE —
DRAWN TIM MYERS DATE 5-9-01 INSP. WAIVED DATE —
CHECKED JIM BOUGHMAN DATE 5-9-01 APPR. R. KEVIN RHYNE DATE 5-9-01

SCALE DWG. NO. MC-ISIL-1564-01.00 REV. 0

D-125