DWG. NO. MC-ISIL-1562-03.01 REV 0

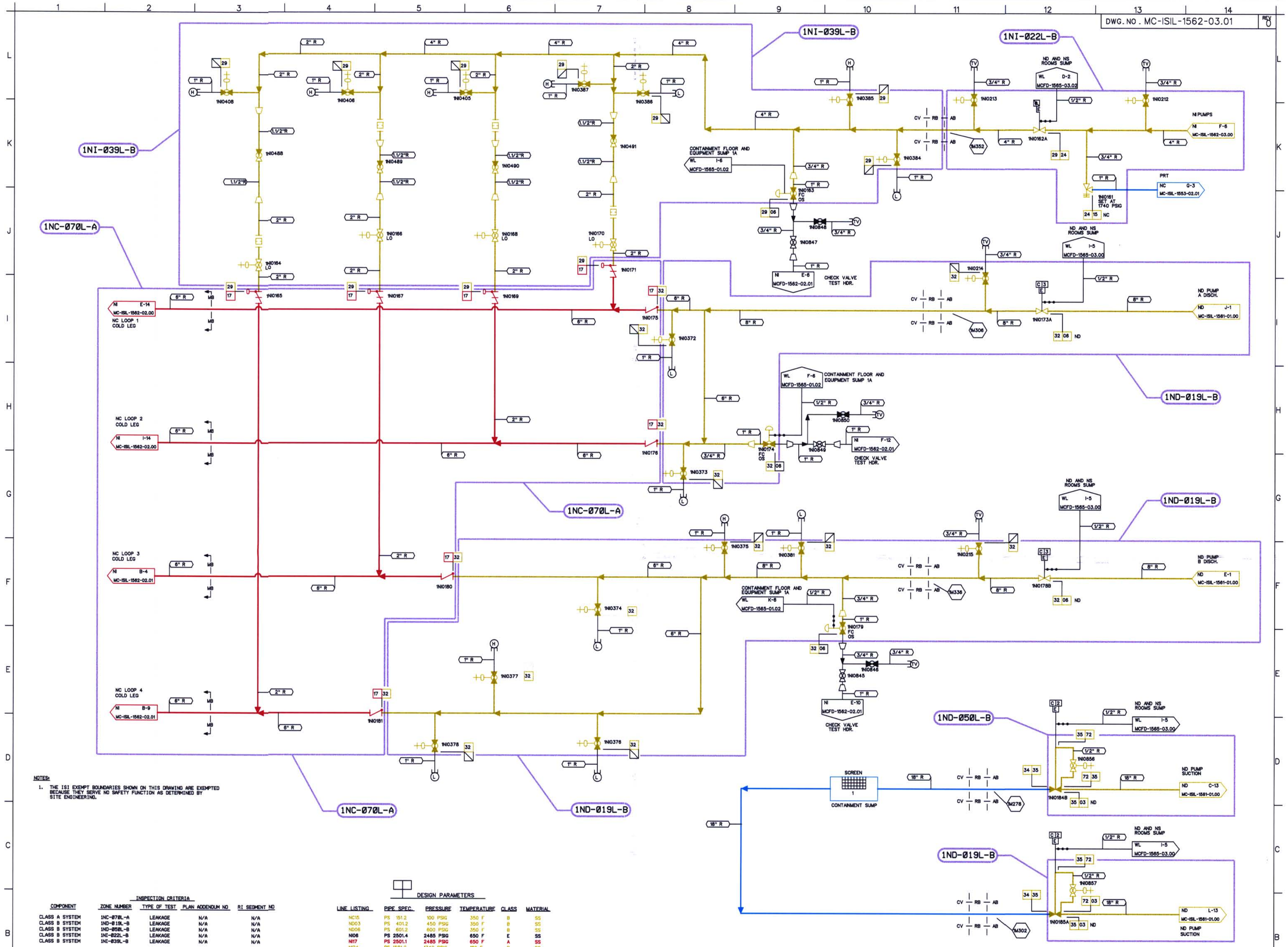

NOTES:

1. THE ISI EXEMPT BOUNDARIES SHOWN ON THIS DRAWING ARE EXEMPTED BECAUSE THEY SERVE NO SAFETY FUNCTION AS DETERMINED BY SITE ENGINEERING.

INSPECTION CRITERIA

COMPONENT	ZONE NUMBER	TYPE OF TEST	PLAN ADDENDUM NO	RI SEGMENT NO
CLASS A SYSTEM	1NC-070L-A	LEAKAGE	N/A	N/A
CLASS B SYSTEM	1ND-019L-B	LEAKAGE	N/A	N/A
CLASS B SYSTEM	1ND-050L-B	LEAKAGE	N/A	N/A
CLASS B SYSTEM	1NI-022L-B	LEAKAGE	N/A	N/A
CLASS B SYSTEM	1NI-039L-B	LEAKAGE	N/A	N/A

DESIGN PARAMETERS

LINE LISTING	PIPE SPEC.	PRESSURE	TEMPERATURE	CLASS	MATERIAL
NC15	PS 151.2	100 PSIG	350 F	B	SS
ND03	PS 401.2	450 PSIG	350 F	B	SS
ND06	PS 601.2	600 PSIG	350 F	B	SS
NI06	PS 2501.4	2485 PSIG	650 F	E	SS
NI17	PS 2501.1	2485 PSIG	650 F	A	SS
NI24	PS 1501.2	1740 PSIG	189 F	B	SS
NI29	PS 2501.2	2485 PSIG	650 F	B	SS
NI32	PS 2501.2	2485 PSIG	650 F	B	SS
NI34	PS 151.2	22 PSIG	250 F	B	SS
NI35	PS 2501.1	450 PSIG	350 F	B	SS
NI38	PS 150.7	22 PSIG	250 F	B	CS
NI72	TS 2701.1	450 PSIG	350 F	B	ST
WL35	TS 2701.1	50 PSIG	200 F	E	ST
WL43	TS 2701.1	100 PSIG	200 F	E	ST

LEGEND

- ISI CLASS 1
- ISI CLASS 2
- ISI CLASS 3
- ISI EXEMPT
- ZONE BOUNDARY

THIS DRAWING IS FOR INSERVICE INSPECTION ONLY AND SHALL NOT BE USED FOR OTHER PURPOSES SUCH AS MAINTENANCE, MODIFICATION, OR REPAIRS. THIS DRAWING SHALL BE REVISED WHEN AS-BUILT CHANGES AFFECT THE INSERVICE INSPECTION BOUNDARIES AND DETAILS OF THE COMPONENTS/SYSTEMS SHOWN.

NO.	REVISIONS	DRN	DATE	CHKD	DATE	APPR	DATE
ORIG	RELEASED FOR ISI USE ONLY	TDM	5-8-01	JMB	5-7-01	RKR	5-9-01

WAIVED INSPECTED — CIVIL ELEC. MECH

QA CONDITION 1 AND 2

DUKE POWER COMPANY
MCGUIRE NUCLEAR STATION UNIT 1

ASME SECTION XI
INSERVICE INSPECTION PRESSURE TEST BOUNDARY OF SAFETY INJECTION SYSTEM
(NI)

DESIGNER TIM MYERS DATE 5-8-01 INSP WAIVED DATE —
DRAWN TIM MYERS DATE 5-8-01 INSP WAIVED DATE —
CHECKED JIM BOUGHMAN DATE 5-7-01 APPR R. KEVIN RHYNE DATE 5-9-01
SCALE DWG. NO. MC-ISIL-1562-03.01 REV 0

REFERENCE FLOW DIAGRAM MCFD-1562-03.01 REV. 4
ERN: MC009AVS

D-122