DWG. NO . MC-ISIN-1602-01.02 REV 0

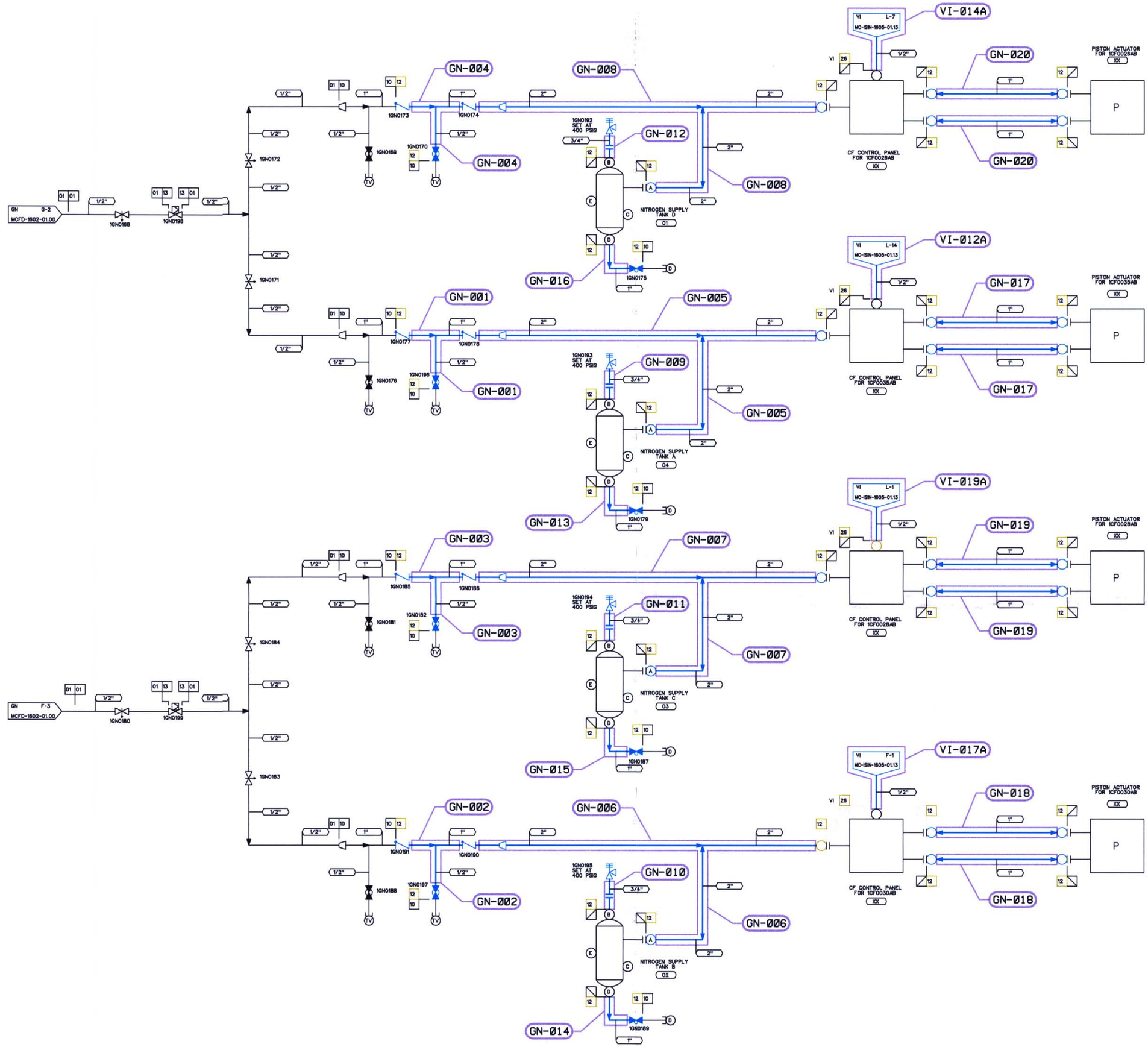

NOTES:

1. PIPING SHOWN IN BLUE IN THE FOLLOWING LINE LISTINGS IS EXEMPT PER IWC-1222(a): GN12

DESIGN PARAMETERS

LINE LISTING	PIPE SPEC.	PRESSURE	TEMPERATURE	CLASS	MATERIAL
GN01	TS 2701.1	2450 PSIG	120 F	H	ST
GN10	PS 401.4	400 PSIG	120 F	G	SS
GN12	PS 301.2	400 PSIG	120 F	B	SS
GN13	PS 1501.4	2450 PSIG	120 F	G	SS
VI26	TS 2701.1	150 PSIG	140 F	B	ST

LEGEND

- ISI CLASS 1
- ISI CLASS 2
- ISI CLASS 3
- ISI EXEMPT
- NON-ISI

THIS DRAWING IS FOR INSERVICE INSPECTION ONLY AND SHALL NOT BE USED FOR OTHER PURPOSES SUCH AS MAINTENANCE, MODIFICATION, OR REPAIRS. THIS DRAWING SHALL BE REVISED WHEN AS-BUILT CHANGES AFFECT THE INSERVICE INSPECTION BOUNDARIES AND DETAILS OF THE COMPONENTS/SYSTEMS SHOWN.

NO.	REVISIONS	DRN	DATE	CHKD	DATE	APPR	DATE
ORIG	RELEASED FOR ISI USE ONLY	TDM	11-7-00	PTF	11-8-00	RKR	12-14-00

W A I V E D — CIVIL | ELEC. | MECH — INSPECTED

QA CONDITION 1

DUKE POWER COMPANY
MCGUIRE NUCLEAR STATION UNIT 1

ASME SECTION XI
INSERVICE INSPECTION NDE BOUNDARY OF NITROGEN SYSTEM
(GN)

DESIGNER TIM MYERS DATE 11-7-00 INSP WAIVED DATE —
DRAWN TIM MYERS DATE 11-7-00 INSP WAIVED DATE —
CHECKED GARY D SCARBORO DATE 11-7-00 APPR R. KEVIN RHYNE DATE 12-14-00
SCALE DWG.NO. MC-ISIN-1602-01.02 REV 0

REFERENCE FLOW DIAGRAM MCFD-1602-01.02 REV. 1
ERN: MC0099Z3

D-80